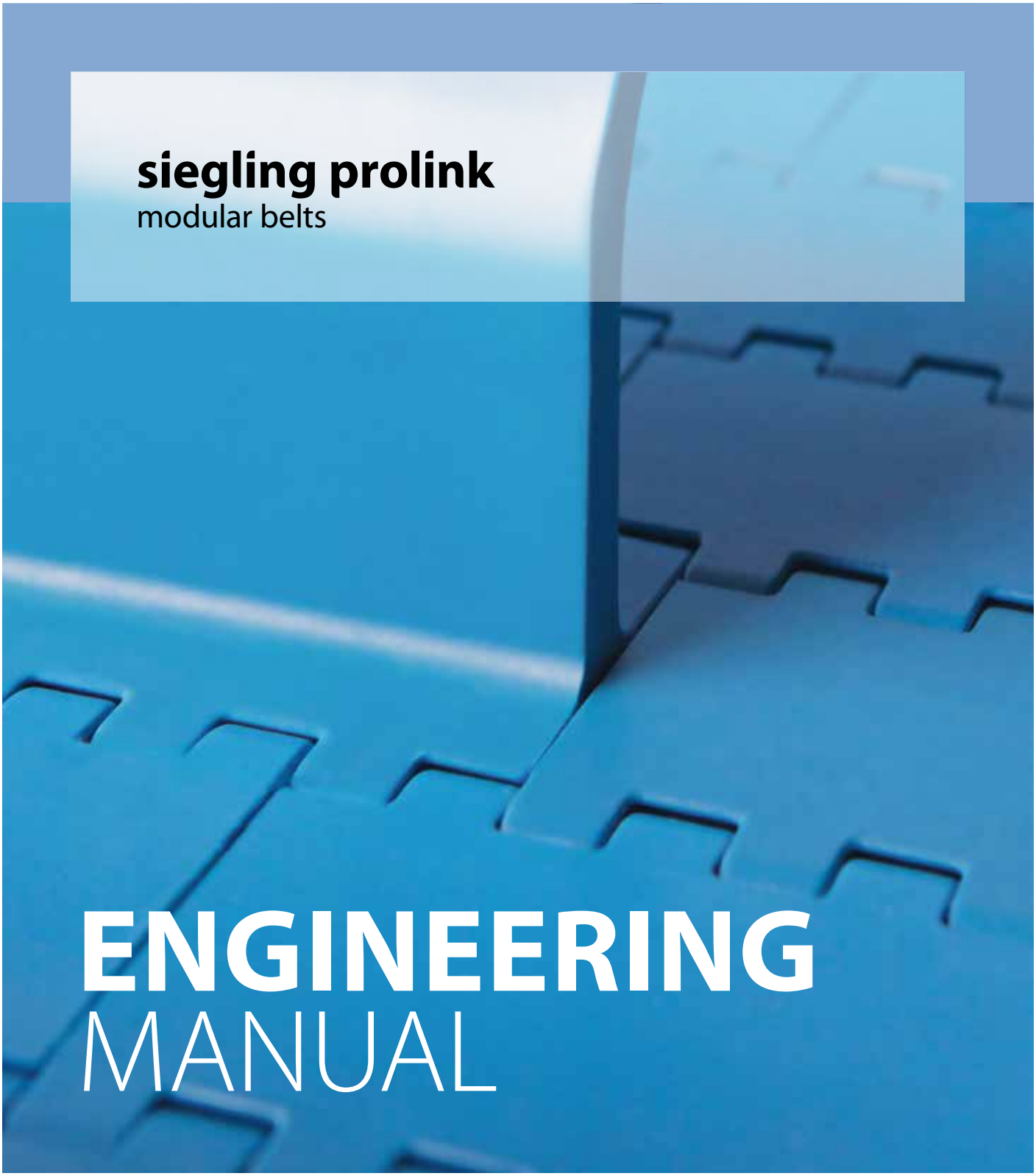

siegling prolink
modular belts

ENGINEERING MANUAL

Siegling – total belting solutions

forbo
MOVEMENT SYSTEMS

Traditional conveyor belts are often intended for generic use, but the design features of Siegling Prolink modular belts are aimed at providing specific processing and application benefits. This is why the Siegling Prolink modular belts are a perfect addition to Forbo Movement Systems existing wide range of belting products.
Our vast experience in conveying and processing applications, combined with our line of highly specialized belts ensure that we can offer optimized conveying solutions regardless of the application. The Forbo Movement Systems name is synonymous with not only superior product quality, but also with professional technical support and quality service.









INTRODUCTION TO MODULAR BELTING

Modular means adaptable

Siegling Prolink offer a wide product range with many different module designs. Modules within individual product series can easily be combined.

Because of this, Siegling Prolink modular belts can be customized to suit individual conveying and processing tasks. We will help you identify the optimal solution for your specific needs.

Siegling Prolink is used successfully in a broad range of applications in industries such as:

– fruit and vegetable processing

– baked goods manufacturing

– meat, poultry and seafood processing

– automotive and tire manufacturing

– logistics

In these areas, Siegling Prolink modular belts often play a significant role beyond conveying.

Benefits of modular belting

Modular belts are robust and durable and can handle conveying and processing tasks which may not be possible with conventional conveyor belting materials and types.

When assembled and installed, modular belts are endless, but if damage occurs, individual modules can quickly be replaced, thereby minimizing down time and maintenance costs. Modular belts can be supplied in any length and width and if needed, functional modules can be added at any time so belt properties can be changed if required.

The Siegling Prolink System – Every belt is a “specialist”!

SIEGLING PROLINK

Wide range of modules available

By working closely with end users and equipment manufacturers, our R&D department ensures that all module types in the Siegling Prolink product line can be relied upon for exceptional performance.

Our belt series include approx. 100 different types of modules that can handle most conveying and processing tasks, ranging from light to heavy duty.

Individual modules are easily assembled as endless belts by connecting them with hinge pins. This means that modular belts:

– can be made to any length and width

– are easy to repair

– require less expenditure on spare parts

Existing conveyors equipped with other types of belting can easily be converted to accommodate Siegling Prolink modular belting. In addition to a wide range of standard colors, many other colors can be supplied on request. Please inquire if you have a specific color request.

Data sheets with additional technical information about individual belt series and materials are available online. Please be aware that some of the module types shown may not be available in all surface pattern, material, and color combinations as standard products. Please inquire if you need additional information or have specific requirements.



Functionality

Custom belts are available using profiles, side guards and other accessories such as modules with different surface patterns, openings or friction pads for most Siegling Prolink belt series.

Special modules and accessories for customized uses are also available or can be developed according to customer specifications. Please contact us if you have a specific request requiring a customized conveying solution.

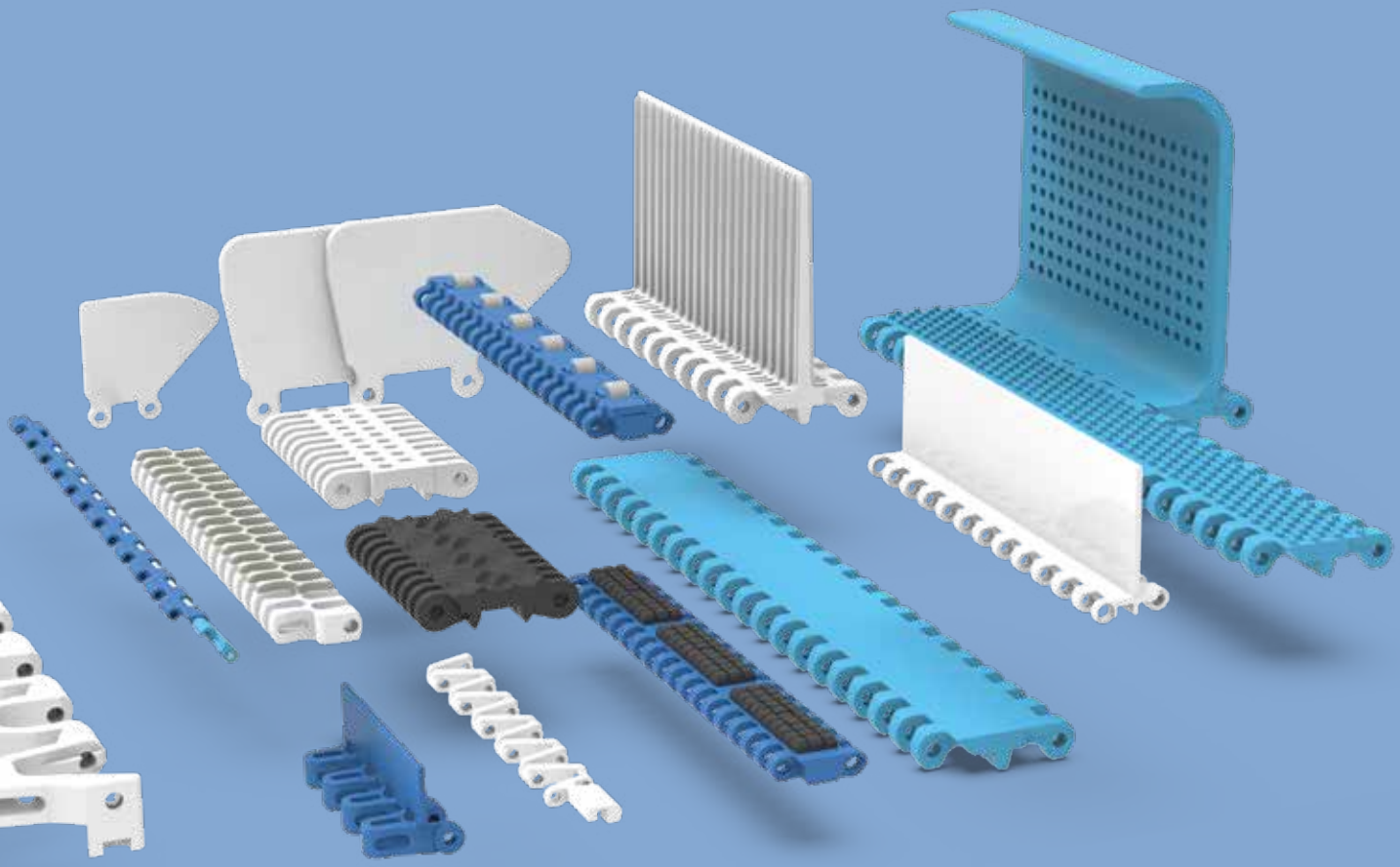

Materials

Apart from the individual module and sprocket designs, selecting the optimal material is a way to customize a belt to suit a specific conveying or processing task.

All materials are tried and tested in the most varied of industrial environments. The specific properties of the individual materials guarantee they can handle a wide range of applications.

The Siegling Prolink modular belt series are available in several standard materials (see each series for more information) and most of them can be made from any of the materials shown in chapter 2.

HACCP requirements

New regulatory requirements are forcing food manufacturers to adopt increasingly stringent hygiene standards and sanitation procedures. Conventional conveyor and processing belts often cannot comply with these requirements, but Siegling Prolink modular belts are designed to effectively support your HACCP concept.

TABLE OF CONTENTS

1 Product portfolio I-8

1.1 Modular belt series – Overview I-10
Type key I-16
Legend I-17
Straight running belts I-18
Side flexing belts I-23
1.2 Detailed series information I-25
Series 1 ..... I-26
Series 2 ..... I-38
Series 4.1 ..... I-50
Series 5 ..... I-60
Series 6.1 ..... I-84
Series 7 ..... I-104
Series 8 ..... I-116
Series 9 ..... I-134
Series 9.1 ..... I-146
Series 10 ..... I-154
Series 11 ..... I-168
Series 13 ..... I-178
Series 14 ..... I-186
Series 15 ..... I-196
Series 17 ..... I-202
Series 18 ..... I-208
Series 19 ..... I-222
1.3 Retainer rings I-230
1.4 Applications I-232
Fruit and vegetable processing I-232
Meat and poultry processing I-234
Baked goods manufacturing I-236
Seafood processing I-238
Automotive/tire manufacturing I-240
Logistics I-241
Other applications I-242

2 Materials II-1

2.1 Plastic materials (Properties) II-3
Belt material orientation chart II-6
Use of materials II-6
Temperature ranges II-7
Color codes II-9
Friction factors II-10
Declaration of compliance II-11
Siegling Prolink material identification test II-12
Fire warning for Siegling Prolink plastic modular belts II-12
Cleaning agent compatibility II-13
Chemical resistance II-13
2.2 Other Materials II-18
High-grip materials II-18
Shore hardness scale for High-grip materials II-18
Metals II-18

3 Engineering guidelines III-1

3.1 Basics III-3
Factors affecting belt life III-3
General conveyor considerations III-3
Basic terms and dimension definitions III-4
3.2 Conveyor design III-5
Shaft III-5
Drive configurations III-6
Sprockets III-9
Carryway with wearstrip III-12
3.3 Conveyor layouts III-17
Incline/Decline III-18
Decline conveying III-18
Hold Down Tabs III-19
Belt travel direction III-21
Side-flexing belts III-22
Module layout with specified inner radii (series 9.1) III-32
Spiral conveyors III-33

4 Calculations IV-1

4.1 Four step method IV-3
Calculate effective belt pull F_U IV-4
Calculate adjusted belt pull F_{adj} IV-5
Calculate admissible belt pull F_{adm} IV-6
Validation of belt selection IV-6
4.2 Calculation example IV-7
4.3 Shaft calculations IV-10
4.4 Temperature influence on belt dimensions IV-14

5 Operating instructions V-1

5.1 Preparing for the installation V-3
5.2 Sprocket installation V-4
5.3 Wearstrip arrangement curve belts V-11
5.4 Joining belt sections V-25
Series 1, 2, 4.1, 8 ..... V-25
Series 5 ..... V-25
Series 5 ST V-26
Combo belts (S5 ST and S11) V-26
Series 6.1, 10 ..... V-26
Series 7 ..... V-27
Series 9 ..... V-27
Series 9.1 ..... V-28
Series 11 ..... V-28
Series 13 ..... V-29
Series 14, 15 ..... V-29
Series 17 ..... V-30
Series 18 ..... V-30
Series 19 ..... V-31
Series 4.1 ProSnap (PSP) V-32
Series 6.1, 10 ProSnap (PSP) V-32
Series 13 ProSnap (PSP) V-32
Small plugs for extruded or steel pins (Series 4.1 and 8) V-33
Small plugs for extruded or steel pins (Series 6.1 and 10) V-33
Belts with more than one pin V-34
Alternativ option for belts with more than one pin per hinge Series 4.1, 6.1, 8, 10, 13 ..... V-34
5.5 Installing a modular belt V-35
Installation V-35
5.6 Maintenance and repair V-36
5.7 Cleaning V-37
5.8 Preventive maintenance and troubleshooting V-38
The belt is not tracking properly V-38
Sprockets do not engage correctly V-38
Excessive sprocket wear V-39
Excessive belt wear V-39
Belt stretching; excessive catenary sag V-40
Hinge pins are migrating out of the belt V-40

6 Appendix VI-1

6.1 Glossary VI-3
6.2 Glossary of symbols VI-6
6.3 Additional tables VI-9
Speed limit curve belts VI-9
Shaft dimensions for molded sprockets VI-11
Bore size dimensions at Prolink sprockets VI-12
Groove dimensions for circlips VI-13
Minimum design radii VI-15
Load index VI-17
General material data VI-17
Dimension deviation VI-18
Dimension tolerance VI-19
Drainage capacity/flow rate of Prolink belts VI-19
6.4 Conversion table metric/imperial VI-21
6.5 Assembly information VI-22
Assembly Retainer Rings VI-22
Assembly Split Sprockets VI-22
6.6 Questionnaire VI-23
Bent profiles – Specification sheet VI-24
Application check list VI-25
Spiral data form VI-27
6.7 Notes VI-31
6.8 Legal notes VI-32



1 PRODUCT PORTFOLIO

1.1 Modular belt series – Overview

1.2 Detailed series information

1.3 Retainer rings

1.4 Applications

1.1 MODULAR BELT SERIES – OVERVIEW

Siegling Prolink offers following different belt series to match your conveying needs.

Series	Pitch	Description
1	50 mm (2 in)	Medium to heavy-duty belt for industrial conveying tasks. Closed hinge design.
2	25 mm (1 in)	Light-duty belt for food, container handling and industrial use. Open hinge design.
4.1	14 mm (0.55 in)	Light to medium-duty belt for food and non-food use. Small pitch allows tight product transfers using nose bars or sprockets. Open hinge design.
5	25 mm (1 in)	Light to medium-duty radius and spiral belt with stainless steel hinge pins. Exceptionally strong and versatile side flexing belt with large open area.
6.1	50 mm (2 in)	Medium to heavy-duty belt designed specifically for tasks requiring the highest hygiene standards in meat, poultry and seafood processing, including cutting, deboning and skinning lines. Easy to clean. Open hinge design.
7	40 mm (1.6 in)	Heavy-duty belt with superior pull strength and excellent durability for industrial applications. Designed for heavy loads, such as worker belts for the automotive industry, vehicle conveying, etc. Closed hinge design.
8.1	25.4 mm (1 in)	Medium to heavy-duty belt for industrial applications. Closed hinge design.
9	50 mm (2 in)	Medium to heavy-duty radius and spiral belt with stainless steel hinge pins. Exceptionally strong and versatile side flexing belt with large open area.
9.1	50 mm (2 in)	Medium to heavy-duty spiral belt with stainless steel hinge pins. Exceptionally strong side flexing belt with large open area, clip-free design and adjustable belt radius of 1.3 to 2.9 x belt width.
10	25.4 mm (1 in)	Light to medium-duty belt for hygiene-sensitive products. Easy to clean. Open hinge design.
11	25 mm (1 in)	Side flexing belt for conveying lightweight products. This lightweight belt has an exceptionally low turn radius of 1.4 x belt width.
13	8 mm (0.31 in)	Light-duty micro pitch belt for food and non-food tight-transfer nose bar use. Open hinge design.
14	12.7 mm (0.5 in)	Medium-duty belt for food and non-food use. Small pitch allows tight product transfers. Bottom design optimized for nose bars. Strong closed hinge design.
15	12.7 mm (0.5 in)	Light-duty belt for food applications utilizing 12.7 mm (0.5 in) nose bars
17	25.4 mm (1 in)	Medium to heavy-duty belt for industrial applications. Closed hinge design.
18	25.4 mm (1 in)	Light to medium-duty belt for food and non-food applications
19	63.5 mm (2.5 in)	Exceptionally strong, flexible-to-configure solution for heavy-load assembly lines (HEAL). This steel-reinforced plastic modular belt delivers superior strength, reliable performance and consistently low running costs.

Each belt series is offered in several different surfaces types such as Flat Top, Grid Top, Nub Top, Cone Top, Non skid and Friction Top combined with variations in the open area. The availability of so many different options guarantees that specific requirements can be met.

The following tables will help you choose the right series.

Please note: Series 3 is replaced by Series 6.1 offering same options in higher quality and improved cleanability.

Belt surface options

Use/requirement	Key	Explanation
Standard conveying	FLT 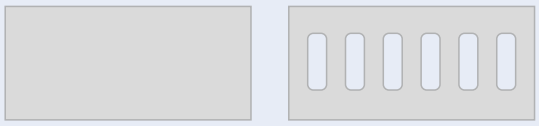	**Flat top** Smooth flat surface for general conveying with no specific surface requirements. Flat top surfaces can have openings.
Extra grip	CTP 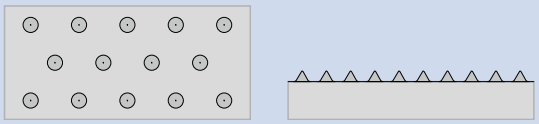	**Cone top** Small cones that grip soft products, such as meat, to ensure efficient conveying, even in light incline applications.
	FRT 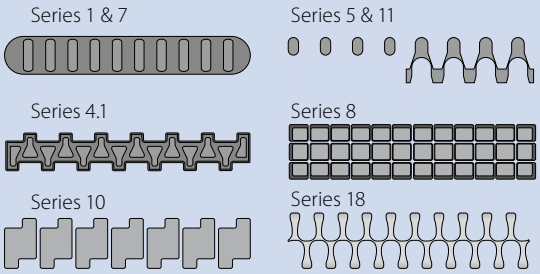	**Friction top** Rubber inlays create more friction between the belt surface and the conveyed product. The style and design of the rubber inlays vary by series.
Conveying people	NSK 	**Non skid** Specially designed non skid surface provides extra grip and prevents slipping even in wet and dirty environments.
	SRS 	**Slip resistant surface** Convenient surface for conveying people where minimal slip resistance is required.
Superior product release and minimum surface contact	NPY 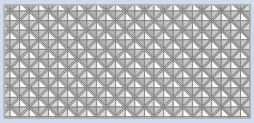	**Negative pyramid pattern** Reduced contact area for better release of soft products, e.g. sticky dough.
	RAT 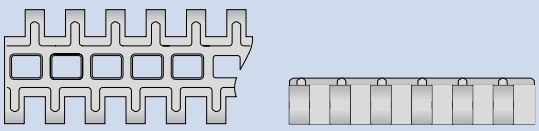	**Radius top** Raised, rounded edges reduce the contact area to ensure improved product release combined with improved product cooling and reduced friction.
	NTP 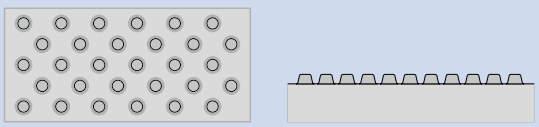	**Nub top** Small nubs significantly reduce the contact area between the belt and the product. Superior surface for non-stick uses, e.g. leafy vegetables.
	RSA 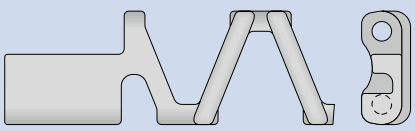	**Reduced surface area** Reduced surface area will lift products to the surface to ensure superior airflow

Continued on next page

1.1 MODULAR BELT SERIES – OVERVIEW

Continued from previous page

Use/requirement	Key	Explanation
Dewatering and cooling	GRT 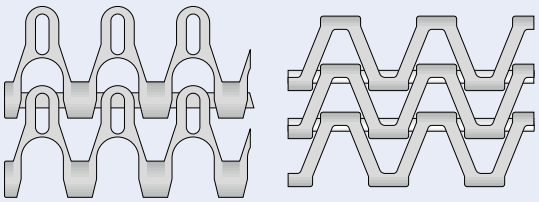	**Grid top** Flat surface with large openings (> 45 %)
	FLT 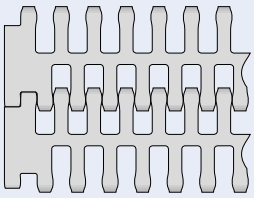	**Flat top** Flat surface with large openings
	RRB 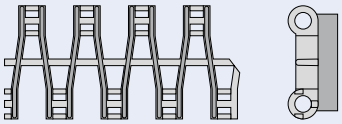	**Raised rib** Used with finger transfer plates to eliminate product tippage
	CUT 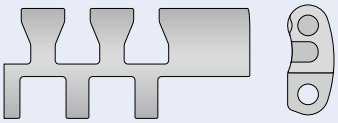	**Curved top** Reduce movements of conveyed products. Can be used with belt scrapper at the drive due to circumference that's created when flexing over sprockets.
Better transport incline	LRB 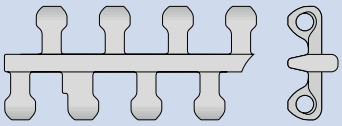	**Lateral rib** For incline uses when conveying delicate products.
Reduced surface friction prependicular to belt travel	RTP A90 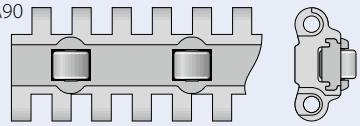	**RTP A90** Roller Top A90 for cross shifting materials from or onto a belt 90° from running direction
Save floor space and allow uninterrupted side transfer	HDK 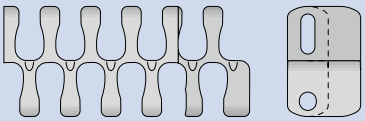	**High Deck** Allows utilization of entire belt width and beyond

Available surfaces for each series

Surface pattern	Series																	
	1	2	4.1	5	6.1	7	8	8.1	9	9.1	10	11	13	14	15	17	18	19
CTP (Cone top)					●								●				●	
CUT (Curved top)														●				
FLT (Flat top)	●	●	●		●	●		●			●		●	●		●		
FRT (Friction top)	●	●	●	●	●	●	●				●	●		●			●	
GRT (Grid top)		●		●					●	●		●			●		●	
GRT G (Grid top guided)				●					●								●	
GRT RG (Grid top reverse guided)				●														
GRT HD (Grid top Hold Down caps)												●						
GRT ST (Grid top strong)				●														
HDK (High Deck)																	●	
LRB (Lateral rib)											●							
NPY (Negative pyramid)			●										●					
NSK (Non skid)	●					●		●										
NTP (Nub top)			●	●	●				●		●							
RAT (Radius top)								●										
RRB (Raised rib)		●																
RSA (Reduced surface area)															●			
SRS (Slip-resistant surface)	●					●		●								●		●
RTP (Roller top)							●											

Available open percentage for each series

Belt opening	Series																	
	1	2	4.1	5	6.1	7	8	8.1	9	9.1	10	11	13	14	15	17	18	19
0 % (Closed)	●	●	●		●	●	●	●			●		●	●		●		●
1 % – 10 %						●												
11 % – 20 %	●	●																
21 % – 30 %			●		●			●			●			●				
31 % – 40 %				●	●						●	●	●					
> 40 %		●		●					●	●		●			●		●	

The percentage indicates the relation of bright area to shadow, if the module is beamed with light

1.1 MODULAR BELT SERIES – OVERVIEW

Accessories available for each series

Accessories	Series																	
	1	2	4.1	5	6.1	7	8	8.1	9	9.1	10	11	13	14	15	17	18	19
FLT GT (Flat top with guiding tabs)								●										
Profiles	●	●	●	●	●		●		●	*	●	●		●		●	●	
– Scooped molded					●													
– Scooped bent	*	*	*	*	*		*		*	*	*	*		*				
Side guards	●	●		●	●		●	●	●		●						●	
Finger plates		●																
Hold Down Tabs					●		●	●			●							
Adjustable inner radius									●	*								
Ball-bearing modules				●														
PRR (Pin retained rollers)	*	*	*	*	●	●		●	*	*	*			●			*	
Wheelstopper						●												●
ProSnap			●		●						●		●					
REL (Reinforcement Link)																		●

* on request

1.1 MODULAR BELT SERIES – OVERVIEW

Type key*

	Series ①		Open area/Sprocket size ②	Surface pattern ③	Type ④	Style ⑤	Material ⑥	Color ⑦	Height/Diameter/Bore size and style ⑧	Length/Width ⑨	Cap material and color ⑥⑦	
1	S6.1	-	Z10		SPR	V2	PA	LG	SQ40mm			(page I-93)
2	S4.1	-	0	NPY			PP	BL				(page I-53)
3	S9	-	45	GRT	SMR	SG	POM	UC	H25	W50		(page I-143)
4	S11	-	45	GRT	CCW		POM-CR	WT			(POM WT/BL)	(page I-173)

* Not every product requires all characteristics (within the designation). If there is an irrelevant characteristic, this category will be ignored and replaced by the following one.

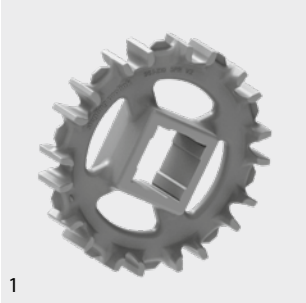
1


3

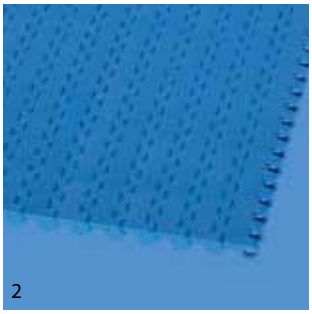
2

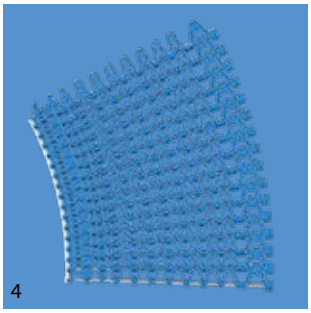
4

Legend

① Series
S1 … S19

② Open area/Sprocket size
Percentage open area Format: xx E.g. 20 = 20 %
For sprockets: number of teeth Format: "Z"xx E.g. Z12 = 12 teeth

③ Surface pattern	
BSL	Base module for slider
CTP	Cone top
CUT	Curved top
FLT	Flat top (smooth)
FRT-OG	Friction top without High Grip insert
FRT(X)	Friction top (Design X)
GRT	Grid top
HDK	High Deck
LRB	Lateral rib
MOD	Modified module shape
NCL	No cling
NPY	Negative pyramid
NSK	Non skid
NSK2	Non skid, nonwoven variant
NTP	Nub top (round studs)
PRR	Pin Retained Rollers
RAT	Radius top
RRB	Raised rib
RSA	Reduced surface area
RTP	Roller top
SRS	Slip-resistant surface

④ Type	
BPU	Bucket profile
CAP	Pin lock & belt edge sealing
CCW	Counter clockwise
CLP	Clip
CM	Center module
CW	Clockwise
FPL	Finger plate
HDT	Hold Down Tab
IDL	Idler
INS	Insert
PIN	Coupling rod
PMC	Profile module center
PMU	Profile module universal
PSP	ProSnap
PSU-0	Prof. scoop uni. closed
PSU-X	Prof. scoop uni. x% open
RI	High Grip insert
REL	Reinforcement Link (SS)
ROL	Rollers
RTR	Retaining ring
SG	Module with sideguard
SGL	Side guard, left
SGR	Side guard, right
SLI	Slider
SMA	Side module, A side
SMB	Side module, B side
SML	Side module, left
SMR	Side module, right
SMT	Side module, tight radius
SMU	Side module, universal/both sides
SPR	Sprocket
SPR-SP	Split sprocket, 2-part
SSL	Self stacker side module, left
SSR	Self stacker side module, right
TPL	Turning panel, left
TPR	Turning panel, right
UM	Universal module
WSC	Wheel Stopper Center
WSS	Wheel Stopper Side

⑤ Style	
1.6	1.6 collapse factor
1.7	1.7 collapse factor
2.2	2.2 collapse factor
2.2 G	2.2 collapse factor, guided
A90	Angle 90° to conveying direction
BT	Bearing tab
DR	Double row sprocket
F1, F2, F3 …	Collapse factor modules
G	Guided
GT	Guiding tabs
HD	Hold Down
HR	Hard removable pin
Ixx	xx = indent in mm
RG	Reversed guided
SG	Side guard
SP	Split sprocket
ST	Strong
V2	Version 2 indicates a design update

⑥ Material	
PA	Polyamide
PA-FR	Polyamide flame retadant
PA-FRHC	Polyamide, flame retadant, high conductive
PA-HT	Polyamide high temperature
PBT	Polybutylenterephthalate
PE	Polyethylene
PE-I	PE impact resistant
PE-MD	PE metal detectable
PK	Wear & impact improved polymer
PLX	Special PK for pins with small diameter – higher stiffness
POM	Polyoxymethylene (Polyacetal)
POM-CR	POM cut resistant
POM-HC	POM highly conductive
POM-MD	POM metal detectable
POM-PE	POM side modules + PE center modules
POM-PP	POM side modules + PP center modules
PP	Polypropylene
PP-MD	PP metal detectable
PP-SW	PP steam and hot water resistant
PXX-HC	Self-extinguishing highly conductive material
R1	TPE 80 Shore A, PP
R2	EPDM 80 Shore A, vulcanized
R3	TPE 70 Shore A, POM
R4	TPE 86 Shore A, PP
R5	TPE 52 Shore A, PP
R6	TPE 63 Shore A, POM
R7	TPE 50 Shore A, PP
R8	TPE 55 Shore A, PE
R11	TPE 50 Shore A, POM
SER	Self-extinguishing TPE
SS	Stainless steel
SSS	Stainless steel acid resistant
TPC1	Themoplastic Copolyester
-HA	Supports the HACCP concept
HW	High Wear resistant material

⑦ Color*	
AT	Anthracite
BG	Beige
BK	Black
BL	Blue
DB	Dark blue
GN	Green
LB	Light blue
LG	Light gray
OR	Orange
RE	Red
TQ	Turquoise
UC	Uncolored
WT	White
YL	Yellow

⑧ Height/Diameter/ Bore size and style
Height in mm (in) Format: Hxxx Pin diameter in mm (in) Format: Dxxx
Bore size: SQ (= square) or RD (= round) either in mm or inches Format: SQxxMM or RDxxIN

⑨ Length/Width
Pins Length in mm (in) Format: Lxxx Module width in mm (in) Format: Wxxx REL in mm one decimal Format: Wx.x

* For each series' standard colors please refer to the table of materials for each belt (chapter 1.2). A number of other colors are available on request. Colors can vary from the original due to the print, production processes or material used.

1.1 MODULAR BELT SERIES – OVERVIEW

Straight running belts

Pitch 8 mm (0.31 in)



S13 | 0 % open | Flat Top

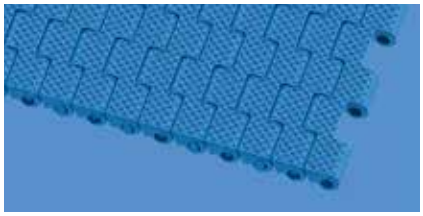

S13 | 0 % open | Negative Pyramid

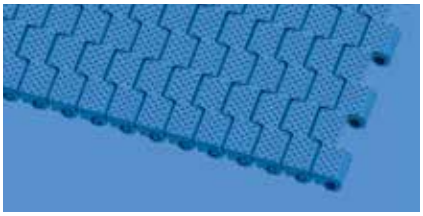

S13 | 0 % open | Cone Top



S13 | 34 % open | Flat Top

Pitch 12.7 mm (0.5 in)

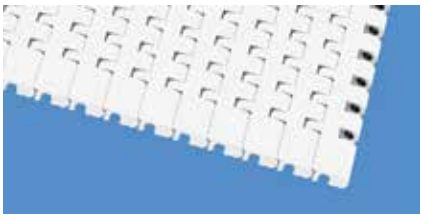

S14 | 0 % open | Flat Top



S14 | 25 % open | Flat Top

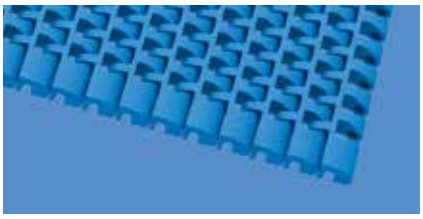

S14 | 25 % open | Curved Top

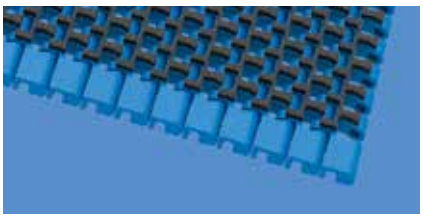

S14 | 25 % open | Friction Top 1

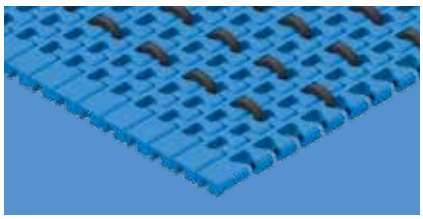

S14 | 25 % open | FLT with PRR

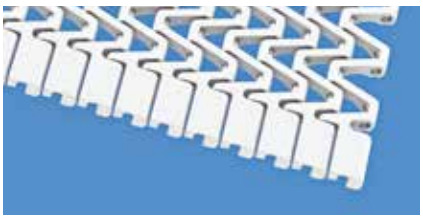

S15 | 47 % open | Grid Top



S15 | 47 % open | Reduced surface area

Pitch 14 mm (0.55 in)



S4.1 | 0 % open | Flat Top



S4.1 | 0 % open | Negative Pyramid

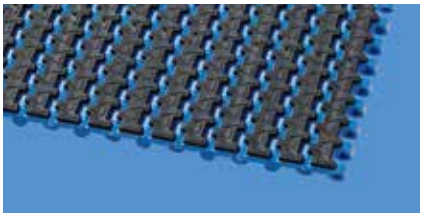

S4.1 | 0 % open | Friction Top 1

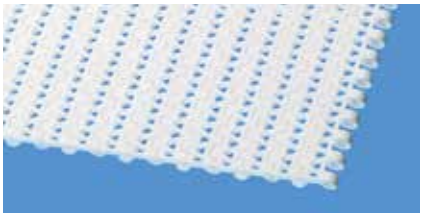

S4.1 | 21 % open | Flat Top

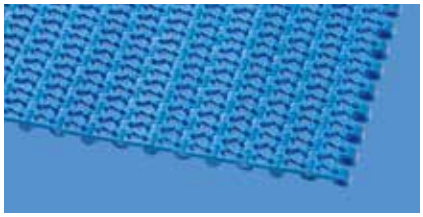

S4.1 | 21 % open | Nub Top

Pitch 25 mm (1 in)



S2 | 0 % open | Flat Top

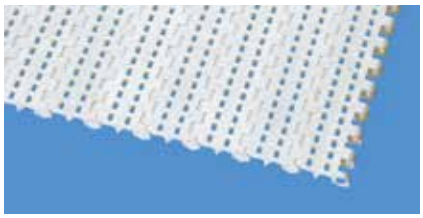

S2 | 12 % open | Flat Top



S2 | 57 % open | Grid Top



S2 | 57 % open | Raised Rib



S2 | 0 % open | Friction Top 1

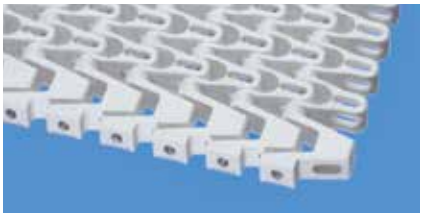

S5 | 45 % open | Grid Top

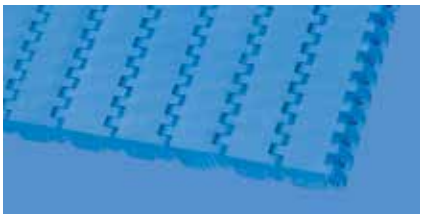

S8.1 | 0 % open | Flat Top

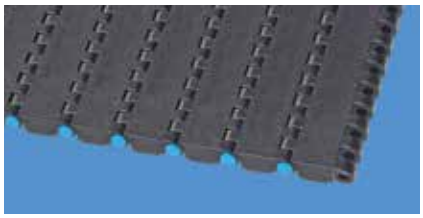

S8.1 | 0 % open | Slip-resistant



S8.1 | 0 % open | Non Skid

Continued on next page

1.1 MODULAR BELT SERIES – OVERVIEW

Straight running belts

Pitch 25 mm (1 in)

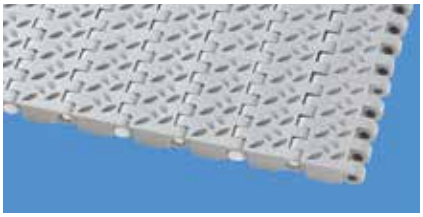

S8.1 | 0 % open | Non Skid 2

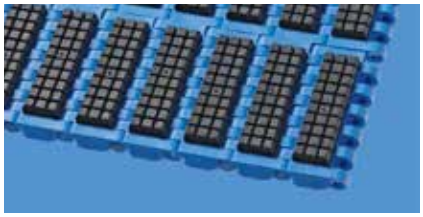

S8 | 0 % open | Friction Top 1

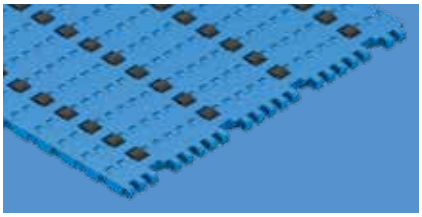

S8.1 | 0 % open | FLT with PRR

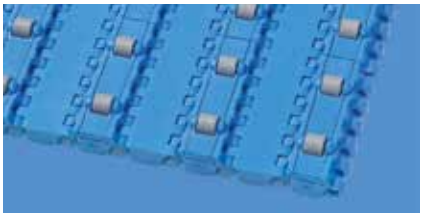

S8 | 0 % open | Roller Top A90

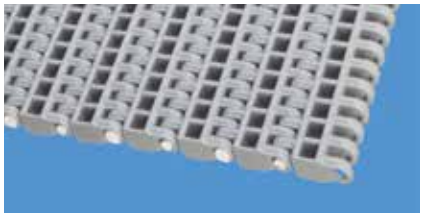

S8 | 25 % open | Radius Top

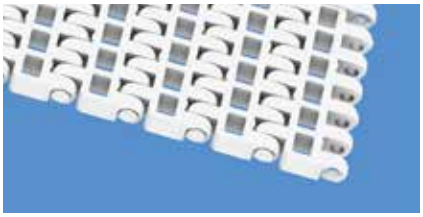

S8.1 | 30 % open | Flat Top

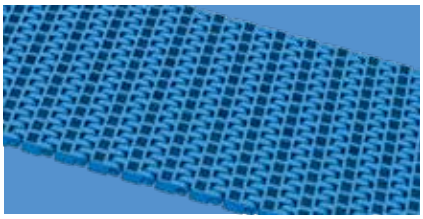

S8.1 | 30 % open | Flat Top · guided



S10 | 0 % open | Flat Top

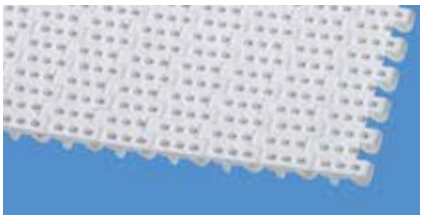

S10 | 0 % open | Nub Top

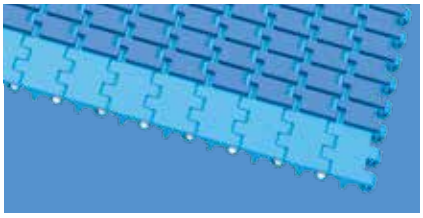

S10 | 0 % open | Friction Top 1

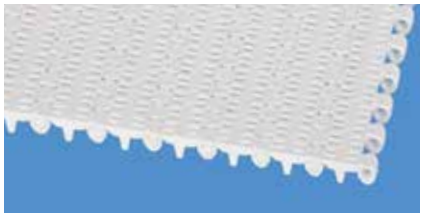

S10 | 22 % open | Flat Top

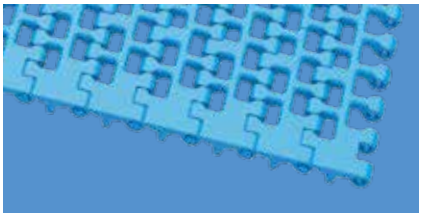

S10 | 36 % open | Flat Top

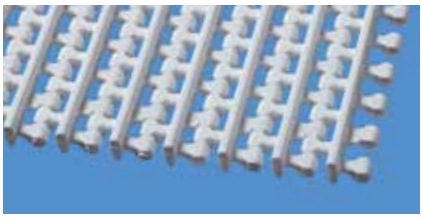

S10 | 36 % open | Lateral Rib

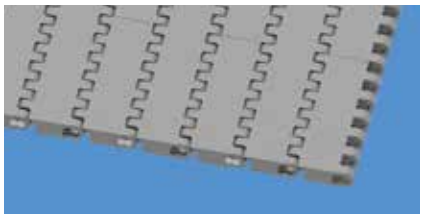

S17 | 0 % open | Flat Top

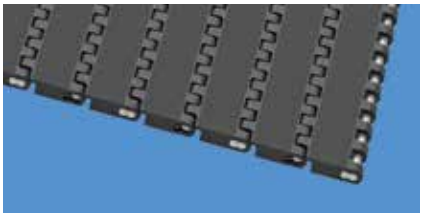

S17 | 0 % open | Slip-resistant

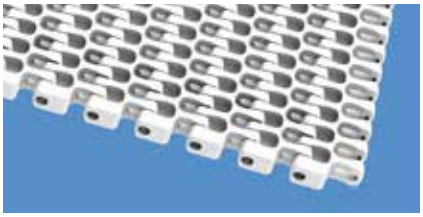

S18 | 44 % open | Grid Top 2.2

Pitch 40 mm (1.6 in)

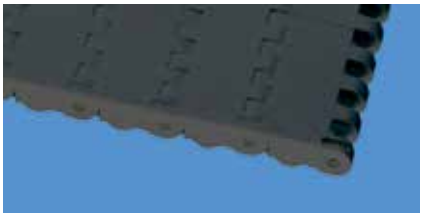

S7 | 0 % open | Flat Top



S7 | 0 % open | Slip-resistant



S7 | 0 % open | Non Skid

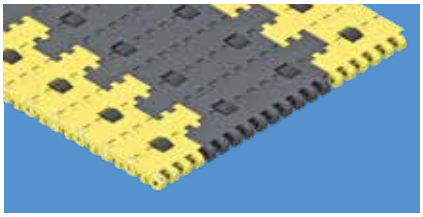

S7 | 0 % open | FLT with PRR



S7 | 0 % open | Friction Top 1

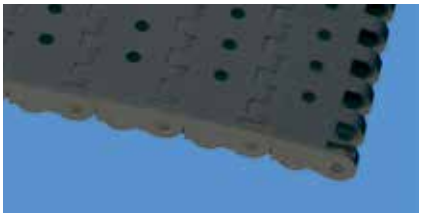

S7 | 6 % open | Flat Top

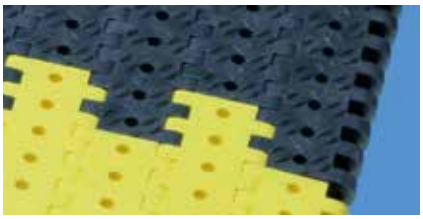

S7 | 6 % open | Non Skid

Pitch 50 mm (2 in)



S1 | 0 % open | Flat Top

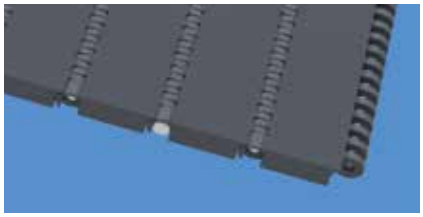

S1 | 0 % open | Slip-resistant



S1 | 0 % open | Non Skid



S1 | 0 % open | Friction Top 1



S1 | 18 % open | Flat Top



S6.1 | 0 % open | Flat Top

Continued on next page

1.1 MODULAR BELT SERIES – OVERVIEW

Straight running belts

Pitch 50 mm (2 in)



S6.1 | 0 % open | Nub Top



S6.1 | 0 % open | Cone Top

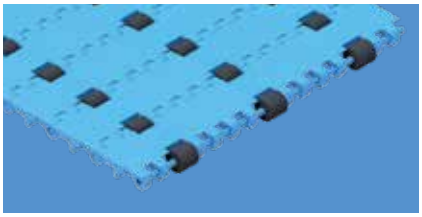

S6.1 | 0 % open | FLT with PRR

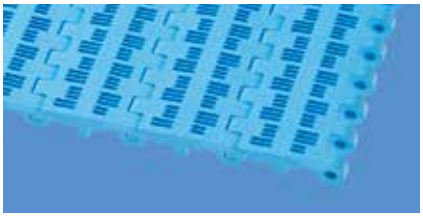

S6.1 | 21 % open | Flat Top

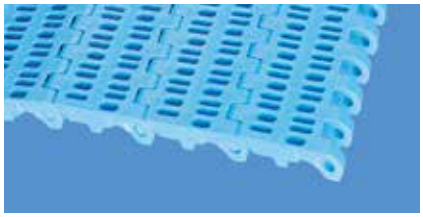

S6.1 | 23 % open | Flat Top

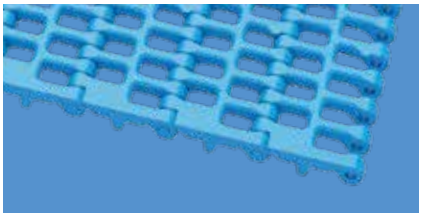

S6.1 | 36 % open | Flat Top

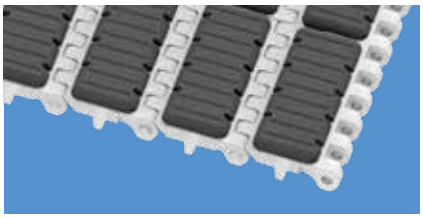

S6.1 | 0 % open | Friction Top 1



S9 | 57 % open | Grid Top

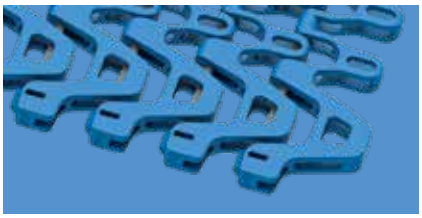

S9.1 | 57 % open | Grid Top

Pitch 63.5 mm (2.5 in)

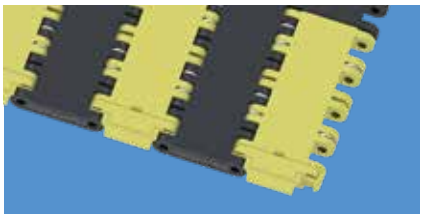

S19 | 0 % open | Slip-resistant

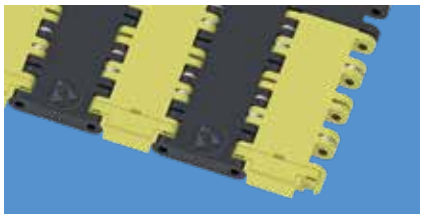

S19 | 0 % open | Slip-resistant, highly conductive

Side flexing belts

Pitch 25 mm (1 in)



S5 | 33 % open | Friction Top 2



S5 | 39 % open | Friction Top 1



S5 | 45 % open | Grid Top



S5 | 45 % open | Grid Top Guided



S5 | 45 % open | Grid Top Reverse Guided



S5 | 45 % open | Grid Top Strong



S5 | 45 % open | Nub Top



S5 | 45 % open | Bearing Tab Module

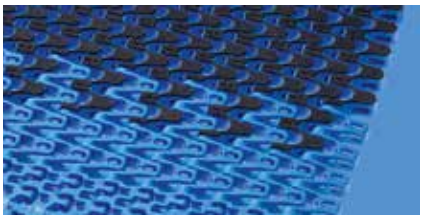

S11 | 33 % open | Friction Top 2



S11 | 45 % open | Grid Top

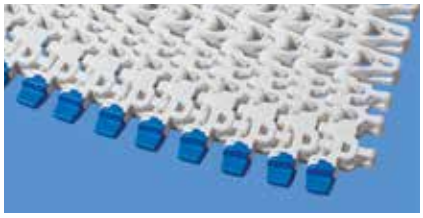

S11 | 45 % open | Hold Down Caps

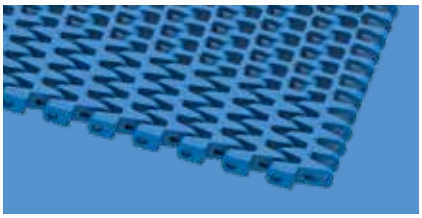

S18 | 44 % open | Grid Top 1.7

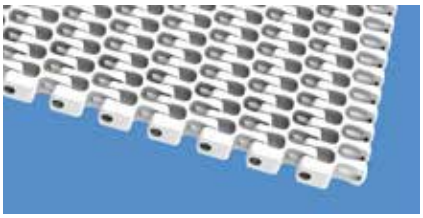

S18 | 44 % open | Grid Top 2.2

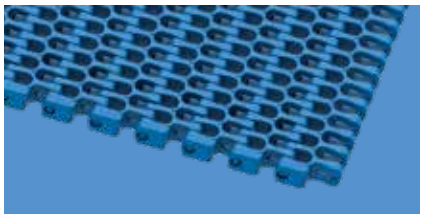

S18 | 44 % open | Grid Top 2.2 Guided

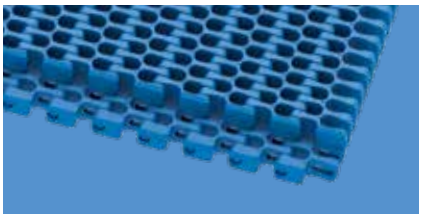

S18 | 44 % open | High Deck 2.2

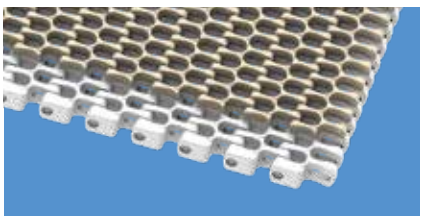

S18 | 44 % open | Friction Top 1

1.1 MODULAR BELT SERIES – OVERVIEW

Side flexing belts

Pitch 50 mm (2 in)



S9 | 57 % open | Grid Top



S9 | 57 % open | Grid Top Guided



S9 | 57 % open | Nub Top



S9.1 | 57 % open | Grid Top

1.2 DETAILED SERIES INFORMATION

In this chapter each belt type is described in detail with all necessary information such as surface type, opening percentage, dimensions, stock availability and specific conveyor design parameters.

There is a dedicated section for each individual belt series. An introduction page provides the general features of the series, followed by single page presentations of all existing types of the series. At the end of the section for each series, the available accessories are shown.

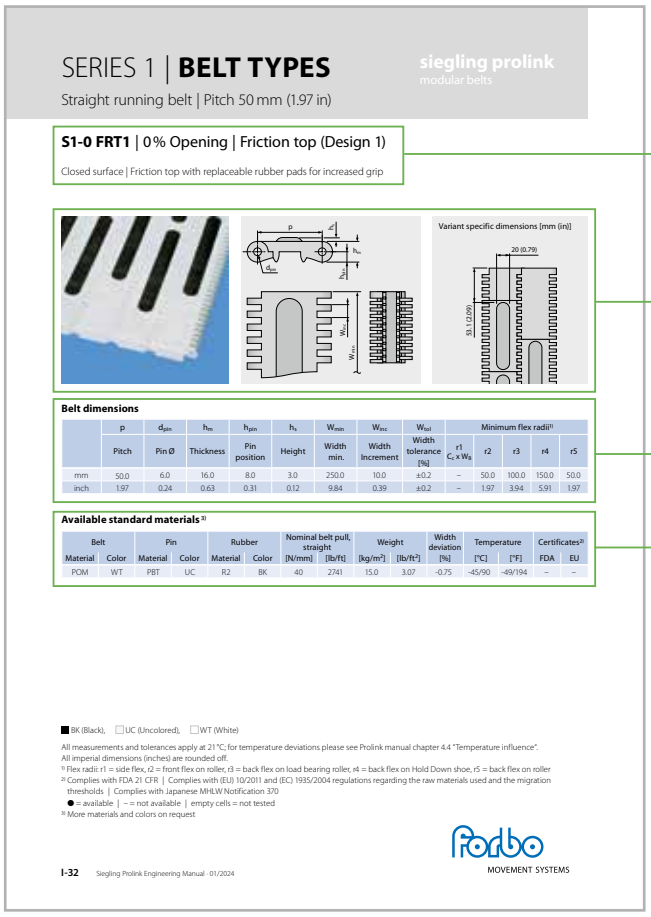

SERIES 1 | **BELT TYPES**

siegling prolink
modular belts

Straight running belt | Pitch 50 mm (1.97 in)

S1-0 FRT1 | 0 % Opening | Friction top (Design 1)

Closed surface | Friction top with replaceable rubber pads for increased grip

Variant specific dimensions [mm (in)]

Belt dimensions

	p	d_{pin}	h_m	h_{pin}	h_s	W_{min}	W_{inc}	W_{tol}	Minimum flex radii[1]				
	Pitch	Pin Ø	Thickness	Pin position	Height	Width min.	Width increment	Width tolerance [%]	r1 $C_r \times W_B$	r2	r3	r4	r5
mm	50.0	6.0	16.0	8.0	3.0	250.0	10.0	±0.2	–	50.0	100.0	150.0	50.0
inch	1.97	0.24	0.63	0.31	0.12	9.84	0.39	±0.2	–	1.97	3.94	5.91	1.97

Available standard materials [3]

Belt		Pin		Rubber		Nominal belt pull, straight		Weight		Width deviation	Temperature		Certificates[2]	
Material	Color	Material	Color	Material	Color	[N/mm]	[lb/ft]	[kg/m²]	[lb/ft²]	[%]	[°C]	[°F]	FDA	EU
POM	WT	PBT	UC	R2	BK	40	2741	15.0	3.07	-0.75	-45/90	-49/194	–	–

■ BK (Black), □ UC (Uncolored), □ WT (White)

All measurements and tolerances apply at 21 °C; for temperature deviations please see Prolink manual chapter 4.4 "Temperature influence".
All imperial dimensions (inches) are rounded off.
[1] Flex radii: r1 = side flex, r2 = front flex on roller, r3 = back flex on load bearing roller, r4 = back flex on Hold Down shoe, r5 = back flex on roller
[2] Complies with FDA 21 CFR | Complies with (EU) 10/2011 and (EC) 1935/2004 regulations regarding the raw materials used and the migration thresholds | Complies with Japanese MHLW Notification 370
● = available | – = not available | empty cells = not tested
[3] More materials and colors on request

Forbo MOVEMENT SYSTEMS

I-32 Siegling Prolink Engineering Manual · 01/2024

Belt type naming

Belt-specific properties, picture and drawing

Main dimensions, design recommendations

Belt materials and color, basic physical properties, compliances

Note: Please be aware that belt widths can be achieved and are calculated using minimum belt widths and multiples of width increments only. Furthermore, belt widths vary depending on the choice of material.
All dimensions are measured at 21° Celsius (69.8° Fahrenheit). Always consider the thermal expansion coefficient of the material. Belt widths change with temperature. For actual belt widths under your specific operating conditions, request information from your local Forbo Movement Systems representative. More information is given in Section 4.4.

Note: Dimensions r1 to r5 refer to the minimum design radius of belt turns and support rollers.
Dimensions are as follows: r1 = side flex radius, r2 = front flex on roller, r3 = back flex on load bearing roller, r4 = back flex on hold-down shoe, r5 = back flex on roller. For further explanations see "Minimum design radii" in Appendix 6.3.

Dimensions in mm and inches (in). All imperial dimensions (inches) are rounded off.

siegling prolink
modular belts

SERIES 1

Straight running belts
Pitch 50 mm (1.97 in)

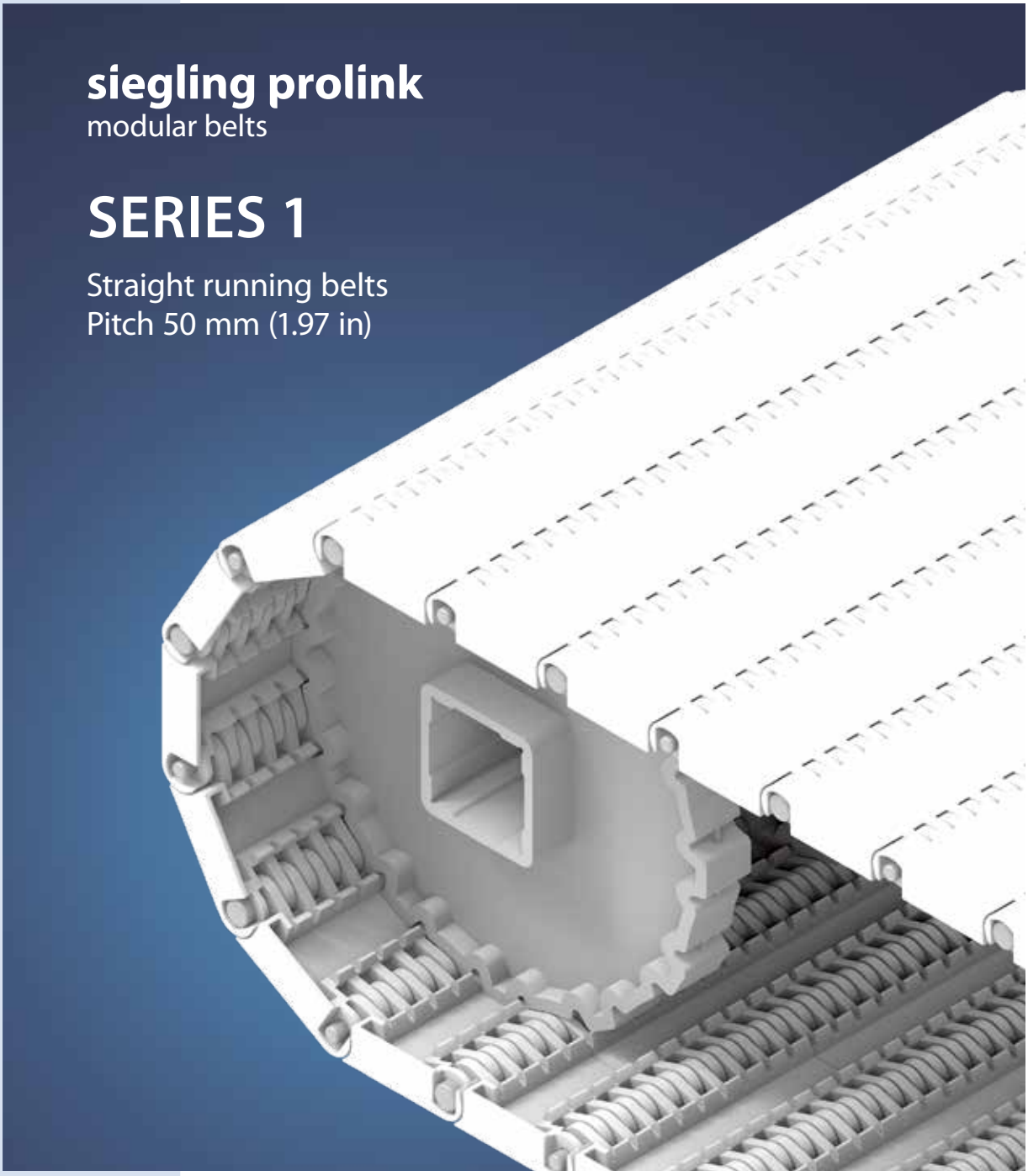

Belts for medium to heavy-duty industrial conveying applications

Side view scale 1:1

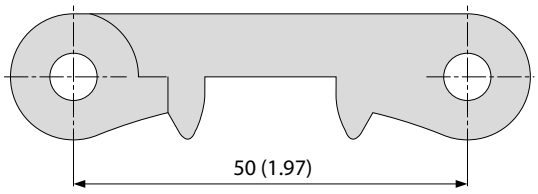

Design characteristics

- Narrow, closed hinge design provides high belt pull capacity
- Rigid module design makes belt suitable for long conveyors
- Closed solid edge design

Basic data

Pitch	50 mm (1.97 in)
Belt width min.	80 mm (3.15 in) 250 mm (9.8 in) for belts with FRT-pattern (side modules only available without FRT-pattern)
Width increments	10 mm (0.4 in)
Hinge pins	6 mm (0.24 in) made of plastic (PBT, PP, PE). One-piece up to a belt width of 1200 mm (47 in).

Available surface pattern and opening area

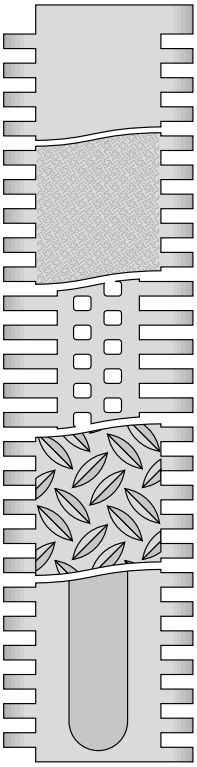

S1-0 FLT
Closed, smooth surface

S1-0 SRS
Closed, slip-resistant surface

S1-18 FLT
Open (18 %), smooth surface

S1-0 NSK
Closed surface and non skid pattern

S1-0 FRT1
Closed surface with friction top

Sprockets
in different sizes with round or square bore

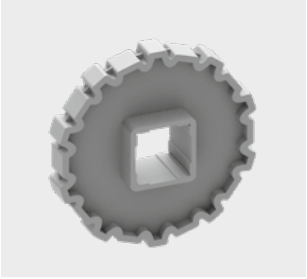

Profiles
in different heights and designs for inclines

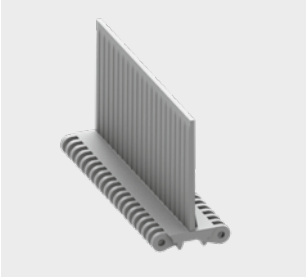

Side guards
in different heights for retention of bulk products



S1-0 FLT | 0 % Opening | Flat top

Closed, smooth surface | Flat top surface



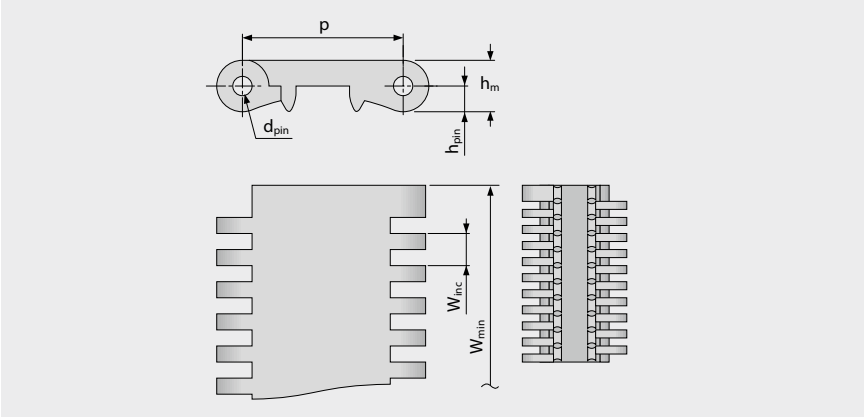

Belt dimensions

	p	d_{pin}	h_m	h_{pin}	h_s	W_{min}	W_{inc}	W_{tol}	Minimum flex radii[1]				
	Pitch	Pin Ø	Thickness	Pin position	Height	Width min.	Width Increment	Width tolerance [%]	r1 C_c x W_B	r2	r3	r4	r5
mm	50.0	6.0	16.0	8.0	0.0	80.0	10.0	±0.2	–	50.0	100.0	150.0	50.0
inch	1.97	0.24	0.63	0.31	0.0	3.15	0.39	±0.2	–	1.97	3.94	5.91	1.97

Available standard materials [3]

Belt		Pin		Nominal belt pull, straight		Weight		Width deviation	Temperature		Certificates[2]		
Material	Color	Material	Color	[N/mm]	[lb/ft]	[kg/m²]	[lb/ft²]	[%]	[°C]	[°F]	FDA	EU	MHLW
PE	WT	PE	UC	18	1233	10.1	2.07	-0.35	-70/65	-94/149	●	●	●
POM	WT	PBT	UC	40	2741	14.4	2.95	-0.75	-45/90	-49/194	●	●	●
POM	AT	PBT	UC	40	2741	14.4	2.95	-0.75	-45/90	-49/194			
PP	WT	PP	WT	30	2056	9.4	1.93	0.0	5/100	41/212	●	●	●
PP	AT	PP	WT	30	2056	9.4	1.93	0.0	5/100	41/212			

■ AT (Anthracite), ■ BK (Black), □ UC (Uncolored), □ WT (White)

All measurements and tolerances apply at 21 °C; for temperature deviations please see Prolink manual chapter 4.4 "Temperature influence".
All imperial dimensions (inches) are rounded off.

[1] Flex radii: r1 = side flex, r2 = front flex on roller, r3 = back flex on load bearing roller, r4 = back flex on Hold Down shoe, r5 = back flex on roller

[2] Complies with FDA 21 CFR | Complies with (EU) 10/2011 and (EC) 1935/2004 regulations regarding the raw materials used and the migration thresholds | Complies with Japanese MHLW Notification 370
● = available | – = not available | empty cells = not tested

[3] More materials and colors on request

S1-0 SRS | 0 % Opening | Slip-resistant surface

Closed surface | Slip-resistant surface, pleasant to walk and kneel on

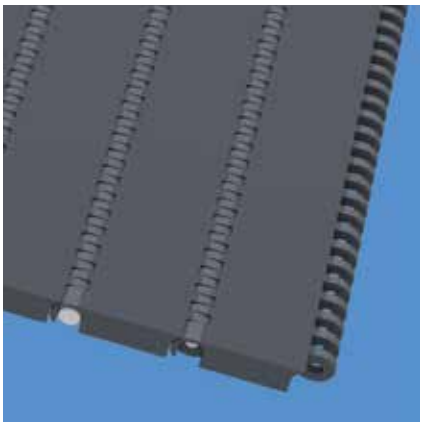

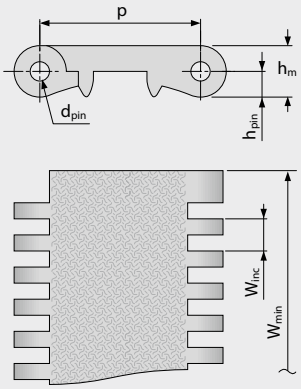

Belt dimensions

	p	d_{pin}	h_m	h_{pin}	h_s	W_{min}	W_{inc}	W_{tol}	Minimum flex radii[1]				
	Pitch	Pin Ø	Thickness	Pin position	Height	Width min.	Width Increment	Width tolerance [%]	r1 C_c x W_B	r2	r3	r4	r5
mm	50.0	6.0	16.0	8.0	0.0	80.0	10.0	±0.2	–	50.0	100.0	150.0	50.0
inch	1.97	0.24	0.63	0.31	0.0	3.15	0.39	±0.2	–	1.97	3.94	5.91	1.97

Mold to order belts [3]

Belt		Pin		Nominal belt pull, straight		Weight		Width deviation	Temperature		Certificates[2]		
Material	Color	Material	Color	[N/mm]	[lb/ft]	[kg/m²]	[lb/ft²]	[%]	[°C]	[°F]	FDA	EU	MHLW
POM	AT	PBT	UC	40	2741	14.4	2.95	-0.75	-45/90	-49/194			
POM-HC	AT	PBT	UC	40	2741	14.8	3.03	-0.75	-45/90	-49/194	–	–	
PXX-HC	BK	PBT	UC	20	1370	10.3	2.11	0.0	5/100	41/212	–	–	

■ AT (Anthracite), ■ BK (Black), □ UC (Uncolored)

All measurements and tolerances apply at 21 °C; for temperature deviations please see Prolink manual chapter 4.4 "Temperature influence".
All imperial dimensions (inches) are rounded off.

[1] Flex radii: r1 = side flex, r2 = front flex on roller, r3 = back flex on load bearing roller, r4 = back flex on Hold Down shoe, r5 = back flex on roller

[2] Complies with FDA 21 CFR | Complies with (EU) 10/2011 and (EC) 1935/2004 regulations regarding the raw materials used and the migration thresholds | Complies with Japanese MHLW Notification 370

● = available | – = not available | empty cells = not tested

[3] More materials and colors on request

S1-18 FLT | 18 % Opening | Flat top

Open version (18 %) for excellent air circulation and drainage | 66 % contact area (Largest opening: 4.6 x 6 mm/0.18 x 0.24 in) | Flat top surface | Smooth surface

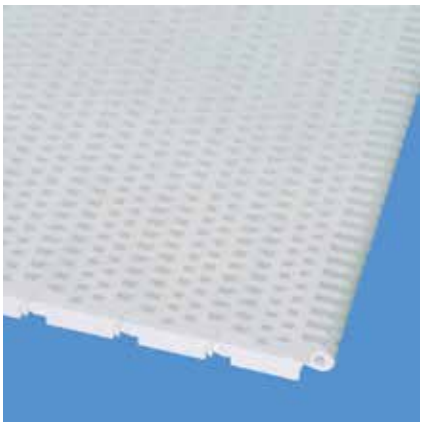

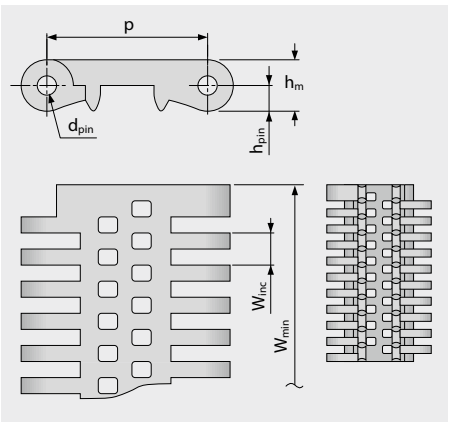

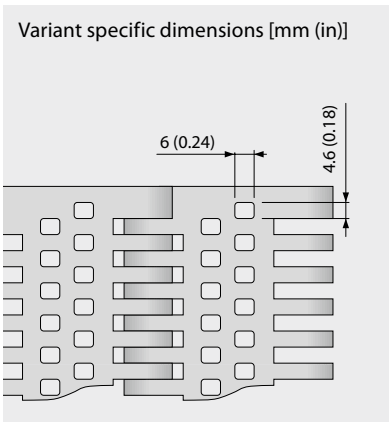

Belt dimensions

	p	d_{pin}	h_m	h_{pin}	h_s	W_{min}	W_{inc}	W_{tol}	Minimum flex radii[1]				
	Pitch	Pin Ø	Thickness	Pin position	Height	Width min.	Width Increment	Width tolerance [%]	r1 C_c x W_B	r2	r3	r4	r5
mm	50.0	6.0	16.0	8.0	0.0	80.0	10.0	±0.2	–	50.0	100.0	150.0	50.0
inch	1.97	0.24	0.63	0.31	0.0	3.15	0.39	±0.2	–	1.97	3.94	5.91	1.97

Available standard materials [3]

Belt		Pin		Nominal belt pull, straight		Weight		Width deviation	Temperature		Certificates[2]		
Material	Color	Material	Color	[N/mm]	[lb/ft]	[kg/m²]	[lb/ft²]	[%]	[°C]	[°F]	FDA	EU	MHLW
PE	UC	PE	UC	18	1233	8.8	1.80	0.15	-70/65	-94/149	●	●	●
Mold to order belts													
POM	WT	PBT	UC	40	2741	12.7	2.60	-0.7	-45/90	-49/194	●	●	●
PP	WT	PP	WT	30	2056	8.2	1.68	0.0	5/100	41/212	●	●	●

☐ UC (Uncolored), ☐ WT (White)

All measurements and tolerances apply at 21 °C; for temperature deviations please see Prolink manual chapter 4.4 "Temperature influence".
All imperial dimensions (inches) are rounded off.

[1] Flex radii: r1 = side flex, r2 = front flex on roller, r3 = back flex on load bearing roller, r4 = back flex on Hold Down shoe, r5 = back flex on roller

[2] Complies with FDA 21 CFR | Complies with (EU) 10/2011 and (EC) 1935/2004 regulations regarding the raw materials used and the migration thresholds | Complies with Japanese MHLW Notification 370
● = available | – = not available | empty cells = not tested

[3] More materials and colors on request

S1-0 NSK | 0 % Opening | Non skid

Closed surface | Non skid surface for increased safety when walking on belt

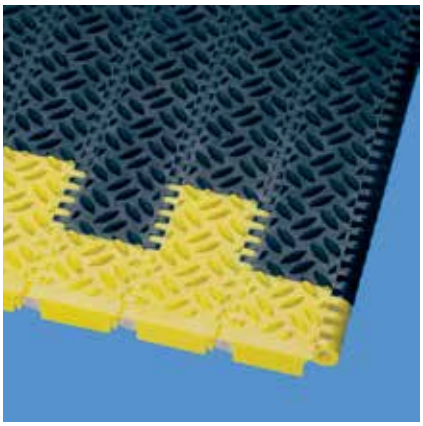

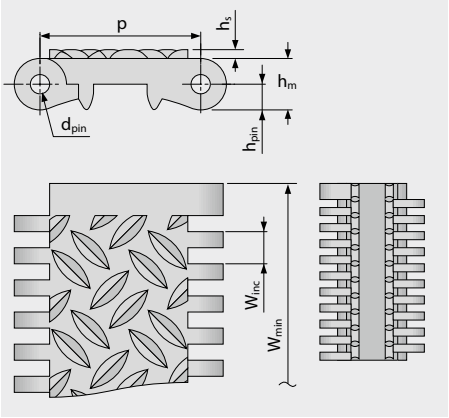

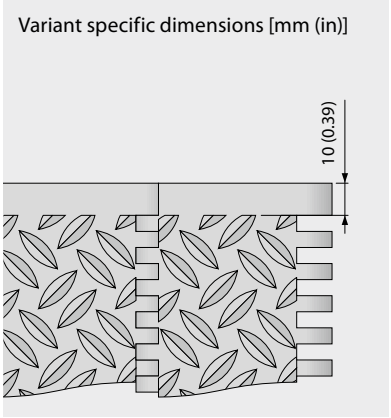

Belt dimensions

	p	d_{pin}	h_m	h_{pin}	h_s	W_{min}	W_{inc}	W_{tol}	Minimum flex radii[1]				
	Pitch	Pin Ø	Thickness	Pin position	Height	Width min.	Width Increment	Width tolerance [%]	r1 C_c x W_B	r2	r3	r4	r5
mm	50.0	6.0	16.0	8.0	2.8	80.0	10.0	±0.2	–	50.0	100.0	150.0	50.0
inch	1.97	0.24	0.63	0.31	0.11	3.15	0.39	±0.2	–	1.97	3.94	5.91	1.97

Available standard materials [3]

Belt		Pin		Nominal belt pull, straight		Weight		Width deviation	Temperature		Certificates[2]		
Material	Color	Material	Color	[N/mm]	[lb/ft]	[kg/m²]	[lb/ft²]	[%]	[°C]	[°F]	FDA	EU	MHLW
POM	AT	PBT	UC	40	2741	16.0	3.28	-0.75	-45/90	-49/194			
POM	YL	PBT	UC	40	2741	16.0	3.28	-0.75	-45/90	-49/194			
POM-HC	AT	PBT	UC	40	2741	16.0	3.28	-0.75	-45/90	-49/194	–	–	

■ AT (Anthracite), □ UC (Uncolored), ■ YL (Yellow)

All measurements and tolerances apply at 21 °C; for temperature deviations please see Prolink manual chapter 4.4 "Temperature influence".
All imperial dimensions (inches) are rounded off.

[1] Flex radii: r1 = side flex, r2 = front flex on roller, r3 = back flex on load bearing roller, r4 = back flex on Hold Down shoe, r5 = back flex on roller

[2] Complies with FDA 21 CFR | Complies with (EU) 10/2011 and (EC) 1935/2004 regulations regarding the raw materials used and the migration thresholds | Complies with Japanese MHLW Notification 370

● = available | – = not available | empty cells = not tested

[3] More materials and colors on request

S1-0 FRT1 | 0 % Opening | Friction top (Design 1)

Closed surface | Friction top with replaceable rubber pads for increased grip



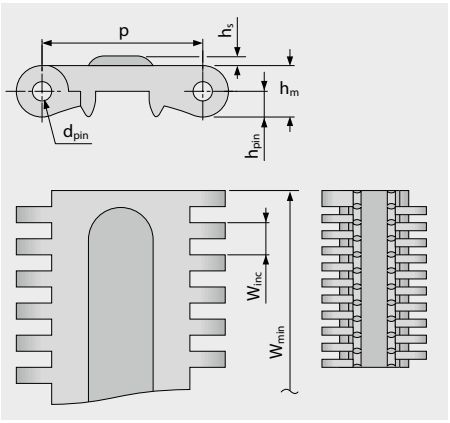

Variant specific dimensions [mm (in)]

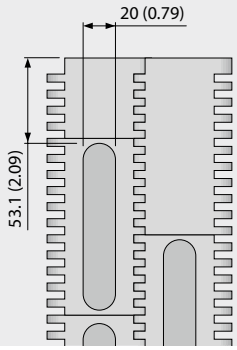

Belt dimensions

	p	d_{pin}	h_m	h_{pin}	h_s	W_{min}	W_{inc}	W_{tol}	Minimum flex radii[1]				
	Pitch	Pin Ø	Thickness	Pin position	Height	Width min.	Width Increment	Width tolerance [%]	r1 C_c x W_B	r2	r3	r4	r5
mm	50.0	6.0	16.0	8.0	3.0	250.0	10.0	±0.2	–	50.0	100.0	150.0	50.0
inch	1.97	0.24	0.63	0.31	0.12	9.84	0.39	±0.2	–	1.97	3.94	5.91	1.97

Available standard materials [3]

Belt		Pin		Rubber		Nominal belt pull, straight		Weight		Width deviation	Temperature		Certificates[2]		
Material	Color	Material	Color	Material	Color	[N/mm]	[lb/ft]	[kg/m²]	[lb/ft²]	[%]	[°C]	[°F]	FDA	EU	MHLW
POM	WT	PBT	UC	R2	BK	40	2741	15.0	3.07	-0.75	-45/90	-49/194	–	–	

■ BK (Black), □ UC (Uncolored), □ WT (White)

All measurements and tolerances apply at 21 °C; for temperature deviations please see Prolink manual chapter 4.4 "Temperature influence".
All imperial dimensions (inches) are rounded off.

[1] Flex radii: r1 = side flex, r2 = front flex on roller, r3 = back flex on load bearing roller, r4 = back flex on Hold Down shoe, r5 = back flex on roller

[2] Complies with FDA 21 CFR | Complies with (EU) 10/2011 and (EC) 1935/2004 regulations regarding the raw materials used and the migration thresholds | Complies with Japanese MHLW Notification 370
● = available | – = not available | empty cells = not tested

[3] More materials and colors on request

S1 SPR | Sprockets

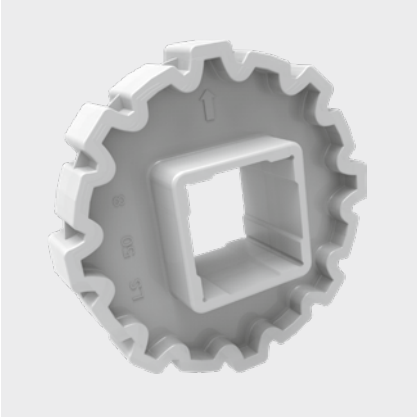

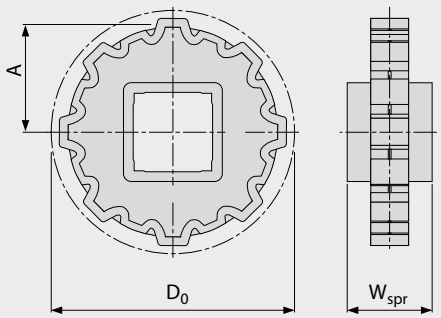

Main dimensions

Sprocket size (Number of teeth)		Z6	Z8	Z10	Z12	Z16
W_{spr}	mm	40.0	40.0	40.0	40.0	40.0
	inch	1.57	1.57	1.57	1.57	1.57
D_0	mm	100.0	130.8	161.8	193.2	256.3
	inch	3.94	5.15	6.37	7.61	10.09
A_{max}	mm	42.0	57.4	72.9	88.6	120.1
	inch	1.65	2.26	2.87	3.49	4.73
A_{min}	mm	36.4	53.0	69.3	85.6	117.8
	inch	1.43	2.09	2.73	3.37	4.64

Shaft bores (● = Round, ■ = Square; ❍ or ❑ = mold to order)

25	mm			❍		
30	mm	❍	●	●		
40	mm	■	■	■	■	■
60	mm		■	■	■	■
80	mm				■	■
1	inch	❍	❍	❍		
1.5	inch	❑	■	■	❑	
2.5	inch				❑	❑

Material: POM, Color: UC

UC (Uncolored)

All measurements and tolerances apply at 21 °C.
All imperial dimensions (inches) are rounded off.
For detailed sprocket and shaft dimensions see appendix 6.3
Number of sprockets (sprocket spacing distance) see chapter 3.2

S1-0 FLT PMC

Flat top surface for dry products | No cling surface to improve release of wet and sticky products



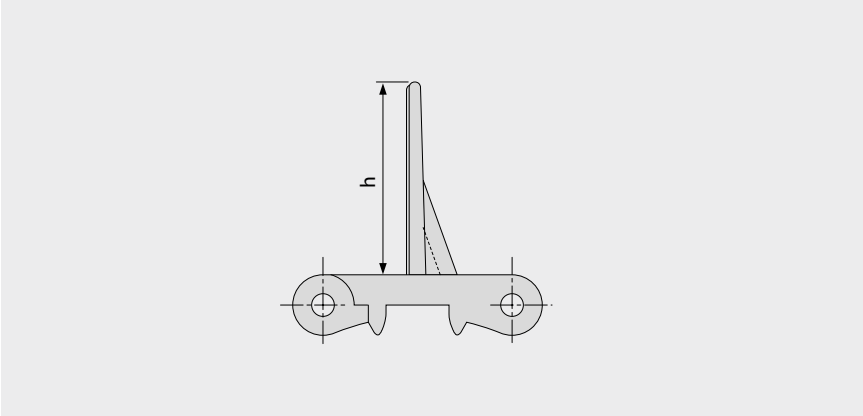

Basic data

Material	Color	Height (h)	
		50 mm 2 inch	100 mm 4 inch
PE	WT	●	●
POM	AT	●	
POM	WT	●	●
PP	WT	●	●

Molded width: 200 mm (7.9 in)

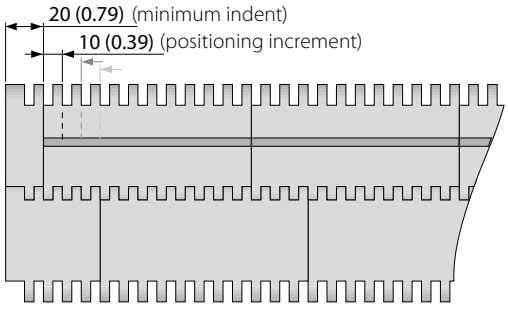

Standard configuration S1-0 FLT PMC

■ AT (Anthracite), □ WT (White)

All measurements and tolerances apply at 21 °C; for temperature deviations please see Prolink manual chapter 4.4 "Temperature influence".
All imperial dimensions (inches) are rounded off.
Note: Use of accessory in a belt may impact on the minimum design radii. Please see chapter 6.3 for further information.

S1-18 FLT PMC

Open verson (18 %) base module for drainage | No cling surface to improve release of wet and sticky products



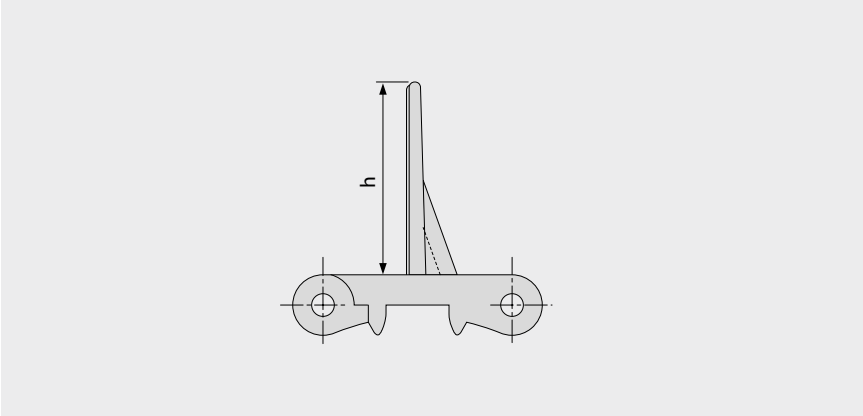

Basic data

Material	Color	Height (h)	
		50 mm 2 inch	100 mm 4 inch
PE	UC	●	●
POM	WT	mold to order	mold to order
PP	WT	mold to order	mold to order

Molded width: 200 mm (7.9 in)

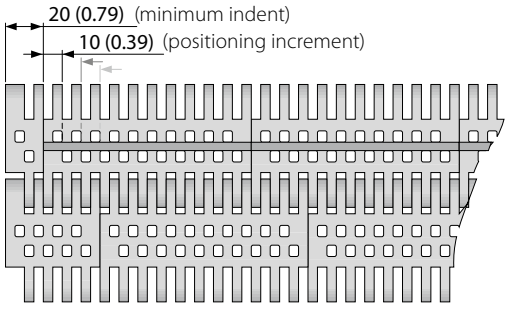

Standard configuration S1-18 FLT PMC

☐ UC (Uncolored), ☐ WT (White)

All measurements and tolerances apply at 21 °C; for temperature deviations please see Prolink manual chapter 4.4 "Temperature influence".
All imperial dimensions (inches) are rounded off.
Note: Use of accessory in a belt may impact on the minimum design radii. Please see chapter 6.3 for further information.

S1 SG | Side guards

For retention of bulk products (only for modules h_s = 0 mm/in)

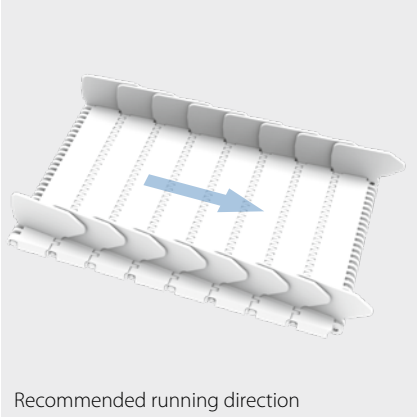
Recommended running direction

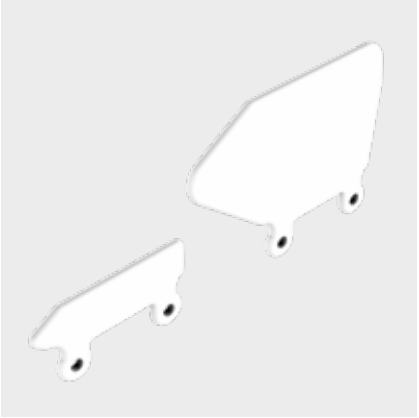

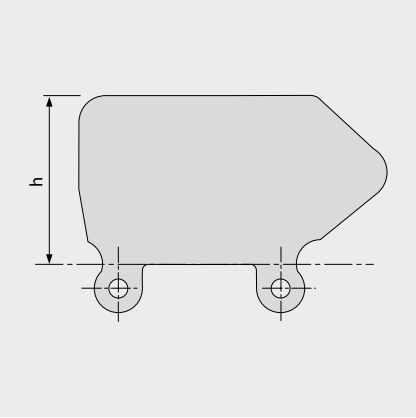

Basic data

Material	Color	Height (h)			
		25 mm 1 inch	50 mm 2 inch	75 mm 3 inch	100 mm 4 inch
PE	LB	●	●	●	●
PE	WT	●	●	●	●
PE-MD	BL		mold to order	●	●
PP	LB	mold to order	●	●	●
PP	WT	●	●	●	●

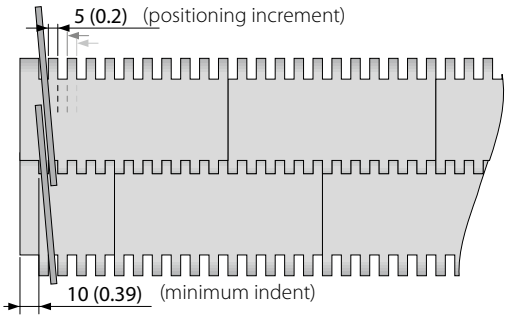

BL (Blue), LB (Light blue), WT (White)

All measurements and tolerances apply at 21 °C; for temperature deviations please see Prolink manual chapter 4.4 "Temperature influence".
All imperial dimensions (inches) are rounded off.
Note: Use of accessory in a belt may impact on the minimum design radii. Please see chapter 6.3 for further information.

siegling prolink
modular belts

SERIES 2

Straight running belts
Pitch 25 mm (0.98 in)

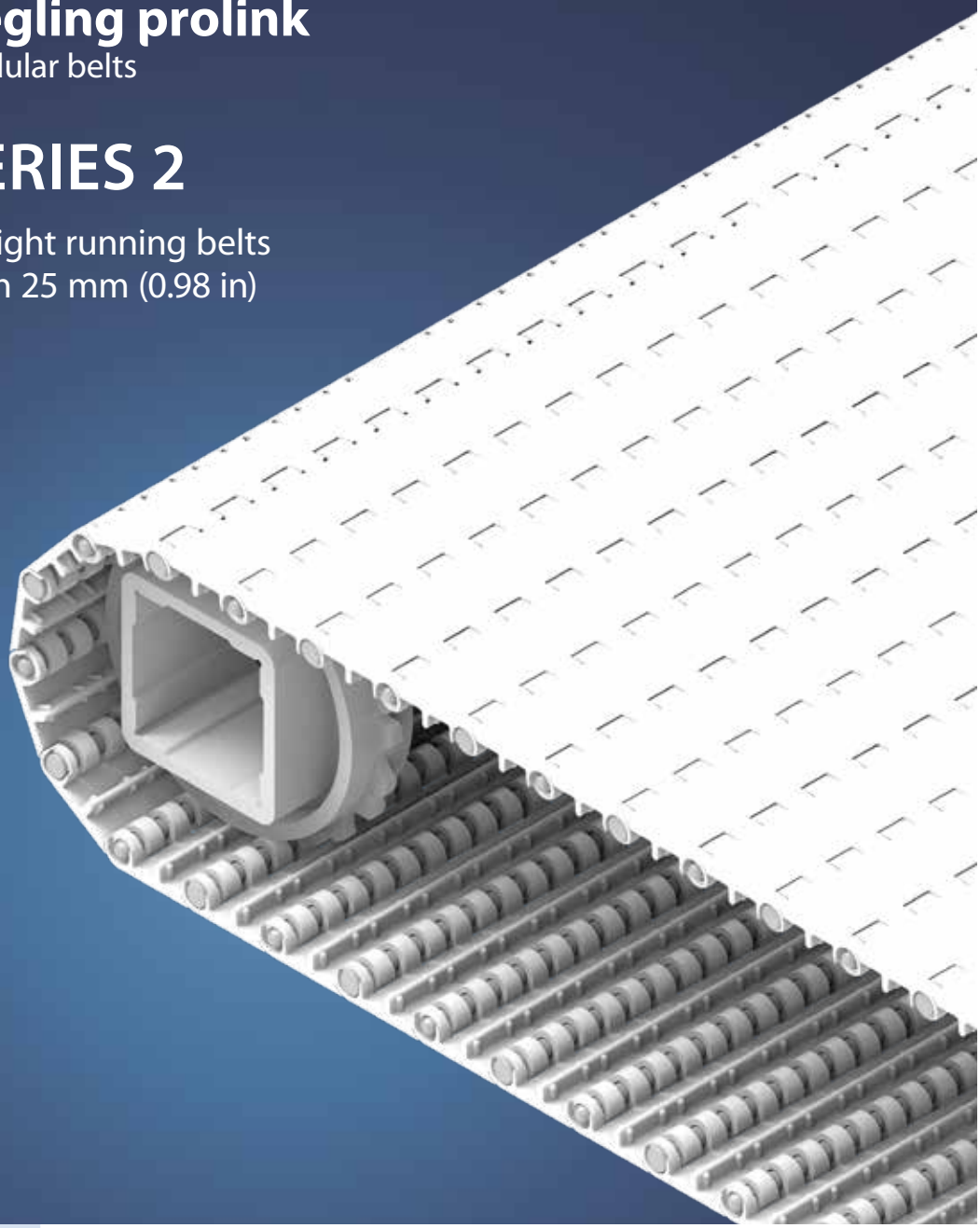

SERIES 2 | **OVERVIEW**

Straight running belts | Pitch 25 mm (0.98 in)

Belts for light-duty food and container handling applications

Side view scale 1:1

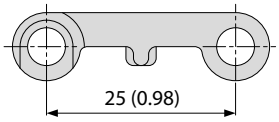

Design characteristics

- Hinges that open wide provides an easy-to-clean belt design
- Low belt weight reduces energy consumption
- Open edge design on flat top versions for unhindered drainage and closed edge design on grid top and raised rib versions

Basic data

Pitch	25 mm (0.98)
Belt width min.	50 mm (1.97 in) 100 mm (3.9 in) for belts with FRT-pattern
Width increments	16.66 mm (0.7 in)
Hinge pins	5 mm (0.2 in) Made of plastic (PBT, PP, PE)

Available surface pattern and opening area

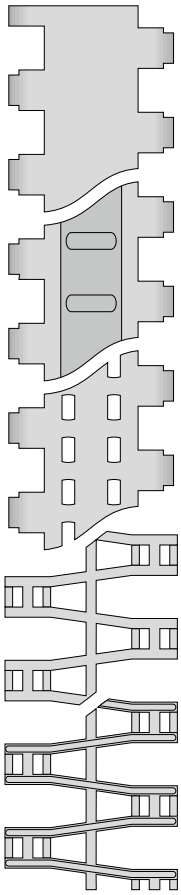

S2-0 FLT
Closed, smooth surface

S2-0 FRT1
Closed surface with friction top

S2-12 FLT
Open (12 %), smooth surface

S2-57 GRT
Open (57 %), grid top surface

S2-57 RRB
Open (57 %), raised rib surface

Sprockets
in different sizes with round or square bore



Profiles
in different heights and designs for inclines

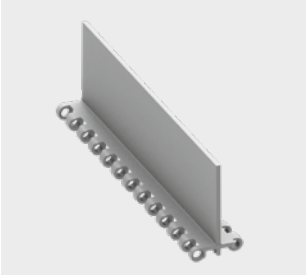

Side guards
in different heights for retention of bulk products



Finger plates
For raised rib types

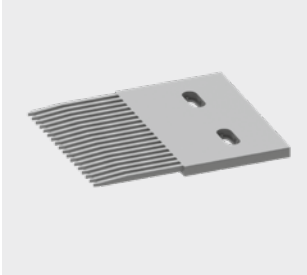

S2-0 FLT | 0 % Opening | Flat top

Closed, smooth surface | Flat top surface



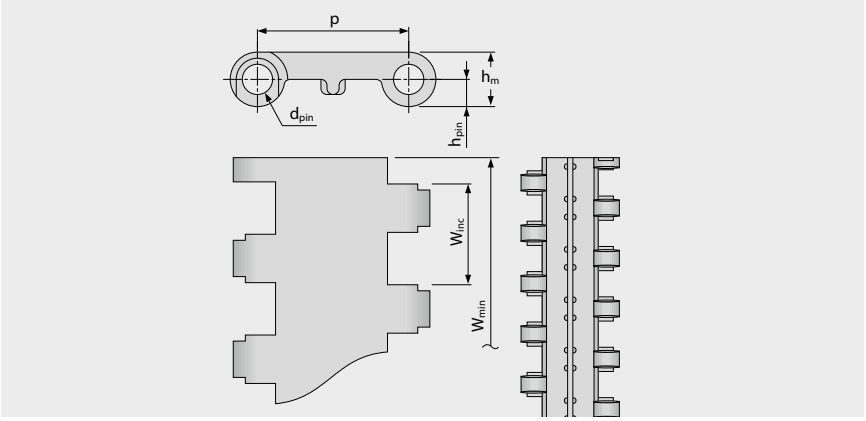

Belt dimensions

	p	d_{pin}	h_m	h_{pin}	h_s	W_{min}	W_{inc}	W_{tol}	Minimum flex radii[1]				
	Pitch	Pin Ø	Thickness	Pin position	Height	Width min.	Width Increment	Width tolerance [%]	r1 C_c x W_B	r2	r3	r4	r5
mm	25.0	5.0	9.0	4.5	0.0	50.0	16.7	±0.2	–	25.0	50.0	75.0	25.0
inch	0.98	0.2	0.35	0.18	0.0	1.97	0.66	±0.2	–	0.98	1.97	2.95	0.98

Available standard materials [3]

Belt		Pin		Nominal belt pull, straight		Weight		Width deviation	Temperature		Certificates[2]		
Material	Color	Material	Color	[N/mm]	[lb/ft]	[kg/m²]	[lb/ft²]	[%]	[°C]	[°F]	FDA	EU	MHLW
PE	WT	PE	UC	3	206	3.9	0.8	-0.2	-70/65	-94/149	●	●	●
POM	WT	PBT	UC	7	480	5.7	1.17	-0.3	-45/90	-49/194	●	●	●
POM	BL	PBT	BL	7	480	5.7	1.17	-0.3	-45/90	-49/194	●	●	●
PP	WT	PP	WT	5	343	3.7	0.76	0.25	5/100	41/212	●	●	●
PP	BL	PP	BL	5	343	3.7	0.76	0.25	5/100	41/212	●	●	●

Mold to width available in: 50 mm (1.97 in), 100 mm (3.94 in), 200 mm (7.87 in)

■ BL (Blue), □ UC (Uncolored), □ WT (White)

All measurements and tolerances apply at 21 °C; for temperature deviations please see Prolink manual chapter 4.4 "Temperature influence".
All imperial dimensions (inches) are rounded off.

[1] Flex radii: r1 = side flex, r2 = front flex on roller, r3 = back flex on load bearing roller, r4 = back flex on Hold Down shoe, r5 = back flex on roller

[2] Complies with FDA 21 CFR | Complies with (EU) 10/2011 and (EC) 1935/2004 regulations regarding the raw materials used and the migration thresholds | Complies with Japanese MHLW Notification 370

● = available | – = not available | empty cells = not tested

[3] More materials and colors on request

S2-0 FRT1 | 0 % Opening | Friction top (Design 1)

Closed surface | Friction top provides increased grip



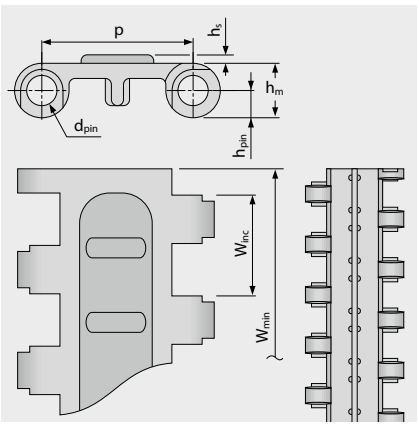

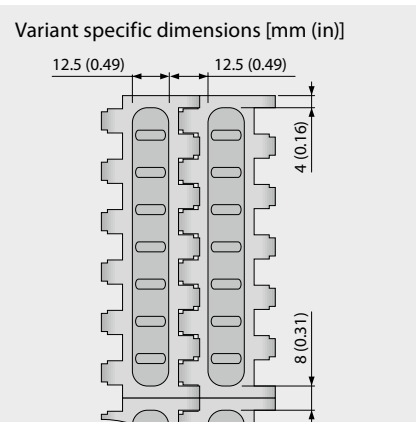

Belt dimensions

	p	d_{pin}	h_m	h_{pin}	h_s	W_{min}	W_{inc}	W_{tol}	Minimum flex radii[1]				
	Pitch	Pin Ø	Thickness	Pin position	Height	Width min.	Width Increment	Width tolerance [%]	r1 C_c x W_B	r2	r3	r4	r5
mm	25.0	5.0	9.0	4.5	1.4	100.0	16.7	±0.2	–	25.0	50.0	75.0	25.0
inch	0.98	0.2	0.35	0.18	0.06	3.94	0.66	±0.2	–	0.98	1.97	2.95	0.98

Available standard materials [3]

Belt		Pin		Rubber		Nominal belt pull, straight		Weight		Width deviation	Temperature		Certificates[2]		
Material	Color	Material	Color	Material	Color	[N/mm]	[lb/ft]	[kg/m²]	[lb/ft²]	[%]	[°C]	[°F]	FDA	EU	MHLW
POM	WT	PBT	UC	R3	TQ	7	480	5.7	1.17	-0.3	-45/65	-49/149			

Mold to width available in: 100 mm (3.94 in)

TQ (Turqouise), UC (Uncolored), WT (White)

All measurements and tolerances apply at 21 °C; for temperature deviations please see Prolink manual chapter 4.4 "Temperature influence".
All imperial dimensions (inches) are rounded off.

[1] Flex radii: r1 = side flex, r2 = front flex on roller, r3 = back flex on load bearing roller, r4 = back flex on Hold Down shoe, r5 = back flex on roller

[2] Complies with FDA 21 CFR | Complies with (EU) 10/2011 and (EC) 1935/2004 regulations regarding the raw materials used and the migration thresholds | Complies with Japanese MHLW Notification 370

● = available | – = not available | empty cells = not tested

[3] More materials and colors on request

S2-12 FLT | 12 % Opening | Flat top

Open version (12 %) for excellent air circulation and drainage | 83 % contact area (Largest opening: 5 x 3 mm/0.2 x 0.12 in) | Flat top surface | Smooth surface



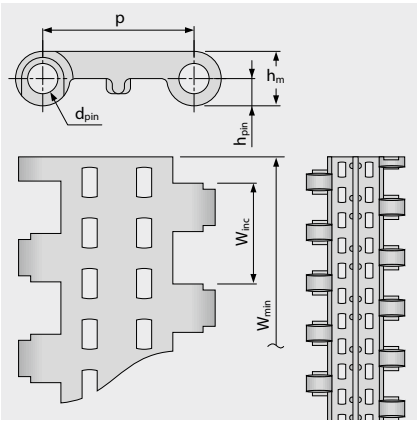

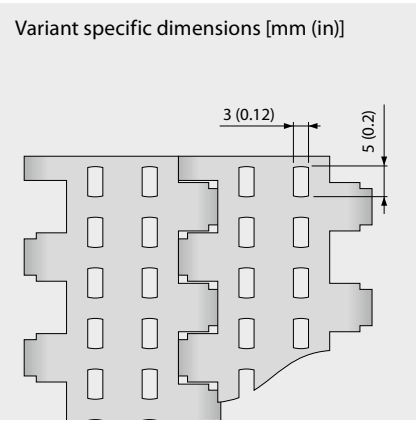

Belt dimensions

	p	d_{pin}	h_m	h_{pin}	h_s	W_{min}	W_{inc}	W_{tol}	Minimum flex radii[1]			
	Pitch	Pin Ø	Thickness	Pin position	Height	Width min.	Width Increment	Width tolerance [%]	r1 C_c x W_B	r2	r3	r4	r5
mm	25.0	5.0	9.0	4.5	0.0	50.0	16.7	±0.2	–	25.0	50.0	75.0	25.0
inch	0.98	0.2	0.35	0.18	0.0	1.97	0.66	±0.2	–	0.98	1.97	2.95	0.98

Available standard materials [3]

Belt		Pin		Nominal belt pull, straight		Weight		Width deviation	Temperature		Certificates[2]		
Material	Color	Material	Color	[N/mm]	[lb/ft]	[kg/m²]	[lb/ft²]	[%]	[°C]	[°F]	FDA	EU	MHLW
PP	WT	PP	WT	5	343	3.5	0.72	0.2	5/100	41/212	●	●	●
Mold to order belts													
PE	WT	PE	UC	3	206	3.7	0.76	0.0	-70/65	-94/149	●	●	●
POM	WT	PBT	UC	7	480	5.4	1.11	-0.1	-45/90	-49/194	●	●	●

Mold to width available in: 50 mm (1.97 in), 100 mm (3.94 in), 200 mm (7.87 in)

UC (Uncolored), WT (White)

All measurements and tolerances apply at 21 °C; for temperature deviations please see Prolink manual chapter 4.4 "Temperature influence".
All imperial dimensions (inches) are rounded off.

[1] Flex radii: r1 = side flex, r2 = front flex on roller, r3 = back flex on load bearing roller, r4 = back flex on Hold Down shoe, r5 = back flex on roller

[2] Complies with FDA 21 CFR | Complies with (EU) 10/2011 and (EC) 1935/2004 regulations regarding the raw materials used and the migration thresholds | Complies with Japanese MHLW Notification 370
● = available | – = not available | empty cells = not tested

[3] More materials and colors on request

Straight running belt | Pitch 25 mm (0.98 in)

S2-57 GRT | 57 % Opening | Grid top

Large open area (57 %) allows minimal product contact | 37 % contact area (Largest opening: Ø = 7 mm/0.28 in) | For excellent air circulation and drainage | Grid top surface

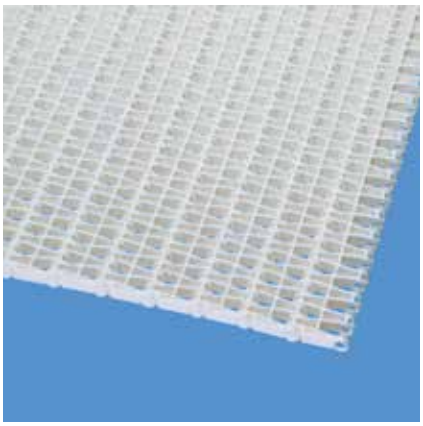

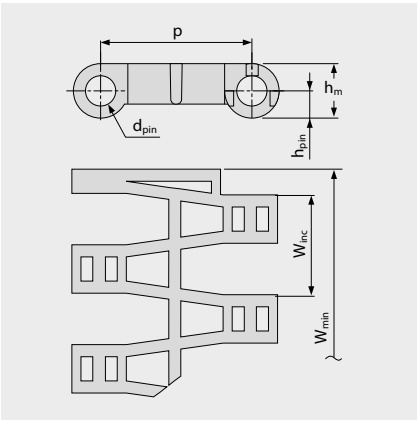

Variant specific dimensions [mm (in)]

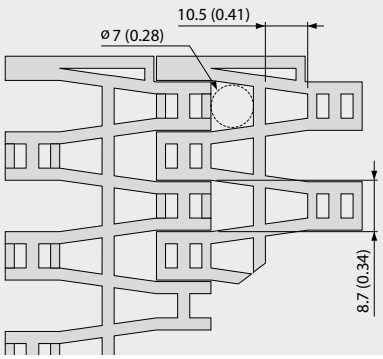

Belt dimensions

	p	d_{pin}	h_m	h_{pin}	h_s	W_{min}	W_{inc}	W_{tol}	Minimum flex radii[1]			
	Pitch	Pin Ø	Thickness	Pin position	Height	Width min.	Width Increment	Width tolerance [%]	r1 C_c x W_B	r2	r3	r4	r5
mm	25.0	5.0	9.0	4.5	0.0	50.0	16.7	±0.2	–	25.0	50.0	75.0	25.0
inch	0.98	0.2	0.35	0.18	0.0	1.97	0.66	±0.2	–	0.98	1.97	2.95	0.98

Available standard materials[3]

Belt		Pin		Nominal belt pull, straight		Weight		Width deviation	Temperature		Certificates[2]		
Material	Color	Material	Color	[N/mm]	[lb/ft]	[kg/m²]	[lb/ft²]	[%]	[°C]	[°F]	FDA	EU	MHLW
PE	UC	PE	UC	3	206	3.4	0.7	-0.2	-70/65	-94/149	●	●	●
PE	DB	PE	DB	3	206	3.4	0.7	-0.2	-70/65	-94/149	●	●	●
POM	UC	PBT	UC	7	480	4.8	0.98	-0.2	-45/90	-49/194	●	●	●
POM	BL	PBT	BL	7	480	4.8	0.98	-0.2	-45/90	-49/194	●	●	●
PP	WT	PP	WT	5	343	3.3	0.68	0.2	5/100	41/212	●	●	●
PP	BL	PP	BL	5	343	3.3	0.68	0.2	5/100	41/212	●	●	●
Mold to order belts													
PA-HT	BK	PA-HT	BK	5	343	4.0	0.82	1.3	-30/155	-22/311	–	–	

■ BK (Black), ■ BL (Blue), ■ DB (Dark blue), □ UC (Uncolored), □ WT (White)

All measurements and tolerances apply at 21 °C; for temperature deviations please see Prolink manual chapter 4.4 "Temperature influence".
All imperial dimensions (inches) are rounded off.

[1] Flex radii: r1 = side flex, r2 = front flex on roller, r3 = back flex on load bearing roller, r4 = back flex on Hold Down shoe, r5 = back flex on roller

[2] Complies with FDA 21 CFR | Complies with (EU) 10/2011 and (EC) 1935/2004 regulations regarding the raw materials used and the migration thresholds | Complies with Japanese MHLW Notification 370

● = available | – = not available | empty cells = not tested

[3] More materials and colors on request

S2-57 RRB | 57 % Opening | Raised rib

Large open area (57 %) for excellent air circulation and drainage | Raised ribs for minimal product contact (28 % contact area (Largest opening: Ø = 7 mm/0.28 in) and smooth product transfer using finger transfer plates

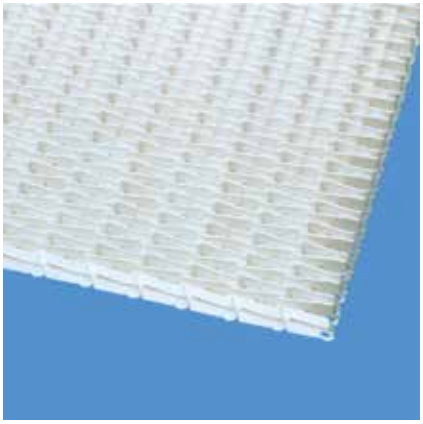

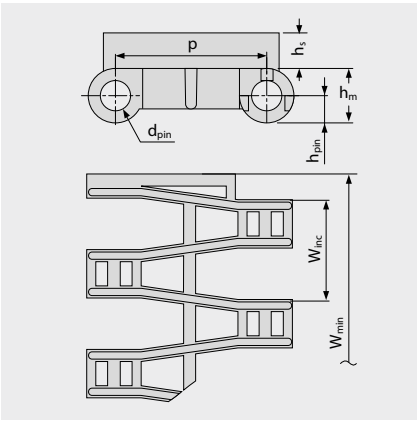

Variant specific dimensions [mm (in)]

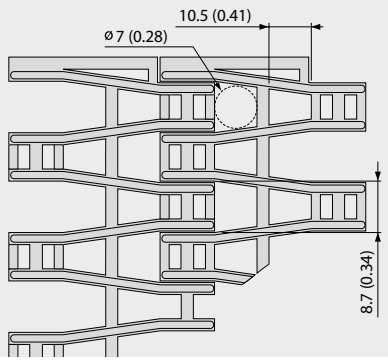

Belt dimensions

	p	d_{pin}	h_m	h_{pin}	h_s	W_{min}	W_{inc}	W_{tol}	Minimum flex radii[1]				
	Pitch	Pin Ø	Thickness	Pin position	Height	Width min.	Width Increment	Width tolerance [%]	r1 C_c x W_B	r2	r3	r4	r5
mm	25.0	5.0	9.0	4.5	5.5	50.0	16.7	±0.2	–	25.0	50.0	75.0	50.0
inch	0.98	0.2	0.35	0.18	0.22	1.97	0.66	±0.2	–	0.98	1.97	2.95	1.97

Available standard materials[3]

Belt		Pin		Nominal belt pull, straight		Weight		Width deviation	Temperature		Certificates[2]		
Material	Color	Material	Color	[N/mm]	[lb/ft]	[kg/m²]	[lb/ft²]	[%]	[°C]	[°F]	FDA	EU	MHLW
POM	BL	PBT	BL	7	480	6.2	1.27	-0.2	-45/90	-49/194	●	●	●
Mold to order belts													
PE		PE		3	206	4.3	0.88	-0.2	-70/65	-94/149			
PP	WT	PP	WT	5	343	4.2	0.86	0.2	5/100	41/212	●	●	●

BL (Blue), WT (White)

All measurements and tolerances apply at 21 °C; for temperature deviations please see Prolink manual chapter 4.4 "Temperature influence".
All imperial dimensions (inches) are rounded off.

[1] Flex radii: r1 = side flex, r2 = front flex on roller, r3 = back flex on load bearing roller, r4 = back flex on Hold Down shoe, r5 = back flex on roller

[2] Complies with FDA 21 CFR | Complies with (EU) 10/2011 and (EC) 1935/2004 regulations regarding the raw materials used and the migration thresholds | Complies with Japanese MHLW Notification 370
● = available | – = not available | empty cells = not tested

[3] More materials and colors on request

S2 SPR | Sprockets

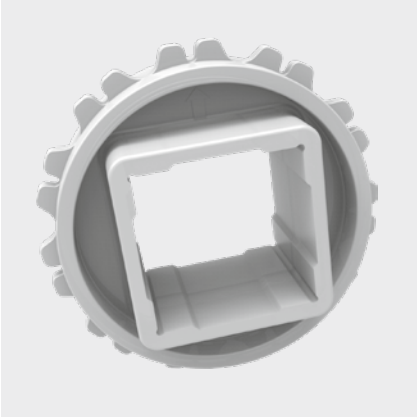

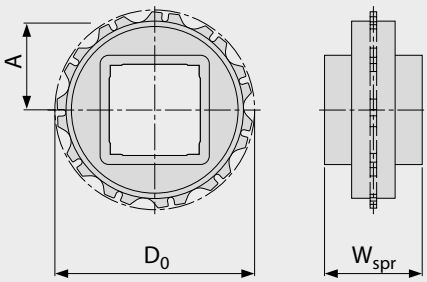

Main dimensions

Sprocket size (Number of teeth)		Z6	Z11	Z19	Z20
W_{spr}	mm	25.0	40.0	40.0	40.0
	inch	0.98	1.57	1.57	1.57
D_0	mm	50.4	89.5	153.1	161.1
	inch	1.98	3.52	6.03	6.34
A_{max}	mm	20.7	40.2	72.1	76.0
	inch	0.81	1.58	2.84	2.99
A_{min}	mm	17.9	38.6	71.1	75.1
	inch	0.71	1.52	2.80	2.96

Shaft bores (● = Round, ■ = Square; ❍ or ❑ = mold to order)

25	mm	● / ■	●		
30	mm		●		
40	mm		■	■	■
60	mm			■	
80	mm			■	
0.75	inch	❍			
1	inch	❍ / ❑	● / ■		
1.5	inch		■	■	
2.5	inch			❑	

Material: POM, Color: UC

UC (Uncolored)

All measurements and tolerances apply at 21 °C.
All imperial dimensions (inches) are rounded off.
For detailed sprocket and shaft dimensions see appendix 6.3
Number of sprockets (sprocket spacing distance) see chapter 3.2

S2-0 FLT PMU

Flat top surface for dry products



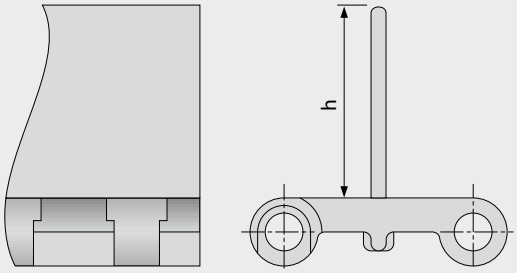

Basic data

Material	Color	Height (h)	
		25 mm 1 inch	50 mm 2 inch
PE	WT	●	●
POM	BL	●	●
POM	WT	●	●
PP	BL	●	●
PP	GN	●	
PP	WT	●	●

Molded width: 200 mm (7.9 in)

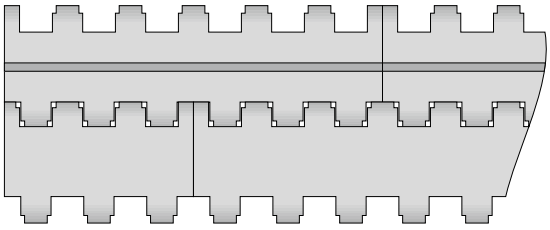

Standard configuration S2-0 FLT PMU

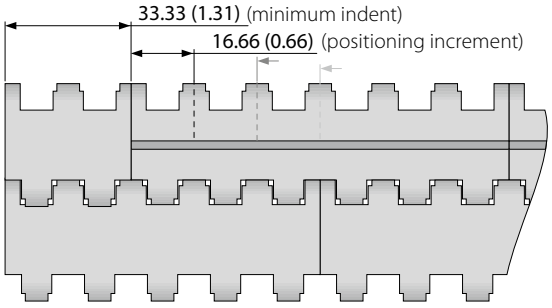

Indent configuration S2-0 FLT PMU

BL (Blue), GN (Green), WT (White)

All measurements and tolerances apply at 21 °C; for temperature deviations please see Prolink manual chapter 4.4 "Temperature influence".
All imperial dimensions (inches) are rounded off.
Note: Use of accessory in a belt may impact on the minimum design radii. Please see chapter 6.3 for further information.

S2-57 GRT PMC

Open version (57 %) base module for good drainage



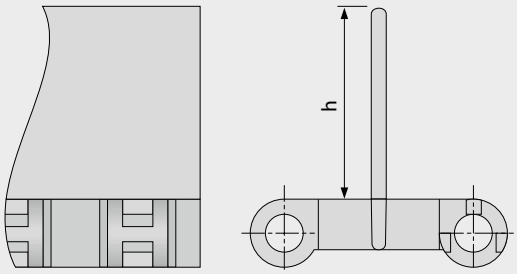

Basic data

Material	Color	Height (h)	
		25 mm 1 inch	50 mm 2 inch
PE	UC	●	●
POM	BL	●	●
POM	UC	●	mold to order
PP	BL	●	●
PP	WT	●	●

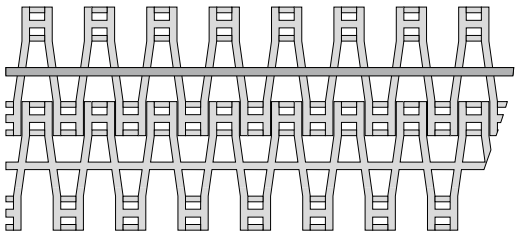

Standard configuration S2-57 GRT PMC

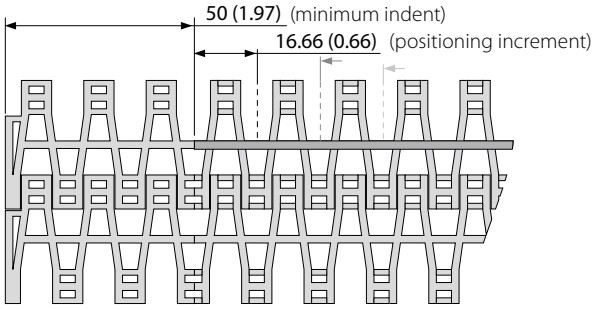

Indent configuration S2-57 GRT PMC

BL (Blue), UC (Uncolored), WT (White)

All measurements and tolerances apply at 21 °C; for temperature deviations please see Prolink manual chapter 4.4 "Temperature influence".
All imperial dimensions (inches) are rounded off.
Note: Use of accessory in a belt may impact on the minimum design radii. Please see chapter 6.3 for further information.

S2 SG | Side guards

For retention of bulk products (only for modules h_s = 0 mm/in)


Recommended running direction



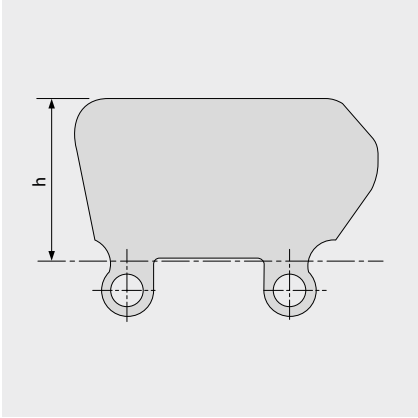

Basic data

Material	Color	Height (h)	
		25 mm 1 inch	50 mm 2 inch
PE	BL	●	mold to order
PE	WT	mold to order	●
PP	BL	●	●
PP	WT	●	●

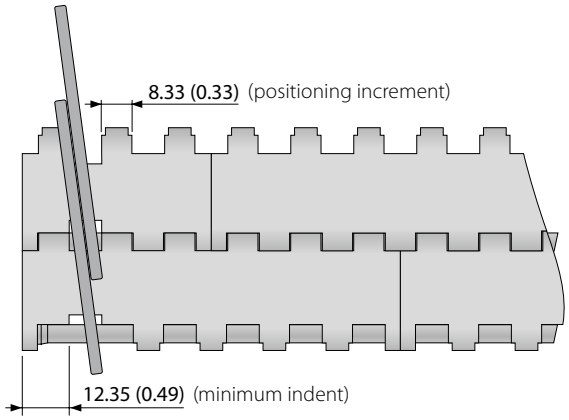

BL (Blue), WT (White)

All measurements and tolerances apply at 21 °C; for temperature deviations please see Prolink manual chapter 4.4 "Temperature influence".
All imperial dimensions (inches) are rounded off.
Note: Use of accessory in a belt may impact on the minimum design radii. Please see chapter 6.3 for further information.

siegling prolink
modular belts

SERIES 4.1

Straight running belts
Pitch 14 mm (0.55 in)

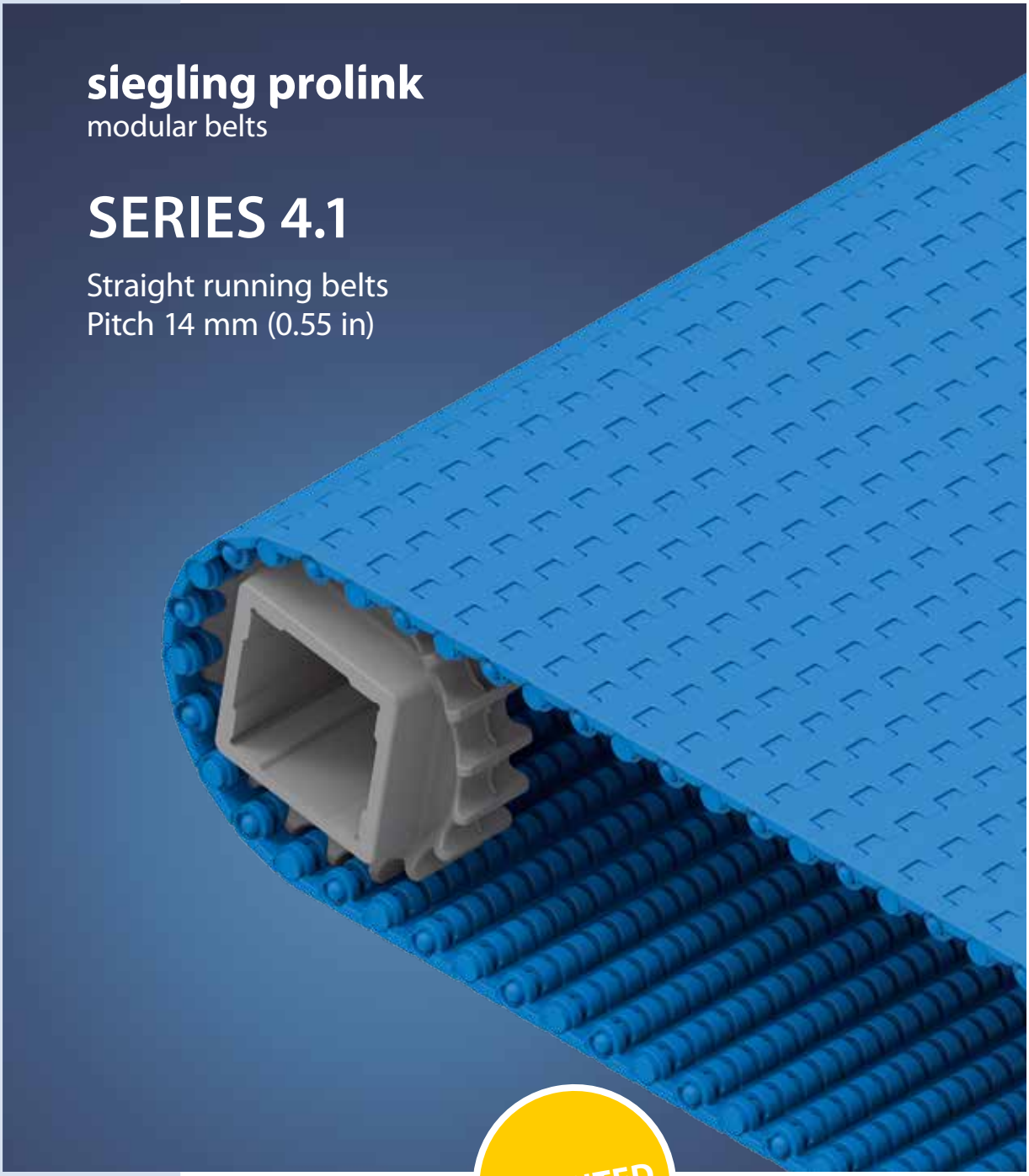

PATENTED

SERIES 4.1 | **OVERVIEW**

Straight running belts | Pitch 14 mm (0.55 in)

Belts for light to medium-duty food and non-food applications

Side view scale 1:1

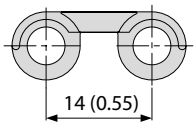

Design characteristics

- Small pitch belt for applications requiring small transfer gaps
- Hinges that open wide and flat channels on the underside ensure the belt is easy to clean
- Unique sprocket design with rounded tooth edges provides ideal load distribution
- Wide sprocket teeth ensure superior sprocket engagement and strength

Basic data

Pitch	14 mm (0.55 in)
Belt width min.	25 mm (0.98)
Width increments	12.5 mm (0.5 in)
Hinge pins	5 mm (0.2 in) made of plastic (PBT, PP, PE, POM-MD). One-piece up to a belt width of 1200 mm (47 in).

Available surface pattern and opening area

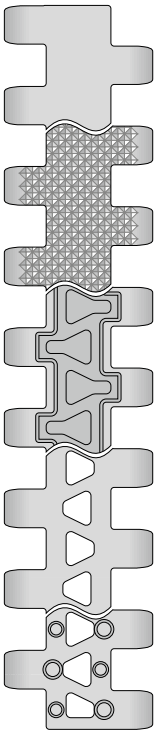

S4.1-0 FLT
Closed, smooth surface

S4.1-0 NPY
Closed surface with negative pyramid pattern

S4.1-0 FRT1
Closed surface with friction top

S4.1-21 FLT
Open (21 %), smooth surface

S4.1-21 NTP
Open (21 %) surface with round studs. Version available without round studs at the side (25 mm indent)

NSF Certified

NSF-compliant from these certified Forbo plants: Huntersville (USA), Malacky (Slovakia), Tlalnepantla (Mexico)

Sprockets
in different sizes with round or square bore



Profiles
in different heights and designs for inclines

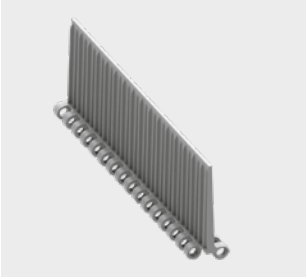

ProSnap
Quick-Release for easy opening and closing of the belt

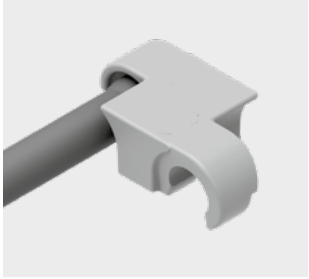

S4.1-0 FLT | 0 % Opening | Flat top

Closed, smooth surface | Flat top surface

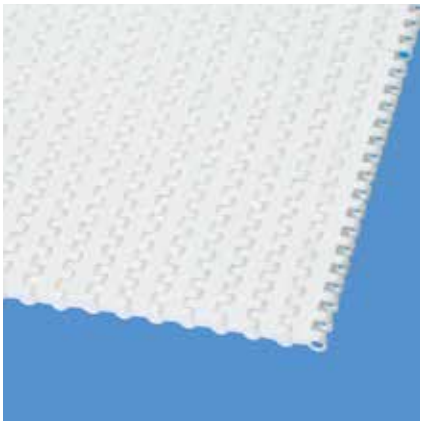

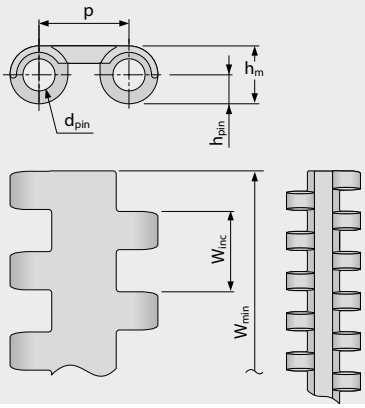

Belt dimensions

	p	d_{pin}	h_m	h_{pin}	h_s	W_{min}	W_{inc}	W_{tol}	Minimum flex radii[1]				
	Pitch	Pin Ø	Thickness	Pin position	Height	Width min.	Width Increment	Width tolerance [%]	r1 C_c x W_B	r2	r3	r4	r5
mm	14.0	5.0	9.0	4.5	0.0	25.0	12.5	±0.2	–	11.0	25.0	38.0	12.5
inch	0.55	0.2	0.35	0.18	0.0	0.98	0.49	±0.2	–	0.43	0.98	1.5	0.49

Available standard materials[3]

Belt		Pin		Nominal belt pull, straight		Weight		Width deviation	Temperature		Certificates[2]		
Material	Color	Material	Color	[N/mm]	[lb/ft]	[kg/m²]	[lb/ft²]	[%]	[°C]	[°F]	FDA	EU	MHLW
PE	WT	PE	UC	3	206	5.1	1.04	-0.1	-70/65	-94/149	●	●	●
PE	BL	PE	UC	3	206	5.1	1.04	-0.1	-70/65	-94/149	●	●	●
POM	BL	PBT	BL	10	685	7.1	1.45	0.0	-45/90	-49/194	●	●	●
POM	WT	PBT	UC	10	685	7.1	1.45	0.0	-45/90	-49/194	●	●	●
POM	LG	PBT	UC	10	685	7.1	1.45	0.0	-45/90	-49/194	●	●	●
POM-MD	BL	POM-MD	BL	10	685	7.5	1.54	0.0	-45/90	-49/194	●	●	●
PP	BL	PP	BL	5	343	4.6	0.94	0.25	5/100	41/212	●	●	●
PP	WT	PP	WT	5	343	4.6	0.94	0.25	5/100	41/212	●	●	●
Mold to order belts													
PE	UC	PBT	UC	3	206	5.1	1.04	-0.1	-70/65	-94/149	●	●	●
PXX-HC	BK	PBT	UC	5	343	5.1	1.04	0.25	5/100	41/212			

Mold to width available in: 38 mm (1.5 in), 50 mm (1.97 in), 100 mm (3.94 in), 125 mm (4.92 in), 200 mm (7.87 in)

BL (Blue), BK (Black), LG (Light gray), UC (Uncolored), WT (White)

All measurements and tolerances apply at 21 °C; for temperature deviations please see Prolink manual chapter 4.4 "Temperature influence".
All imperial dimensions (inches) are rounded off.

[1] Flex radii: r1 = side flex, r2 = front flex on roller, r3 = back flex on load bearing roller, r4 = back flex on Hold Down shoe, r5 = back flex on roller

[2] Complies with FDA 21 CFR | Complies with (EU) 10/2011 and (EC) 1935/2004 regulations regarding the raw materials used and the migration thresholds | Complies with Japanese MHLW Notification 370
● = available | – = not available | empty cells = not tested

[3] More materials and colors on request

S4.1-0 NPY | 0 % Opening | Negative pyramid

Closed surface | Negative pyramid pattern for superb release characteristics when conveying wet or sticky products

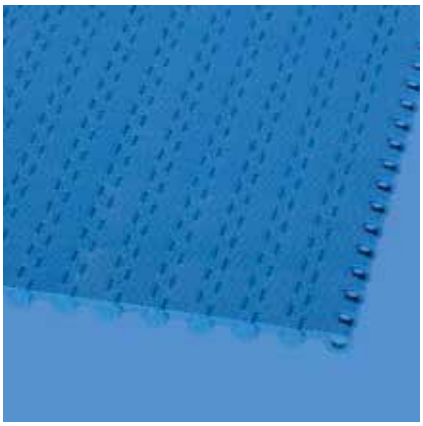

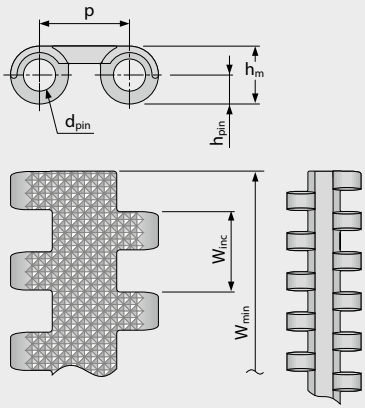

Belt dimensions

	p	d_{pin}	h_m	h_{pin}	h_s	W_{min}	W_{inc}	W_{tol}	Minimum flex radii[1]				
	Pitch	Pin Ø	Thickness	Pin position	Height	Width min.	Width Increment	Width tolerance [%]	r1 C_c x W_B	r2	r3	r4	r5
mm	14.0	5.0	9.0	4.5	0.0	25.0	12.5	±0.2	–	11.0	25.0	38.0	12.5
inch	0.55	0.2	0.35	0.18	0.0	0.98	0.49	±0.2	–	0.43	0.98	1.5	0.49

Available standard materials [3]

Belt		Pin		Nominal belt pull, straight		Weight		Width deviation	Temperature		Certificates[2]		
Material	Color	Material	Color	[N/mm]	[lb/ft]	[kg/m²]	[lb/ft²]	[%]	[°C]	[°F]	FDA	EU	MHLW
POM	BL	PBT	BL	10	685	7.1	1.45	0.0	-45/90	-49/194	●	●	●
PP	BL	PP	BL	5	343	4.6	0.94	0.25	5/100	41/212	●	●	●
Mold to order belts													
PE	BL	PE	UC	3	206	5.1	1.04	-0.1	-70/65	-94/149	●	●	●

Mold to width available in: 200 mm (7.87 in)

BL (Blue), UC (Uncolored)

All measurements and tolerances apply at 21 °C; for temperature deviations please see Prolink manual chapter 4.4 "Temperature influence".
All imperial dimensions (inches) are rounded off.

[1] Flex radii: r1 = side flex, r2 = front flex on roller, r3 = back flex on load bearing roller, r4 = back flex on Hold Down shoe, r5 = back flex on roller

[2] Complies with FDA 21 CFR | Complies with (EU) 10/2011 and (EC) 1935/2004 regulations regarding the raw materials used and the migration thresholds | Complies with Japanese MHLW Notification 370

● = available | – = not available | empty cells = not tested

[3] More materials and colors on request

S4.1-0 FRT1 | 0 % Opening | Friction top (Design 1)

Closed surface | Friction top with slightly elevated triangular shapes to reduce contact area/increase contact pressure to optimise grip and to channel dirt away from the friction surface

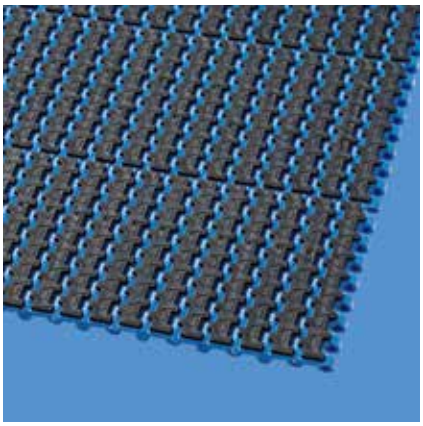

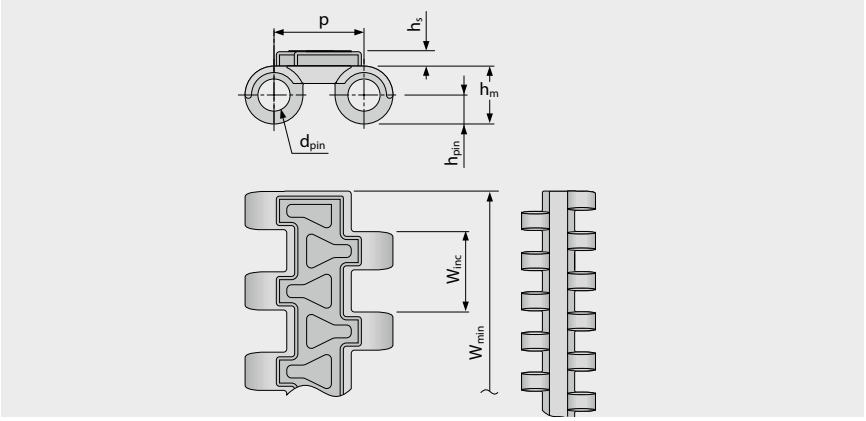

Belt dimensions

	p	d_{pin}	h_m	h_{pin}	h_s	W_{min}	W_{inc}	W_{tol}	Minimum flex radii[1]				
	Pitch	Pin Ø	Thickness	Pin position	Height	Width min.	Width Increment	Width tolerance [%]	r1 C_c x W_B	r2	r3	r4	r5
mm	14.0	5.0	9.0	4.5	2.4	50.0	12.5	±0.2	–	11.0	25.0	38.0	16.5
inch	0.55	0.2	0.35	0.18	0.09	1.97	0.49	±0.2	–	0.43	0.98	1.5	0.65

Available standard materials [3]

Belt		Pin		Rubber		Nominal belt pull, straight		Weight		Width deviation	Temperature		Certificates[2]		
Material	Color	Material	Color	Material	Color	[N/mm]	[lb/ft]	[kg/m²]	[lb/ft²]	[%]	[°C]	[°F]	FDA	EU	MHLW
PE	WT	PE	UC	R8	BG	3	206	6.8	1.39	-0.1	-70/65	-94/149	●	●	●
POM	BL	PBT	BL	R6	BK	10	685	9.4	1.93	0.0	-45/60	-49/140	–	–	
PP	BL	PP	BL	R7	BK	5	343	6.9	1.41	0.25	5/100	41/212	●	●	●
PP	WT	PP	WT	R7	BG	5	343	6.9	1.41	0.25	5/100	41/212	●	●	●
Mold to order belts															
PXX-HC	BK	PBT	UC	R7	BK	5	343	7.3	1.5	0.25	5/100	41/212	–	–	

Mold to width available in: 50 mm (1.97 in), 125 mm (4.92 in), 200 mm (7.87 in)

BG (Beige), BL (Blue), BK (Black), UC (Uncolored), WT (White)

All measurements and tolerances apply at 21 °C; for temperature deviations please see Prolink manual chapter 4.4 "Temperature influence".
All imperial dimensions (inches) are rounded off.

[1] Flex radii: r1 = side flex, r2 = front flex on roller, r3 = back flex on load bearing roller, r4 = back flex on Hold Down shoe, r5 = back flex on roller

[2] Complies with FDA 21 CFR | Complies with (EU) 10/2011 and (EC) 1935/2004 regulations regarding the raw materials used and the migration thresholds | Complies with Japanese MHLW Notification 370
● = available | – = not available | empty cells = not tested

[3] More materials and colors on request

S4.1-21 FLT | 21 % Opening | Flat top

Large open area (21 %) for excellent air circulation and drainage | 70 % contact area (Largest opening: Ø = 3.8 mm/0.15 in) | Smooth surface

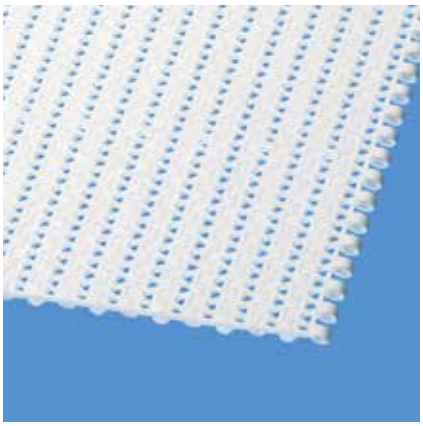

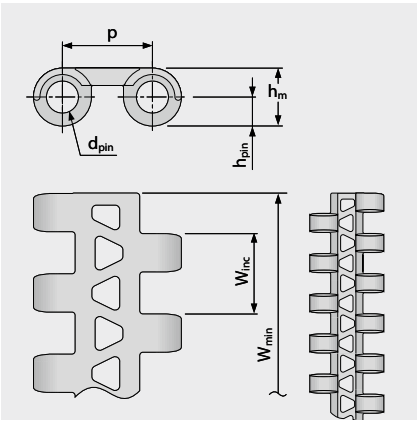

Variant specific dimensions [mm (in)]

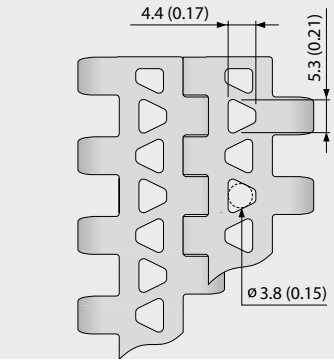

Belt dimensions

	p	d_{pin}	h_m	h_{pin}	h_s	W_{min}	W_{inc}	W_{tol}	Minimum flex radii[1]				
	Pitch	Pin Ø	Thickness	Pin position	Height	Width min.	Width Increment	Width tolerance [%]	r1 C_c x W_B	r2	r3	r4	r5
mm	14.0	5.0	9.0	4.5	0.0	25.0	12.5	±0.2	–	11.0	25.0	38.0	12.5
inch	0.55	0.2	0.35	0.18	0.0	0.98	0.49	±0.2	–	0.43	0.98	1.5	0.49

Available standard materials [3]

Belt		Pin		Nominal belt pull, straight		Weight		Width deviation	Temperature		Certificates[2]		
Material	Color	Material	Color	[N/mm]	[lb/ft]	[kg/m²]	[lb/ft²]	[%]	[°C]	[°F]	FDA	EU	MHLW
PE	WT	PE	UC	3	206	4.5	0.92	-0.1	-70/65	-94/149	●	●	●
PE	UC	PBT	UC	3	206	4.5	0.92	-0.1	-70/65	-94/149	●	●	●
PE	BL	PE	UC	3	206	4.5	0.92	-0.1	-70/65	-94/149	●	●	●
POM	BL	PBT	BL	10	685	6.5	1.33	0.0	-45/90	-49/194	●	●	●
POM	WT	PBT	UC	10	685	6.5	1.33	0.0	-45/90	-49/194	●	●	●
PP	BL	PP	BL	5	343	4.1	0.84	0.25	5/100	41/212	●	●	●
PP	WT	PP	WT	5	343	4.1	0.84	0.25	5/100	41/212	●	●	●
Mold to order belts													
PA-HT	BK	PA-HT	BK	10	685	6.4	1.31	1.4	-30/155	-22/311	–	–	
POM-MD	BL	POM-MD	BL	10	685	6.9	1.41	0.0	-45/90	-49/194	●	●	●
PP-MD	BL	POM-MD	BL	5	343	5.2	0.92	0.2	5/100	41/212	●	●	●

Mold to width available in: 38 mm (1.5 in), 50 mm (1.97 in), 100 mm (3.94 in), 200 mm (7.87 in)

■ BK (Black), ■ BL (Blue), □ UC (Uncolored), □ WT (White)

All measurements and tolerances apply at 21 °C; for temperature deviations please see Prolink manual chapter 4.4 "Temperature influence".
All imperial dimensions (inches) are rounded off.

[1] Flex radii: r1 = side flex, r2 = front flex on roller, r3 = back flex on load bearing roller, r4 = back flex on Hold Down shoe, r5 = back flex on roller

[2] Complies with FDA 21 CFR | Complies with (EU) 10/2011 and (EC) 1935/2004 regulations regarding the raw materials used and the migration thresholds | Complies with Japanese MHLW Notification 370
● = available | – = not available | empty cells = not tested

[3] More materials and colors on request

S4.1-21 NTP | 21 % Opening | Nub top (round studs)

Large open area (21 %) for excellent air circulation and drainage | 4 % contact area (Largest opening: Ø = 3.8 mm/0.15 in) | Nub top surface for good release of wet and sticky products | Version available without round studs at the side (25 mm indent)

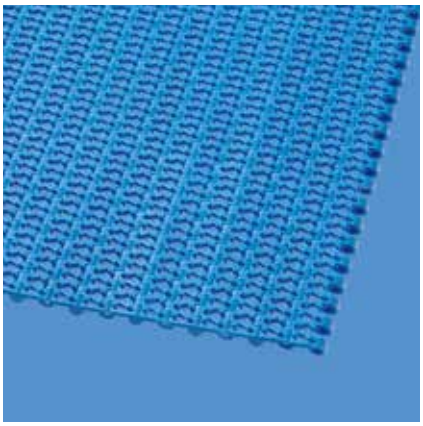

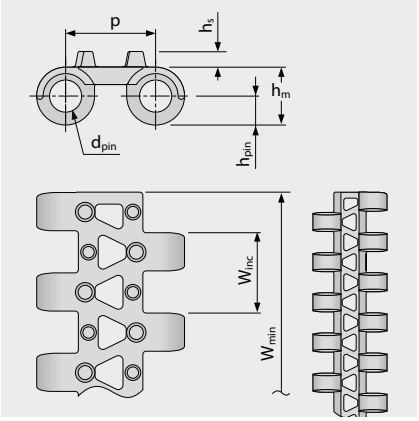

Variant specific dimensions [mm (in)]

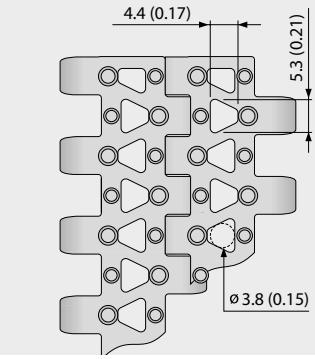

Belt dimensions

	p	d_{pin}	h_m	h_{pin}	h_s	W_{min}	W_{inc}	W_{tol}	Minimum flex radii[1]				
	Pitch	Pin Ø	Thickness	Pin position	Height	Width min.	Width Increment	Width tolerance [%]	r1 C_c x W_B	r2	r3	r4	r5
mm	14.0	5.0	9.0	4.5	2.5	25.0	12.5	±0.2	–	11.0	25.0	38.0	12.5
inch	0.55	0.2	0.35	0.18	0.1	0.98	0.49	±0.2	–	0.43	0.98	1.5	0.49

Available standard materials [3]

Belt		Pin		Nominal belt pull, straight		Weight		Width deviation	Temperature		Certificates[2]		
Material	Color	Material	Color	[N/mm]	[lb/ft]	[kg/m²]	[lb/ft²]	[%]	[°C]	[°F]	FDA	EU	MHLW
PE	BL	PE	UC	3	206	4.6	0.94	-0.1	-70/65	-94/149	●	●	●
POM	BL	PBT	BL	10	685	6.6	1.35	0.0	-45/90	-49/194	●	●	●
PP	WT	PP	WT	5	343	4.2	0.86	0.25	5/100	41/212	●	●	●

Mold to width available in: 200 mm (7.87 in)

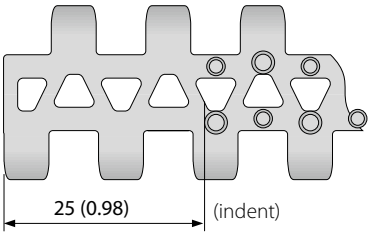

Also available with molded indent 25 mm (0.98 in)

BL (Blue), UC (Uncolored), WT (White)

All measurements and tolerances apply at 21 °C; for temperature deviations please see Prolink manual chapter 4.4 "Temperature influence".
All imperial dimensions (inches) are rounded off.

[1] Flex radii: r1 = side flex, r2 = front flex on roller, r3 = back flex on load bearing roller, r4 = back flex on Hold Down shoe, r5 = back flex on roller

[2] Complies with FDA 21 CFR | Complies with (EU) 10/2011 and (EC) 1935/2004 regulations regarding the raw materials used and the migration thresholds | Complies with Japanese MHLW Notification 370

● = available | – = not available | empty cells = not tested

[3] More materials and colors on request

S4.1 SPR | Sprockets

Wide sprocket teeth ensure superior sprocket engagement and load transmission

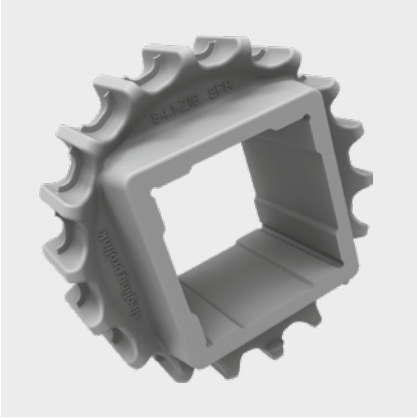

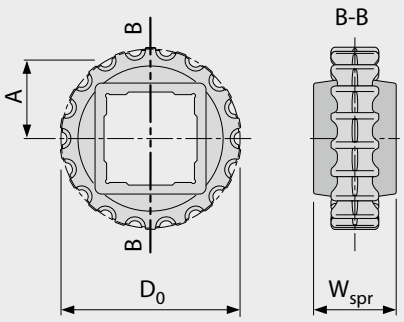

Main dimensions

Sprocket size (Number of teeth)		Z10	Z12	Z14	Z16	Z18	Z19	Z26	Z35
W_{spr}	mm	24.0	24.0	24.0	30.0	38.0	38.0	38.0	38.0
	inch	0.94	0.94	0.94	1.18	1.50	1.50	1.50	1.50
D_0	mm	47.1	56.1	65.3	74.3	83.4	88.0	119.8	160.4
	inch	1.85	2.21	2.57	2.93	3.28	3.46	4.72	6.31
A_{max}	mm	19.0	23.6	28.2	32.7	37.2	39.5	55.4	75.7
	inch	0.75	0.93	1.11	1.29	1.46	1.56	2.18	2.98
A_{min}	mm	18.1	22.8	27.5	32.0	36.6	39.0	55.0	75.4
	inch	0.71	0.90	1.08	1.26	1.44	1.53	2.17	2.97

Shaft bores (● = Round, ■ = Square; ❍ or ❑ = mold to order)

20	mm	● / ■							
25	mm		● / ■	■	●	● / ■	■		●
30	mm								●
40	mm					■	■	■	■
60	mm							■	■
0.75	inch	●	❍					●	
1	inch		● / ■	■		● / ■	■		●
1.25	inch					●			❍
1.5	inch					■	■	■	■
2.5	inch							❑	■

Material: PA, Color: LG

LG (Light gray)

All measurements and tolerances apply at 21 °C.
All imperial dimensions (inches) are rounded off.
For detailed sprocket and shaft dimensions see appendix 6.3
Number of sprockets (sprocket spacing distance) see chapter 3.2

S4.1-0 FLT PSP | ProSnap

Quick-Release for easy, quick and toolless opening and closing of the belt | One pin solution for entire belt width

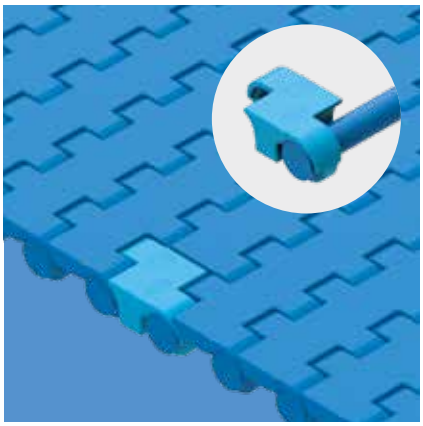

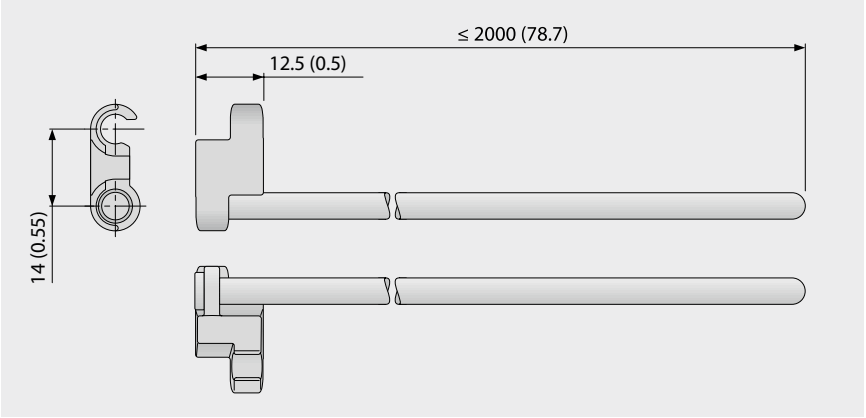

Basic data

Module		Pin	
Material	Color	Material	Length [mm (in)]
POM	LB	PBT	≤ 2000 (79)
Mold to order			
POM-MD	BL	PBT	≤ 2000 (79)

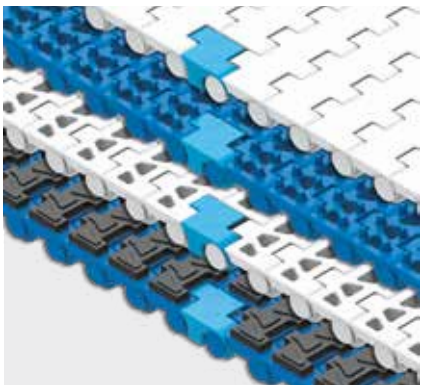

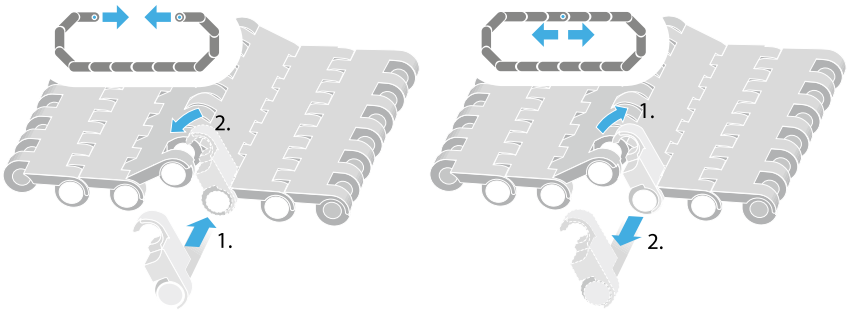

BL (Blue), LB (Light blue)

All measurements and tolerances apply at 21 °C; for temperature deviations please see Prolink manual chapter 4.4 "Temperature influence".
All imperial dimensions (inches) are rounded off.
Note: Use of accessory in a belt may impact on the minimum design radii. Please see chapter 6.3 for further information.

S4.1 FLT/NCL PMU

No cling surface to improve release of wet and sticky products and Flat top surface for dry products

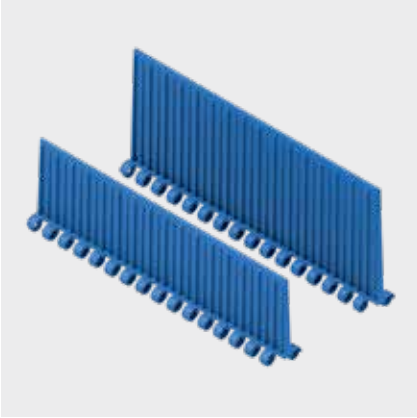

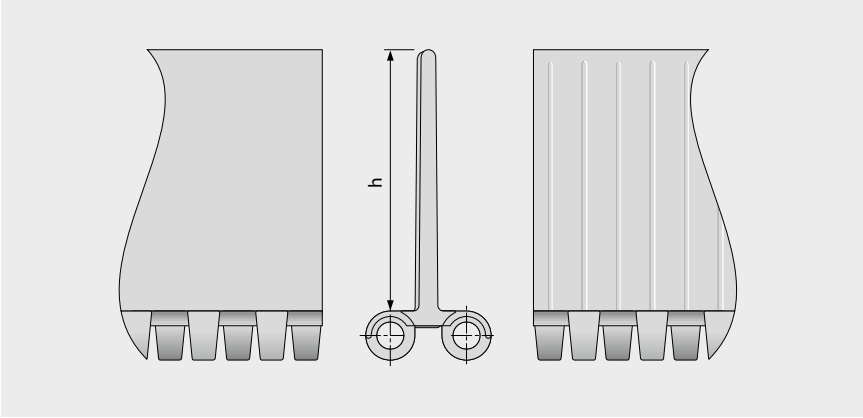

Basic data

Material	Color	Height (h)	
		51 mm 2 inch	76 mm 3 inch
PE	BL	●	mold to order
PE	WT	●	mold to order
POM	BL	●	●
POM	WT	●	mold to order
PP	BL	●	●
PP	WT	●	mold to order

Molded width: 200 mm (7.9 in)

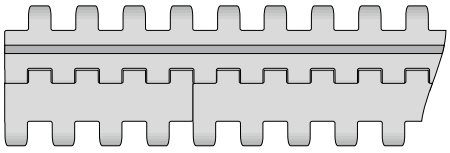

Standard configuration S4.1-0 FLT/NCL PMU

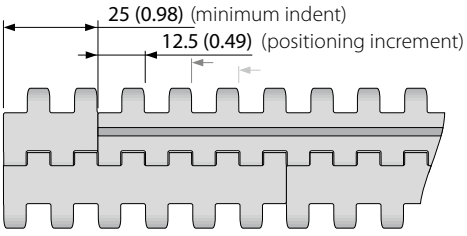

Indent configuration S4.1-0 FLT/NCL PMU

BL (Blue), WT (White)

All measurements and tolerances apply at 21 °C; for temperature deviations please see Prolink manual chapter 4.4 "Temperature influence".
All imperial dimensions (inches) are rounded off.
Note: Use of accessory in a belt may impact on the minimum design radii. Please see chapter 6.3 for further information.

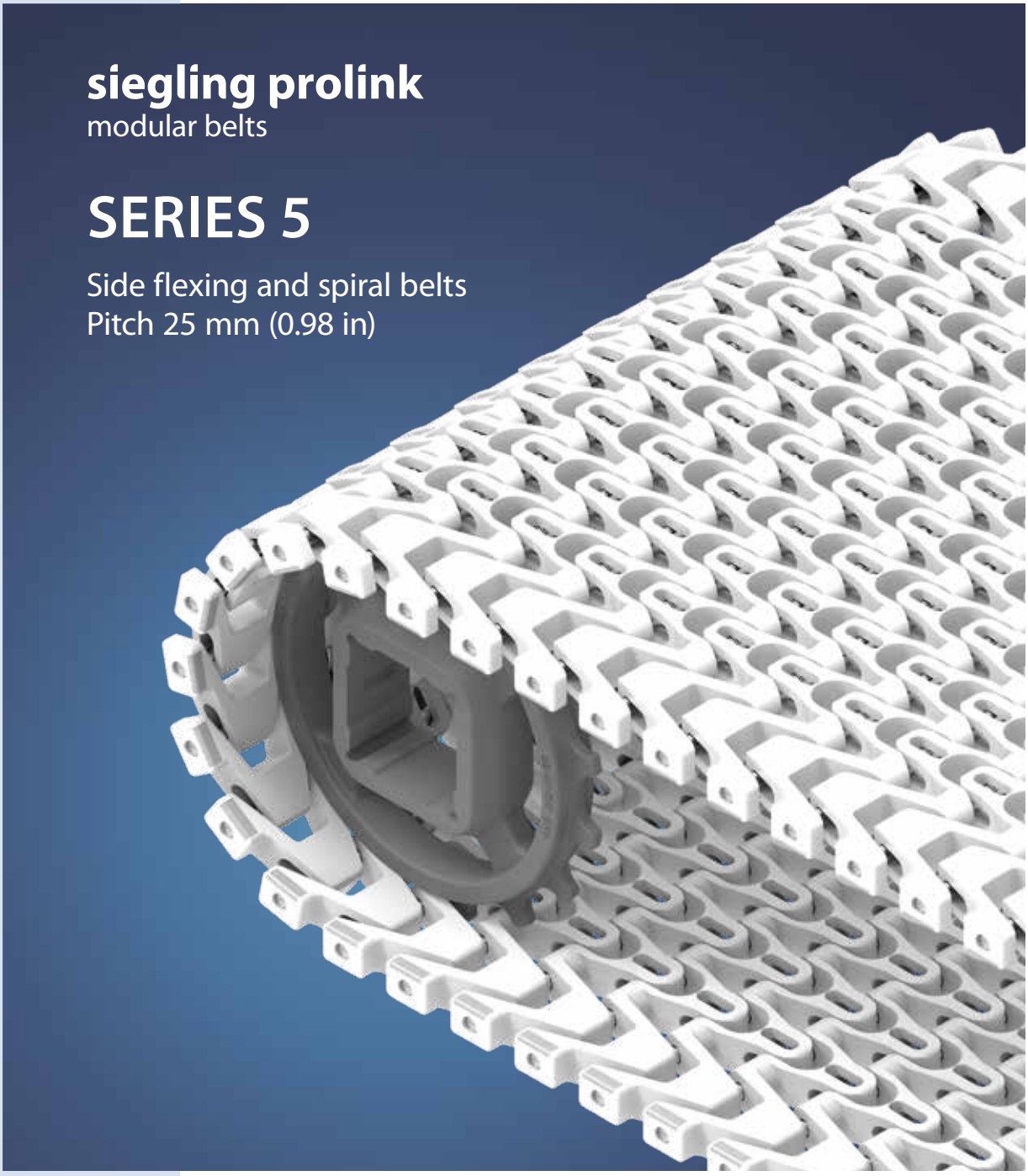
siegling prolink
modular belts
SERIES 5
Side flexing and spiral belts
Pitch 25 mm (0.98 in)

SERIES 5 | **OVERVIEW**

Side flexing and spiral belts | Pitch 25 mm (0.98 in)

Belts for light to medium-duty food and non-food applications

Side view scale 1:1

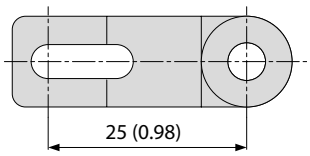

Design characteristics

- Suitable for both straight and radius conveying
- Up to 45 % open area for excellent air circulation and drainage
- Stainless steel hinge pins for high load capacity, lateral stiffness, fewer belt supports and minimum belt lifting in curves
- No potential belt edge catch points due to safe fixing of hinge pins

Basic data

Pitch	25 mm (0.98)
Belt width min.	100 mm (3.9 in), 175 mm (6.9 in) for S5 ST
Width increments	25 mm (0.98)
Hinge pins	5 mm (0.2 in) made of stainless steel

Available surface pattern and opening area

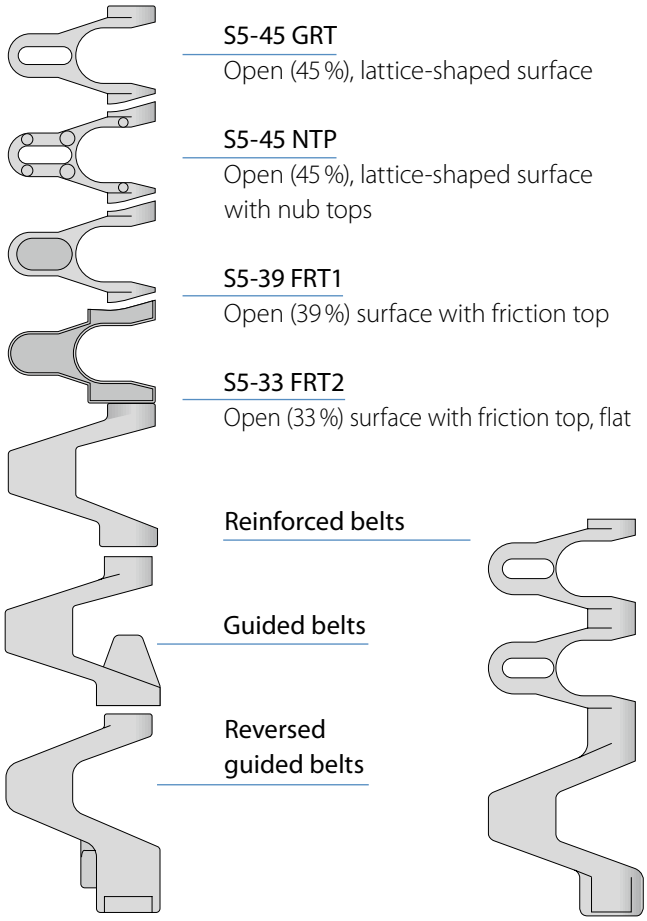

S5-45 GRT
Open (45 %), lattice-shaped surface

S5-45 NTP
Open (45 %), lattice-shaped surface with nub tops

S5-39 FRT1
Open (39 %) surface with friction top

S5-33 FRT2
Open (33 %) surface with friction top, flat

Reinforced belts

Guided belts

Reversed guided belts

Sprockets
in different sizes with round or square bore



Profiles
in different heights and designs for inclines



Side guards
in different heights for retention of bulk products



Ball-bearing modules
to minimize friction forces at the belt edge



S5-45 GRT | 45 % Opening | Grid top

Open area (45 %) for excellent air circulation and drainage | 42 % contact area (Largest opening: Ø = 10.6 mm/0.42 in) | Lattice shaped surface | Collapse factor (C_C) = 2.0

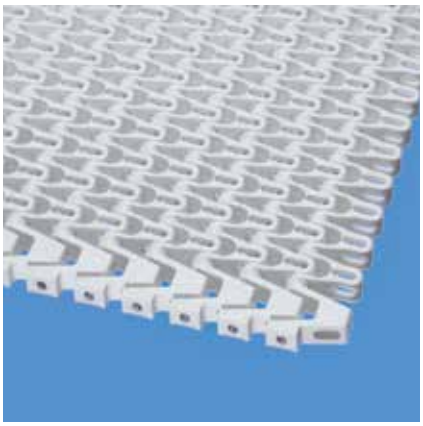

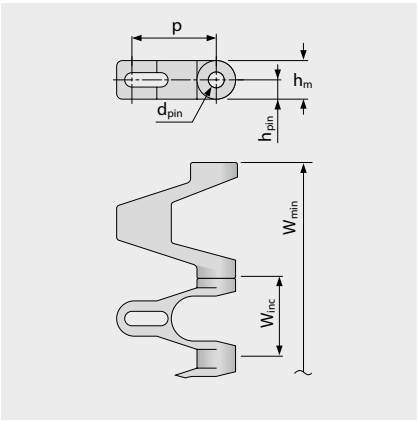

Variant specific dimensions [mm (in)]

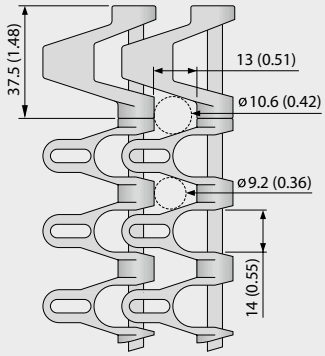

Belt dimensions

	p	d_{pin}	h_m	h_{pin}	h_s	W_{min}	W_{inc}	W_{tol}	Minimum flex radii[1]			
	Pitch	Pin Ø	Thickness	Pin position	Height	Width min.	Width Increment	Width tolerance [%]	r1 $C_c \times W_B$	r2	r3	r4	r5
mm	25.0	5.0	12.0	6.0	0.0	100.0	25.0	±0.3	2 x W_B	25.0	50.0	75.0	25.0
inch	0.98	0.2	0.47	0.24	0.0	3.94	0.98	±0.3	2 x W_B	0.98	1.97	2.95	0.98

W_B = Belt width, further information regarding r1 see page III-31

Available standard materials [3]

Belt		Pin	Nominal belt pull, straight		Nominal belt pull, curve		Weight		Width deviation	Temperature		Certificates[2]		
Material	Color	Material	[N/mm]	[lb/ft]	[N]	[lb]	[kg/m²]	[lb/ft²]	[%]	[°C]	[°F]	FDA	EU	MHLW
PE	WT/BL	SS	10	685	NR	NR	11.0	2.25	0.0	-70/65	-94/149	●	●	●
POM-CR	WT/DB/BL	SS	25	1713	1800	405	13.0	2.66	0.0	-45/90	-49/194	●	●	●
PP	WT/DB/BL	SS	18	1233	1000	225	10.0	2.05	0.0	5/100	41/212	●	●	●
Mold to order belts														
PA*	BL	SS	20	1370	1440	324	12.8	2.62	0.0	-40/120	-40/248	●	●	●

NR = not recommended

* Values valid for dry applications (RH <50 %). Belts in PA material will absorb water in wet environments, causing them to expand and reduce the nominal belt pull capacity.

BL (Blue), DB (Dark blue), WT (White)

All measurements and tolerances apply at 21 °C; for temperature deviations please see Prolink manual chapter 4.4 "Temperature influence".
All imperial dimensions (inches) are rounded off.

[1] Flex radii: r1 = side flex, r2 = front flex on roller, r3 = back flex on load bearing roller, r4 = back flex on Hold Down shoe, r5 = back flex on roller

[2] Complies with FDA 21 CFR | Complies with (EU) 10/2011 and (EC) 1935/2004 regulations regarding the raw materials used and the migration thresholds | Complies with Japanese MHLW Notification 370
● = available | – = not available | empty cells = not tested

[3] More materials and colors on request

S5-45 NTP | 45 % Opening | Nub top (round studs)

Open area (45 %) for excellent air circulation and drainage | Lattice shaped surface with 3.0 mm (0.12 in) high round studs and 8 % contact area (Largest opening: Ø = 10.6 mm/0.42 in) | Side modules without NTP-surface | Collapse factor (C_C) = 2.0

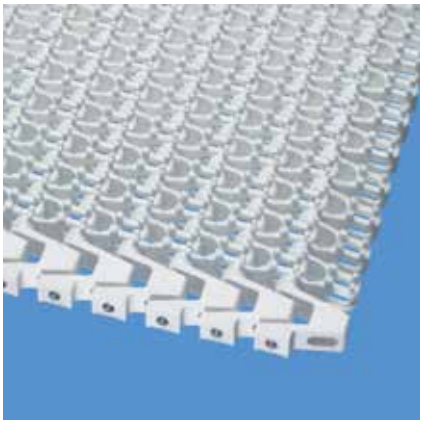

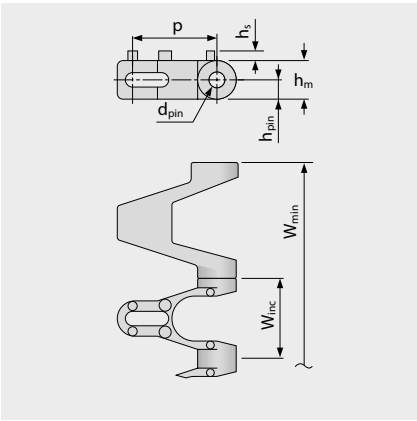

Variant specific dimensions [mm (in)]

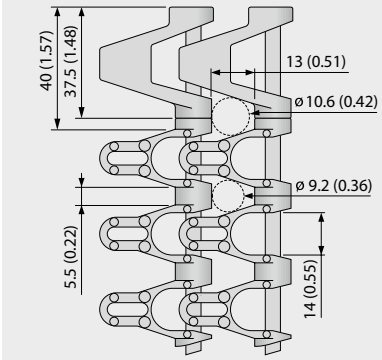

Belt dimensions

	p	d_{pin}	h_m	h_{pin}	h_s	W_{min}	W_{inc}	W_{tol}	Minimum flex radii[1]			
	Pitch	Pin Ø	Thickness	Pin position	Height	Width min.	Width Increment	Width tolerance [%]	r1 $C_c \times W_B$	r2	r3	r4	r5
mm	25.0	5.0	12.0	6.0	3.0	100.0	25.0	±0.3	2 x W_B	25.0	50.0	75.0	25.0
inch	0.98	0.2	0.47	0.24	0.12	3.94	0.98	±0.3	2 x W_B	0.98	1.97	2.95	0.98

W_B = Belt width, further information regarding r1 see page III-31

Mold to order belts [3]

Belt		Pin	Nominal belt pull, straight		Nominal belt pull, curve		Weight		Width deviation	Temperature		Certificates[2]		
Material	Color	Material	[N/mm]	[lb/ft]	[N]	[lb]	[kg/m²]	[lb/ft²]	[%]	[°C]	[°F]	FDA	EU	MHLW
PE	WT	SS	10	685	NR	NR	11.2	2.29	0.0	-70/65	-94/149	●	●	●
POM-CR	WT	SS	25	1713	1800	405	13.1	2.68	0.0	-45/90	-49/194	●	●	
PP	WT	SS	18	1233	1000	225	10.1	2.07	0.0	5/100	41/212	●	●	

NR = not recommended

☐ WT (White)

All measurements and tolerances apply at 21 °C; for temperature deviations please see Prolink manual chapter 4.4 "Temperature influence".
All imperial dimensions (inches) are rounded off.

[1] Flex radii: r1 = side flex, r2 = front flex on roller, r3 = back flex on load bearing roller, r4 = back flex on Hold Down shoe, r5 = back flex on roller

[2] Complies with FDA 21 CFR | Complies with (EU) 10/2011 and (EC) 1935/2004 regulations regarding the raw materials used and the migration thresholds | Complies with Japanese MHLW Notification 370
● = available | – = not available | empty cells = not tested

[3] More materials and colors on request

S5-39 FRT1 | 39 % Opening | Friction top (Design 1)

Excellent air circulation and drainage | Integrated friction pads (raised) increase surface friction and provide gentle grip | 8 % contact area (Largest opening: Ø = 10.6 mm/0.42 in) | Side modules without FRT-surface | Collapse factor (C_C) = 2.0

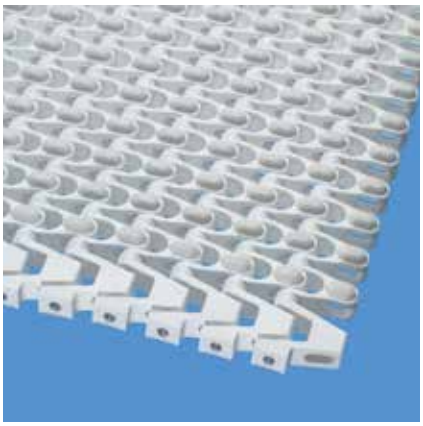

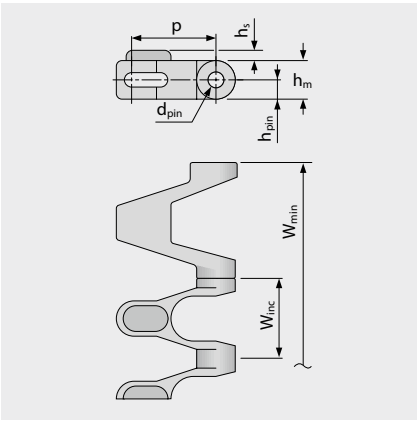

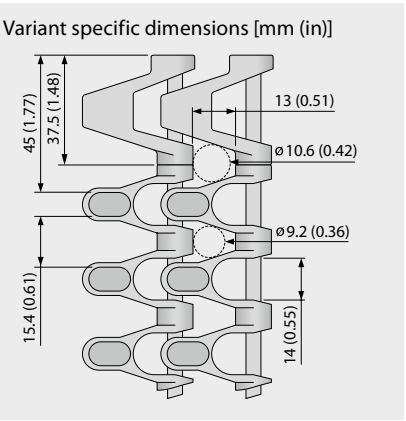

Belt dimensions

	p	d_{pin}	h_m	h_{pin}	h_s	W_{min}	W_{inc}	W_{tol}	Minimum flex radii[1]				
	Pitch	Pin Ø	Thickness	Pin position	Height	Width min.	Width Increment	Width tolerance [%]	r1 $C_c \times W_B$	r2	r3	r4	r5
mm	25.0	5.0	12.0	6.0	3.2	100.0	25.0	±0.3	2 x W_B	25.0	50.0	75.0	25.0
inch	0.98	0.2	0.47	0.24	0.13	3.94	0.98	±0.3	2 x W_B	0.98	1.97	2.95	0.98

W_B = Belt width, further information regarding r1 see page III-31

Available standard materials [3]

Belt		Pin	Rubber		Nominal belt pull, straight		Nominal belt pull, curve		Weight		Width deviation	Temperature		Certificates[2]		
Material	Color	Material	Material	Color	[N/mm]	[lb/ft]	[N]	[lb]	[kg/m²]	[lb/ft²]	[%]	[°C]	[°F]	FDA	EU	MHLW
POM-CR-PP	WT	SS	R4	BG	18	1233	1800	405	10.4	2.13	0.0	5/90	41/194			
PP	WT	SS	R4	BG	18	1233	1000	225	10.2	2.09	0.0	5/100	41/212			

BG (Beige), WT (White)

All measurements and tolerances apply at 21 °C; for temperature deviations please see Prolink manual chapter 4.4 "Temperature influence".
All imperial dimensions (inches) are rounded off.

[1] Flex radii: r1 = side flex, r2 = front flex on roller, r3 = back flex on load bearing roller, r4 = back flex on Hold Down shoe, r5 = back flex on roller

[2] Complies with FDA 21 CFR | Complies with (EU) 10/2011 and (EC) 1935/2004 regulations regarding the raw materials used and the migration thresholds | Complies with Japanese MHLW Notification 370

● = available | – = not available | empty cells = not tested

[3] More materials and colors on request

S5-33 FRT2 | 33 % Opening | Friction top (Design 2)

Open area (33 % for full FRT2 surface area) for excellent air circulation and drainage | Integrated friction pads (flat) provide gentle grip | 47 % contact area (Largest opening: Ø = 8.6 mm/0.34 in) | Side modules without FRT-surface | Collapse factor (C_C) = 2.0

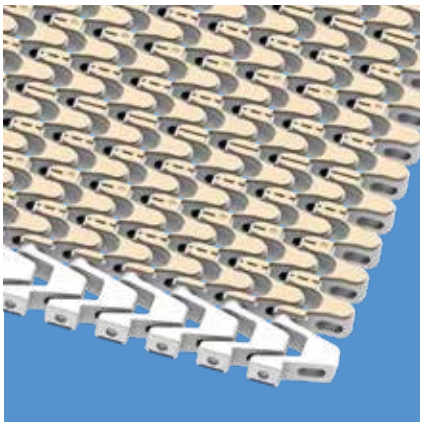

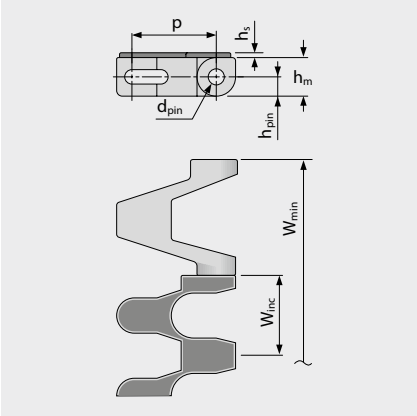

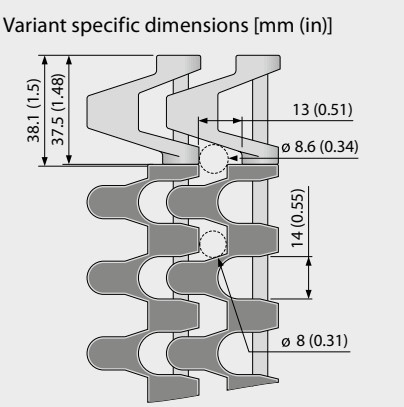

Belt dimensions

	p	d_{pin}	h_m	h_{pin}	h_s	W_{min}	W_{inc}	W_{tol}	Minimum flex radii[1]				
	Pitch	Pin Ø	Thickness	Pin position	Height	Width min.	Width Increment	Width tolerance [%]	r1 $C_c \times W_B$	r2	r3	r4	r5
mm	25.0	5.0	12.0	6.0	1.5	100.0	25.0	±0.3	2 x W_B	25.0	50.0	75.0	25.0
inch	0.98	0.2	0.47	0.24	0.06	3.94	0.98	±0.3	2 x W_B	0.98	1.97	2.95	0.98

W_B = Belt width, further information regarding r1 see page III-31

Available standard materials [3]

Belt		Pin	Rubber		Nominal belt pull, straight		Nominal belt pull, curve		Weight		Width deviation	Temperature		Certificates[2]		
Material	Color	Material	Material	Color	[N/mm]	[lb/ft]	[N]	[lb]	[kg/m²]	[lb/ft²]	[%]	[°C]	[°F]	FDA	EU	MHLW
POM-CR-PP	WT	SS	R7	BG	18	1233	1800	405	11.7	2.40	0.0	5/90	41/194	●	●	
POM-CR-PP	BL	SS	R7	BG	18	1233	1800	405	11.7	2.40	0.0	5/90	41/194	●	●	
POM-CR-PP	BL	SS	R7	BK	18	1233	1800	405	11.7	2.40	0.0	5/90	41/194	●	●	
PP	WT	SS	R7	BG	18	1233	1000	225	11.4	2.33	0.0	5/100	41/212	●	●	
PP	BL	SS	R7	BG	18	1233	1000	225	11.4	2.33	0.0	5/100	41/212	●	●	
PP	BL	SS	R7	BK	18	1233	1000	225	11.4	2.33	0.0	5/100	41/212	●	●	

BG (Beige), BK (Black), BL (Blue), WT (White)

All measurements and tolerances apply at 21 °C; for temperature deviations please see Prolink manual chapter 4.4 "Temperature influence".
All imperial dimensions (inches) are rounded off.

[1] Flex radii: r1 = side flex, r2 = front flex on roller, r3 = back flex on load bearing roller, r4 = back flex on Hold Down shoe, r5 = back flex on roller

[2] Complies with FDA 21 CFR | Complies with (EU) 10/2011 and (EC) 1935/2004 regulations regarding the raw materials used and the migration thresholds | Complies with Japanese MHLW Notification 370
● = available | – = not available | empty cells = not tested

[3] More materials and colors on request

S5-45 GRT G | 45 % Opening | Grid top · guided

Excellent air circulation and drainage | 42 % contact area (Largest opening: Ø = 10.6 mm/0.42 in) | Lattice shaped surface and Hold Down Tabs | Allows utilization of the entire belt width | Collapse factor (C_C) = 2.0

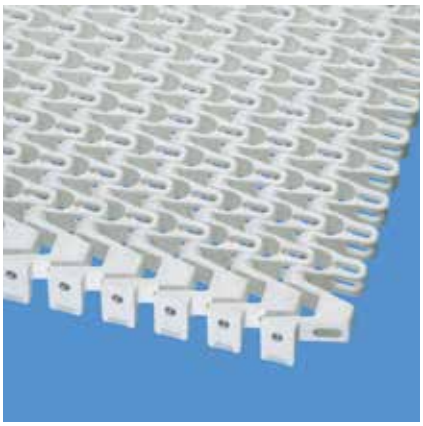

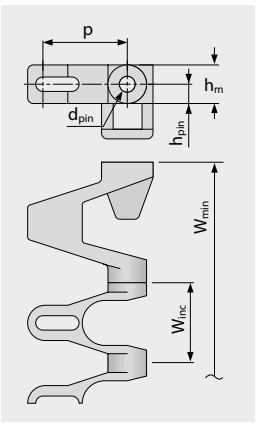

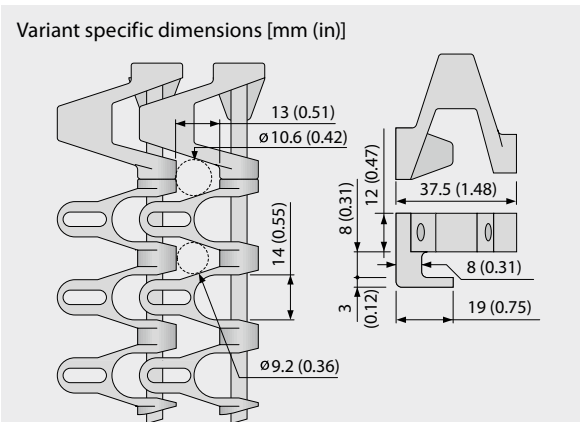

Belt dimensions

	p	d_{pin}	h_m	h_{pin}	h_s	W_{min}	W_{inc}	W_{tol}	Minimum flex radii[1]				
	Pitch	Pin Ø	Thickness	Pin position	Height	Width min.	Width Increment	Width tolerance [%]	r1 $C_c \times W_B$	r2	r3	r4	r5
mm	25.0	5.0	12.0	6.0	0.0	100.0	25.0	±0.3	2 x W_B	50.0	50.0	75.0	25.0
inch	0.98	0.2	0.47	0.24	0.0	3.94	0.98	±0.3	2 x W_B	1.97	1.97	2.95	0.98

W_B = Belt width, further information regarding r1 see page III-31

Available standard materials [3]

Belt		Pin	Nominal belt pull, straight		Nominal belt pull, curve		Weight		Width deviation	Temperature		Certificates[2]		
Material	Color	Material	[N/mm]	[lb/ft]	[N]	[lb]	[kg/m²]	[lb/ft²]	[%]	[°C]	[°F]	FDA	EU	MHLW
POM-CR	WT	SS	25	1713	1800	405	13.0	2.66	0.0	-45/90	-49/194	●	●	●
POM-CR	BL	SS	25	1713	1800	405	13.0	2.66	0.0	-45/90	-49/194	●	●	●
PP	WT	SS	18	1233	1000	225	10.0	2.05	0.0	5/100	41/212	●	●	●
Mold to order belts														
PA*	BL	SS	20	1370	1440	324	12.8	2.62	0.0	-40/120	-40/248	●	●	●
PE	WT	SS	10	685	NR	NR	11.0	2.25	0.0	-70/65	-94/149	●	●	●
POM-CR	DB	SS	25	1713	1800	405	13.0	2.66	0.0	-45/90	-49/194	●	●	●

NR = not recommended

* Values valid for dry applications (RH <50 %). Belts in PA material will absorb water in wet environments, causing them to expand and reduce the nominal belt pull capacity.

BL (Blue), DB (Dark blue), WT (White)

All measurements and tolerances apply at 21 °C; for temperature deviations please see Prolink manual chapter 4.4 "Temperature influence".
All imperial dimensions (inches) are rounded off.

[1] Flex radii: r1 = side flex, r2 = front flex on roller, r3 = back flex on load bearing roller, r4 = back flex on Hold Down shoe, r5 = back flex on roller
Attention: Restrictions on sprocket size and corresponding shaft options – please check sprocket data sheet

[2] Complies with FDA 21 CFR | Complies with (EU) 10/2011 and (EC) 1935/2004 regulations regarding the raw materials used and the migration thresholds | Complies with Japanese MHLW Notification 370
● = available | – = not available | empty cells = not tested

[3] More materials and colors on request

S5-45 NTP G | 45 % Opening | Nub top (round studs) · guided

Open area (45 %) for excellent air circulation and drainage | Lattice shaped surface with 3.0 mm (0.12 in) high round studs and 8 % contact area (Largest opening: Ø = 10.6 mm/0.42 in) | Side modules without NTP-surface | Allows utilization of the entire belt width | Collapse factor (C_C) = 2.0



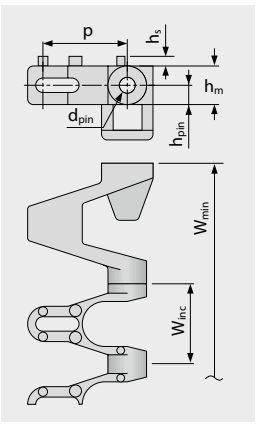

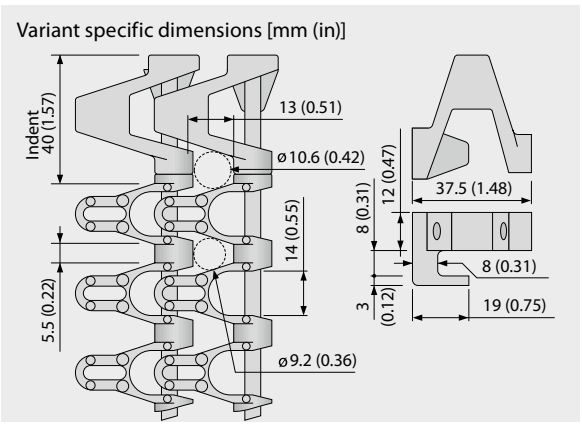

Belt dimensions

	p	d_{pin}	h_m	h_{pin}	h_s	W_{min}	W_{inc}	W_{tol}	Minimum flex radii[1]				
	Pitch	Pin Ø	Thickness	Pin position	Height	Width min.	Width Increment	Width tolerance [%]	r1 C_c x W_B	r2	r3	r4	r5
mm	25.0	5.0	12.0	6.0	3.0	100.0	25.0	±0.3	2 x W_B	50.0	50.0	75.0	25.0
inch	0.98	0.2	0.47	0.24	0.12	3.94	0.98	±0.3	2 x W_B	1.97	1.97	2.95	0.98

W_B = Belt width, further information regarding r1 see page III-31

Mold to order belts [3]

Belt		Pin	Nominal belt pull, straight		Nominal belt pull, curve		Weight		Width deviation	Temperature		Certificates[2]		
Material	Color	Material	[N/mm]	[lb/ft]	[N]	[lb]	[kg/m²]	[lb/ft²]	[%]	[°C]	[°F]	FDA	EU	MHLW
POM-CR	WT	SS	25	1713	1800	405	13.2	2.70	0.0	-45/90	-49/194	●	●	●
PP	WT	SS	18	1233	1000	225	10.2	2.09	0.0	5/100	41/212	●	●	●

☐ WT (White)

All measurements and tolerances apply at 21 °C; for temperature deviations please see Prolink manual chapter 4.4 "Temperature influence".
All imperial dimensions (inches) are rounded off.

[1] Flex radii: r1 = side flex, r2 = front flex on roller, r3 = back flex on load bearing roller, r4 = back flex on Hold Down shoe, r5 = back flex on roller
Attention: Restrictions on sprocket size and corresponding shaft options – please check sprocket data sheet

[2] Complies with FDA 21 CFR | Complies with (EU) 10/2011 and (EC) 1935/2004 regulations regarding the raw materials used and the migration thresholds | Complies with Japanese MHLW Notification 370
● = available | – = not available | empty cells = not tested

[3] More materials and colors on request

S5-39 FRT1 G | 39 % Opening | Friction top (Design 1) · guided

Excellent air circulation and drainage | Integrated friction pads (raised) increase surface friction and provide gentle grip (Largest opening: Ø = 10.6 mm/0.42 in) | Allows utilization of the entire belt width | Side modules without FRT-surface | Collapse factor (C_C) = 2.0

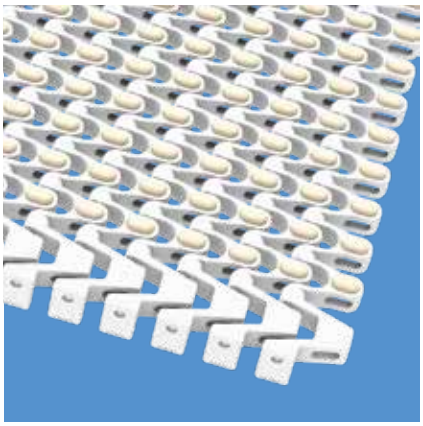

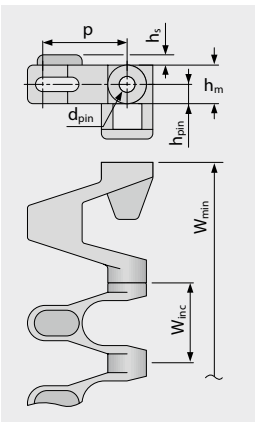

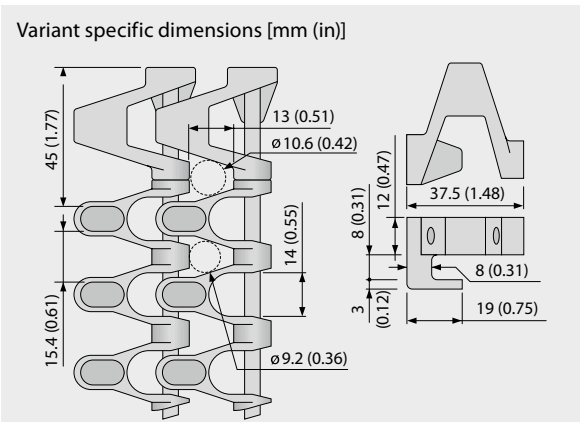

Belt dimensions

	p	d_{pin}	h_m	h_{pin}	h_s	W_{min}	W_{inc}	W_{tol}	Minimum flex radii[1]				
	Pitch	Pin Ø	Thickness	Pin position	Height	Width min.	Width Increment	Width tolerance [%]	r1 $C_c \times W_B$	r2	r3	r4	r5
mm	25.0	5.0	12.0	6.0	3.2	100.0	25.0	±0.3	2 x W_B	50.0	50.0	75.0	25.0
inch	0.98	0.2	0.47	0.24	0.13	3.94	0.98	±0.3	2 x W_B	1.97	1.97	2.95	0.98

W_B = Belt width, further information regarding r1 see page III-31

Available standard materials [3]

Belt		Pin	Rubber		Nominal belt pull, straight		Nominal belt pull, curve		Weight		Width deviation	Temperature		Certificates[2]		
Material	Color	Material	Material	Color	[N/mm]	[lb/ft]	[N]	[lb]	[kg/m²]	[lb/ft²]	[%]	[°C]	[°F]	FDA	EU	MHLW
POM-CR-PP	WT	SS	R4	BG	18	1233	1800	405	10.5	2.15	0.0	5/90	41/194			
PP	WT	SS	R4	BG	18	1233	1000	225	10.2	2.09	0.0	5/100	41/212			

BG (Beige), WT (White)

All measurements and tolerances apply at 21 °C; for temperature deviations please see Prolink manual chapter 4.4 "Temperature influence".
All imperial dimensions (inches) are rounded off.

[1] Flex radii: r1 = side flex, r2 = front flex on roller, r3 = back flex on load bearing roller, r4 = back flex on Hold Down shoe, r5 = back flex on roller
Attention: Restrictions on sprocket size and corresponding shaft options – please check sprocket data sheet

[2] Complies with FDA 21 CFR | Complies with (EU) 10/2011 and (EC) 1935/2004 regulations regarding the raw materials used and the migration thresholds | Complies with Japanese MHLW Notification 370
● = available | – = not available | empty cells = not tested

[3] More materials and colors on request

S5-33 FRT2 G | 33 % Opening | Friction top (Design 2) · guided

Open area (33 % for full FRT2 surface area) for excellent air circulation and drainage | 47 % contact area (Largest opening: Ø = 8.6 mm/0.34 in) | Integrated friction pads (flat) provide gentle grip | Allows utilization of the entire belt width | Side modules without FRT-surface | Collapse factor (C_c) = 2.0

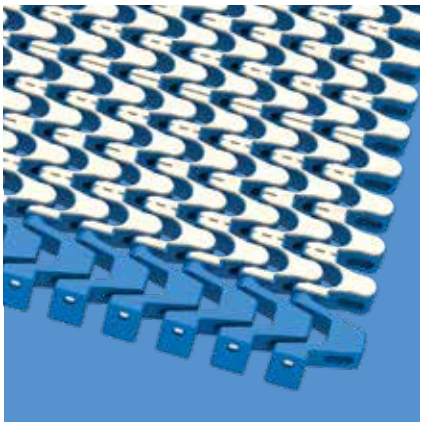

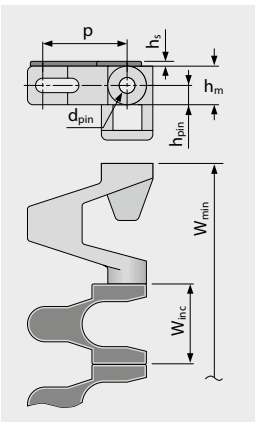

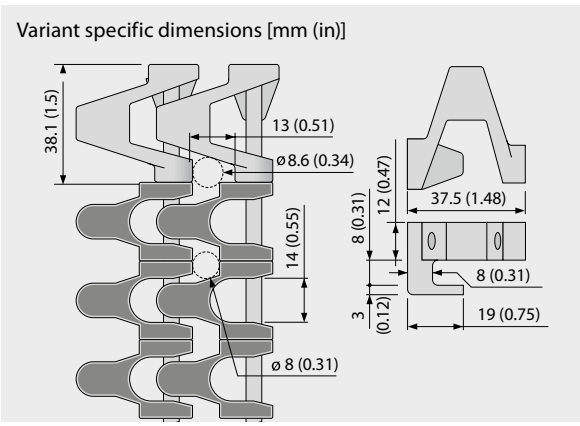

Belt dimensions

	p	d_{pin}	h_m	h_{pin}	h_s	W_{min}	W_{inc}	W_{tol}	Minimum flex radii[1]				
	Pitch	Pin Ø	Thickness	Pin position	Height	Width min.	Width Increment	Width tolerance [%]	r1 $C_c \times W_B$	r2	r3	r4	r5
mm	25.0	5.0	12.0	6.0	1.5	100.0	25.0	±0.3	2 x W_B	50.0	50.0	75.0	25.0
inch	0.98	0.2	0.47	0.24	0.06	3.94	0.98	±0.3	2 x W_B	1.97	1.97	2.95	0.98

W_B = Belt width, further information regarding r1 see page III-31

Available standard materials [3]

Belt		Pin	Rubber		Nominal belt pull, straight		Nominal belt pull, curve		Weight		Width deviation	Temperature		Certificates[2]		
Material	Color	Material	Material	Color	[N/mm]	[lb/ft]	[N]	[lb]	[kg/m²]	[lb/ft²]	[%]	[°C]	[°F]	FDA	EU	MHLW
POM-CR-PP	WT	SS	R7	BG	18	1233	1800	405	11.7	2.40	0.0	5/90	41/194	●	●	
POM-CR-PP	BL	SS	R7	BG	18	1233	1800	405	11.7	2.40	0.0	5/90	41/194	●	●	
POM-CR-PP	BL	SS	R7	BK	18	1233	1800	405	11.7	2.40	0.0	5/90	41/194	●	●	
PP	WT	SS	R7	BG	18	1233	1000	225	11.4	2.33	0.0	5/100	41/212	●	●	
PP	BL	SS	R7	BG	18	1233	1000	225	11.4	2.33	0.0	5/100	41/212	●	●	
PP	BL	SS	R7	BK	18	1233	1000	225	11.4	2.33	0.0	5/100	41/212	●	●	

BG (Beige), BK (Black), BL (Blue), WT (White)

All measurements and tolerances apply at 21 °C; for temperature deviations please see Prolink manual chapter 4.4 "Temperature influence".
All imperial dimensions (inches) are rounded off.

[1] Flex radii: r1 = side flex, r2 = front flex on roller, r3 = back flex on load bearing roller, r4 = back flex on Hold Down shoe, r5 = back flex on roller
Attention: Restrictions on sprocket size and corresponding shaft options – please check sprocket data sheet

[2] Complies with FDA 21 CFR | Complies with (EU) 10/2011 and (EC) 1935/2004 regulations regarding the raw materials used and the migration thresholds | Complies with Japanese MHLW Notification 370
● = available | – = not available | empty cells = not tested

[3] More materials and colors on request

S5-45 GRT RG | 45 % Opening | Grid top · reverse guided

Excellent air circulation and drainage | Lattice shaped surface and reversed Hold Down Tabs | 42 % contact area (Largest opening: Ø = 10.5 mm/0.41 in) | Smooth surface | Allows utilization of the entire belt width | Collapse factor (C_C) = 2.0

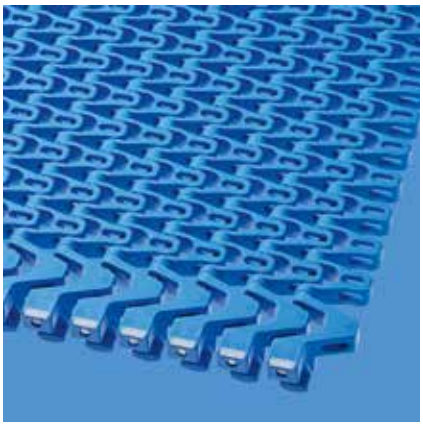

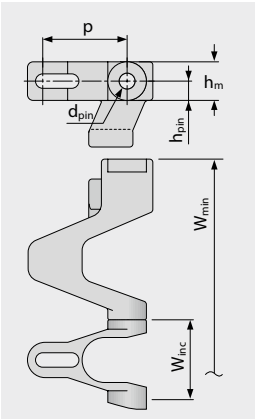

Variant specific dimensions [mm (in)]

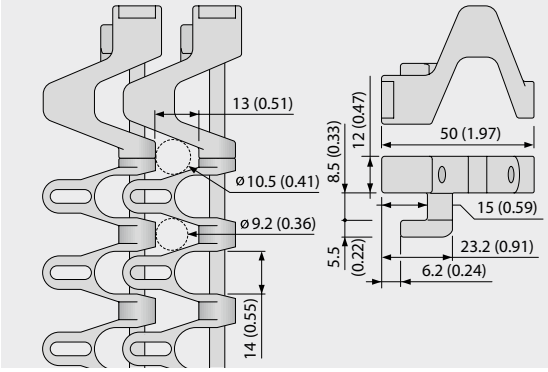

Belt dimensions

	p	d_{pin}	h_m	h_{pin}	h_s	W_{min}	W_{inc}	W_{tol}	Minimum flex radii[1]			
	Pitch	Pin Ø	Thickness	Pin position	Height	Width min.	Width Increment	Width tolerance [%]	r1 C_c x W_B	r2	r3	r4	r5
mm	25.0	5.0	12.0	6.0	0.0	125.0	25.0	±0.3	2 x W_B	50.0	50.0	75.0	25.0
inch	0.98	0.2	0.47	0.24	0.0	4.92	0.98	±0.3	2 x W_B	1.97	1.97	2.95	0.98

W_B = Belt width, further information regarding r1 see page III-31

Available standard materials [3]

Belt		Pin	Nominal belt pull, straight		Nominal belt pull, curve		Weight		Width deviation	Temperature		Certificates[2]		
Material	Color	Material	[N/mm]	[lb/ft]	[N]	[lb]	[kg/m²]	[lb/ft²]	[%]	[°C]	[°F]	FDA	EU	MHLW
POM-CR	BL	SS	25	1713	2100	472	13.0	2.66	0.0	-45/90	-49/194	●	●	●
Mold to order belts														
PE	WT	SS	10	685	NR	NR	11.0	2.25	0.0	-70/65	-94/149	●	●	●
PP	WT	SS	18	1233	1200	270	10.0	2.05	0.0	5/100	41/212	●	●	●

NR = not recommended

■ BL (Blue), □ WT (White)

All measurements and tolerances apply at 21 °C; for temperature deviations please see Prolink manual chapter 4.4 "Temperature influence".
All imperial dimensions (inches) are rounded off.

[1] Flex radii: r1 = side flex, r2 = front flex on roller, r3 = back flex on load bearing roller, r4 = back flex on Hold Down shoe, r5 = back flex on roller
Attention: Restrictions on sprocket size and corresponding shaft options – please check sprocket data sheet

[2] Complies with FDA 21 CFR | Complies with (EU) 10/2011 and (EC) 1935/2004 regulations regarding the raw materials used and the migration thresholds | Complies with Japanese MHLW Notification 370
● = available | – = not available | empty cells = not tested

[3] More materials and colors on request

S5-45 NTP RG | 45 % Opening | Nub top (round studs) · reverse guided

Excellent air circulation and drainage | With round studs for increased grip (8 % contact area, largest opening: Ø = 10.5 mm/0.41 in) | Allows utilization of the entire belt width | Side modules only available without NTP-pattern | Collapse factor (C_C) = 2.0

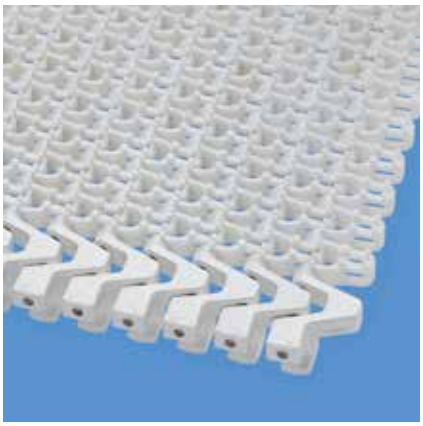

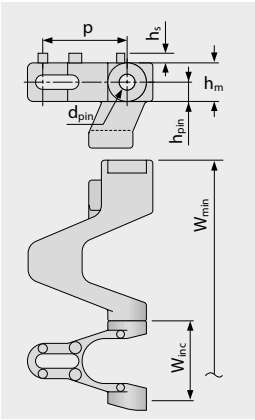

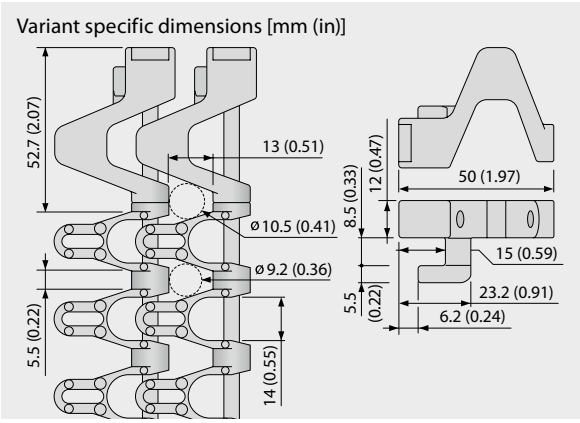

Belt dimensions

	p	d_{pin}	h_m	h_{pin}	h_s	W_{min}	W_{inc}	W_{tol}	Minimum flex radii[1]			
	Pitch	Pin Ø	Thickness	Pin position	Height	Width min.	Width Increment	Width tolerance [%]	r1 $C_c \times W_B$	r2	r3	r4	r5
mm	25.0	5.0	12.0	6.0	3.0	125.0	25.0	±0.3	2 x W_B	50.0	50.0	75.0	25.0
inch	0.98	0.2	0.47	0.24	0.12	4.92	0.98	±0.3	2 x W_B	1.97	1.97	2.95	0.98

W_B = Belt width, further information regarding r1 see page III-31

Mold to order belts [3]

Belt		Pin	Nominal belt pull, straight		Nominal belt pull, curve		Weight		Width deviation	Temperature		Certificates[2]		
Material	Color	Material	[N/mm]	[lb/ft]	[N]	[lb]	[kg/m²]	[lb/ft²]	[%]	[°C]	[°F]	FDA	EU	MHLW
POM-CR	WT	SS	25	1713	2100	472	13.2	2.7	0.0	-45/90	-49/194	●	●	●

☐ WT (White)

All measurements and tolerances apply at 21 °C; for temperature deviations please see Prolink manual chapter 4.4 "Temperature influence".
All imperial dimensions (inches) are rounded off.

[1] Flex radii: r1 = side flex, r2 = front flex on roller, r3 = back flex on load bearing roller, r4 = back flex on Hold Down shoe, r5 = back flex on roller
Attention: Restrictions on sprocket size and corresponding shaft options – please check sprocket data sheet

[2] Complies with FDA 21 CFR | Complies with (EU) 10/2011 and (EC) 1935/2004 regulations regarding the raw materials used and the migration thresholds | Complies with Japanese MHLW Notification 370
● = available | – = not available | empty cells = not tested

[3] More materials and colors on request

S5-39 FRT1 RG | 39 % Opening | Friction top (Design 1) · reverse guided

Excellent air circulation and drainage | Integrated friction pads (raised) increase surface friction and provide gentle grip (Largest opening: Ø = 10.5 mm/0.41 in) | Allows utilization of the entire belt width | Side modules without FRT-surface | Collapse factor (C_C) = 2.0

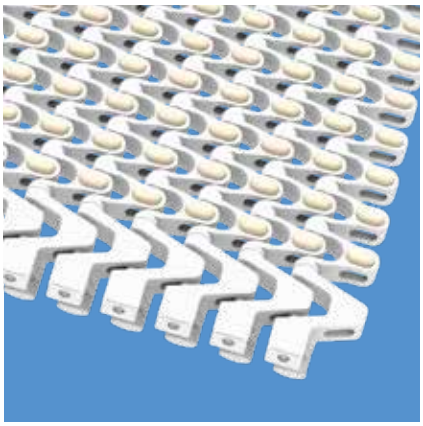

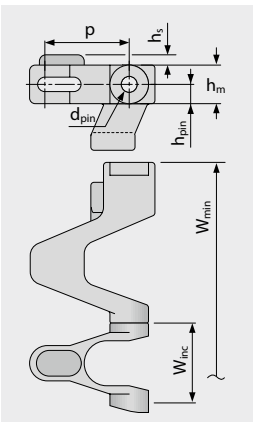

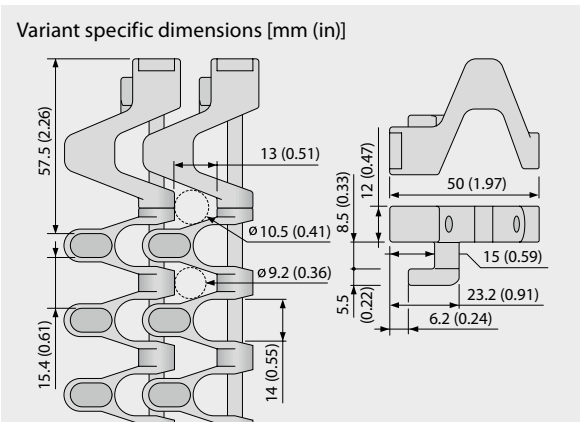

Belt dimensions

	p	d_{pin}	h_m	h_{pin}	h_s	W_{min}	W_{inc}	W_{tol}	Minimum flex radii[1]				
	Pitch	Pin Ø	Thickness	Pin position	Height	Width min.	Width Increment	Width tolerance [%]	r1 $C_c \times W_B$	r2	r3	r4	r5
mm	25.0	5.0	12.0	6.0	3.2	125.0	25.0	±0.3	2 x W_B	50.0	50.0	75.0	25.0
inch	0.98	0.2	0.47	0.24	0.13	4.92	0.98	±0.3	2 x W_B	1.97	1.97	2.95	0.98

W_B = Belt width, further information regarding r1 see page III-31

Available standard materials [3]

Belt		Pin	Rubber		Nominal belt pull, straight		Nominal belt pull, curve		Weight		Width deviation	Temperature		Certificates[2]		
Material	Color	Material	Material	Color	[N/mm]	[lb/ft]	[N]	[lb]	[kg/m²]	[lb/ft²]	[%]	[°C]	[°F]	FDA	EU	MHLW
POM-CR-PP	WT	SS	R4	BG	18	1233	2100	472	10.2	2.09	0.0	5/90	-49/194			

BG (Beige), WT (White)

All measurements and tolerances apply at 21 °C; for temperature deviations please see Prolink manual chapter 4.4 "Temperature influence".
All imperial dimensions (inches) are rounded off.

[1] Flex radii: r1 = side flex, r2 = front flex on roller, r3 = back flex on load bearing roller, r4 = back flex on Hold Down shoe, r5 = back flex on roller
Attention: Restrictions on sprocket size and corresponding shaft options – please check sprocket data sheet

[2] Complies with FDA 21 CFR | Complies with (EU) 10/2011 and (EC) 1935/2004 regulations regarding the raw materials used and the migration thresholds | Complies with Japanese MHLW Notification 370
● = available | – = not available | empty cells = not tested

[3] More materials and colors on request

S5-33 FRT2 RG | 33 % Opening | Friction top (Design 2) · reverse guided

Open area (33 % for full FRT2 surface area) for excellent air circulation and drainage | 47 % contact area (Largest opening: Ø = 8.6 mm/0.34 in) | Integrated friction pads (flat) provide gentle grip | Allows utilization of the entire belt width | Side modules without FRT-surface | Collapse factor (C_C) = 2.0

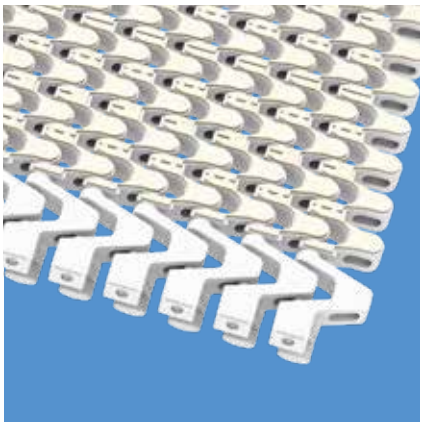

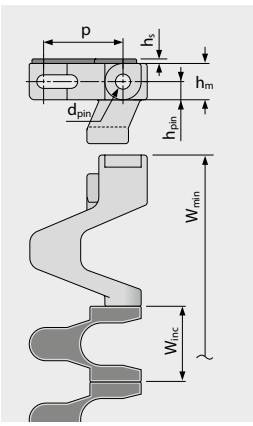

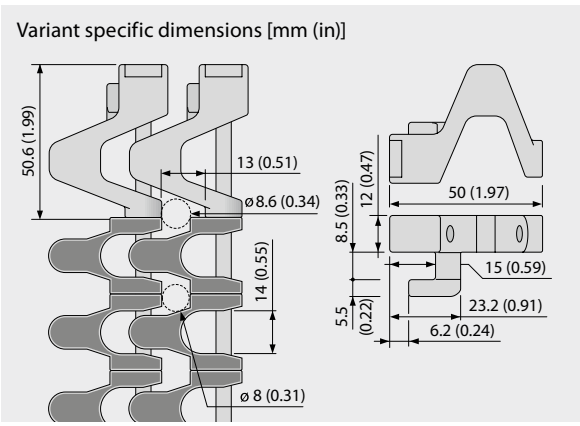

Belt dimensions

	p	d_{pin}	h_m	h_{pin}	h_s	W_{min}	W_{inc}	W_{tol}	Minimum flex radii[1]				
	Pitch	Pin Ø	Thickness	Pin position	Height	Width min.	Width Increment	Width tolerance [%]	r1 $C_c \times W_B$	r2	r3	r4	r5
mm	25.0	5.0	12.0	6.0	1.5	125.0	25.0	±0.3	2 x W_B	50.0	50.0	75.0	25.0
inch	0.98	0.2	0.47	0.24	0.06	4.92	0.98	±0.3	2 x W_B	1.97	1.97	2.95	0.98

W_B = Belt width, further information regarding r1 see page III-31

Available standard materials [3]

Belt		Pin	Rubber		Nominal belt pull, straight		Nominal belt pull, curve		Weight		Width deviation	Temperature		Certificates[2]		
Material	Color	Material	Material	Color	[N/mm]	[lb/ft]	[N]	[lb]	[kg/m²]	[lb/ft²]	[%]	[°C]	[°F]	FDA	EU	MHLW
POM-CR-PP	BL	SS	R7	BG	18	1233	2100	472	11.4	2.33	0.0	5/90	-49/194	●	●	
POM-CR-PP	WT	SS	R7	BG	18	1233	2100	472	11.4	2.33	0.0	5/90	-49/194	●	●	
POM-CR-PP	BL	SS	R7	BK	18	1233	2100	472	11.4	2.33	0.0	5/90	-49/194	●	●	

BG (Beige), BK (Black), BL (Blue), WT (White)

All measurements and tolerances apply at 21 °C; for temperature deviations please see Prolink manual chapter 4.4 "Temperature influence".
All imperial dimensions (inches) are rounded off.

[1] Flex radii: r1 = side flex, r2 = front flex on roller, r3 = back flex on load bearing roller, r4 = back flex on Hold Down shoe, r5 = back flex on roller
Attention: Restrictions on sprocket size and corresponding shaft options – please check sprocket data sheet

[2] Complies with FDA 21 CFR | Complies with (EU) 10/2011 and (EC) 1935/2004 regulations regarding the raw materials used and the migration thresholds | Complies with Japanese MHLW Notification 370
● = available | – = not available | empty cells = not tested

[3] More materials and colors on request

S5-45 GRT ST | 45 % Opening | Grid top · strong

Excellent air circulation and drainage | Lattice shaped surface (Largest opening: Ø = 13.0 mm/0.51 in) | Version with reinforced brick-laid side modules (75 mm/2.9 in and 100 mm/3.9 in) increases belt pull capacity | Collapse factor (C_C) = 2.0

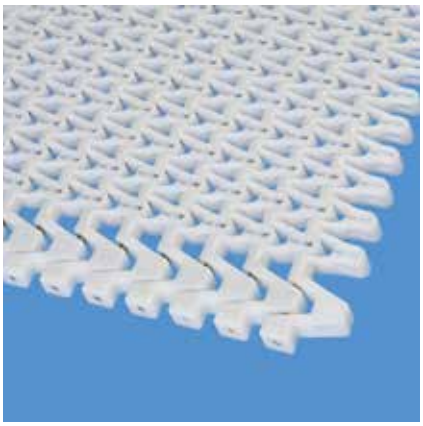

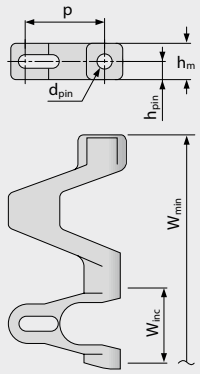

Variant specific dimensions [mm (in)]

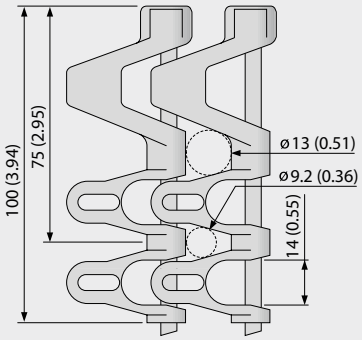

Belt dimensions

	p	d_{pin}	h_m	h_{pin}	h_s	W_{min}	W_{inc}	W_{tol}	Minimum flex radii[1]			
	Pitch	Pin Ø	Thickness	Pin position	Height	Width min.	Width Increment	Width tolerance [%]	r1 $C_c \times W_B$	r2	r3	r4	r5
mm	25.0	5.0	12.0	6.0	0.0	175.0	25.0	±0.3	2 x W_B	25.0	50.0	75.0	25.0
inch	0.98	0.2	0.47	0.24	0.0	6.89	0.98	±0.3	2 x W_B	0.98	1.97	2.95	0.98

W_B = Belt width, further information regarding r1 see page III-31

Available standard materials [3]

Belt		Pin	Nominal belt pull, straight		Nominal belt pull, curve		Weight		Width deviation	Temperature		Certificates[2]		
Material	Color	Material	[N/mm]	[lb/ft]	[N]	[lb]	[kg/m²]	[lb/ft²]	[%]	[°C]	[°F]	FDA	EU	MHLW
POM-CR	WT	SS	25	1713	2100	472	13.2	2.7	0.0	-45/90	-49/194	●	●	●
POM-CR	BL	SS	25	1713	2100	472	13.2	2.7	0.0	-45/90	-49/194	●	●	●
PP	WT	SS	18	1233	1200	270	10.2	2.09	0.0	5/100	41/212	●	●	●
PP	BL	SS	18	1233	1200	270	10.2	2.09	0.0	5/100	41/212	●	●	●
Mold to order belts														
PA*	BL	SS	20	1370	1680	378	13.0	2.66	0.0	-40/120	-40/248	●	●	●
PE	WT	SS	10	685	NR	NR	11.1	2.27	0.0	-70/65	-94/149	●	●	●
POM-CR	DB	SS	25	1713	2100	472	13.2	2.7	0.0	-45/90	-49/194	●	●	●
PP	DB	SS	18	1233	1200	270	10.2	2.09	0.0	5/100	41/212	●	●	●

NR = not recommended

* Values valid for dry applications (RH <50 %). Belts in PA material will absorb water in wet environments, causing them to expand and reduce the nominal belt pull capacity.

BL (Blue), DB (Dark blue), WT (White)

All measurements and tolerances apply at 21 °C; for temperature deviations please see Prolink manual chapter 4.4 "Temperature influence".
All imperial dimensions (inches) are rounded off.

[1] Flex radii: r1 = side flex, r2 = front flex on roller, r3 = back flex on load bearing roller, r4 = back flex on Hold Down shoe, r5 = back flex on roller

[2] Complies with FDA 21 CFR | Complies with (EU) 10/2011 and (EC) 1935/2004 regulations regarding the raw materials used and the migration thresholds | Complies with Japanese MHLW Notification 370
● = available | – = not available | empty cells = not tested

[3] More materials and colors on request

S5-45 NTP ST | 45 % Opening | Nub top (round studs) · strong

Excellent air circulation and drainage | With round studs for increased grip (8 % contact area, largest opening: Ø = 13.0 mm/ 0.51 in) | Version with reinforced brick-laid side modules increases belt pull capacity | Side modules only available without NTP-pattern | Collapse factor (C_C) = 2.0

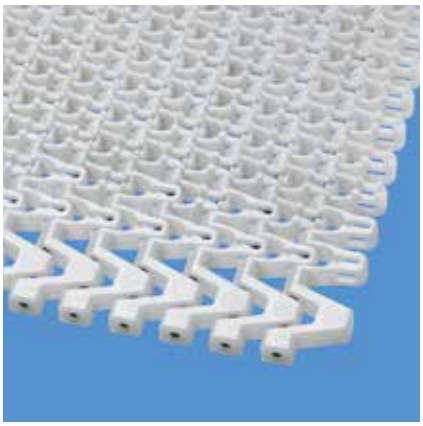

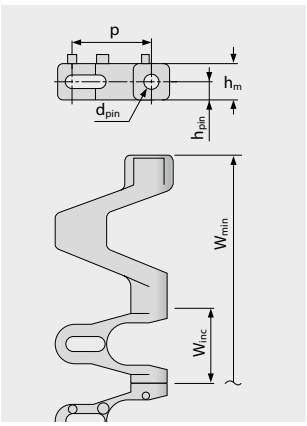

Variant specific dimensions [mm (in)]

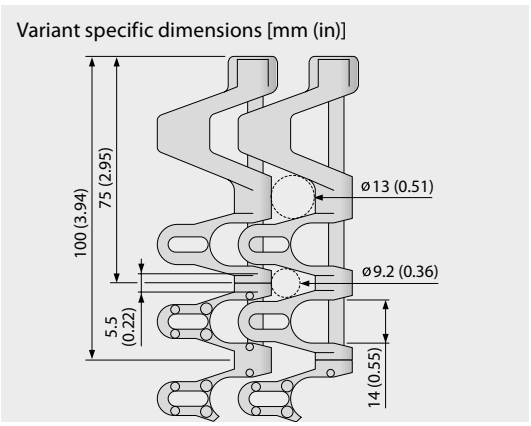

Belt dimensions

	p	d_{pin}	h_m	h_{pin}	h_s	W_{min}	W_{inc}	W_{tol}	Minimum flex radii[1]			
	Pitch	Pin Ø	Thickness	Pin position	Height	Width min.	Width Increment	Width tolerance [%]	r1 $C_c \times W_B$	r2	r3	r4	r5
mm	25.0	5.0	12.0	6.0	3.0	175.0	25.0	±0.3	2 x W_B	25.0	50.0	75.0	25.0
inch	0.98	0.2	0.47	0.24	0.12	6.89	0.98	±0.3	2 x W_B	0.98	1.97	2.95	0.98

W_B = Belt width, further information regarding r1 see page III-31

Mold to order belts [3]

Belt		Pin	Nominal belt pull, straight		Nominal belt pull, curve		Weight		Width deviation	Temperature		Certificates[2]		
Material	Color	Material	[N/mm]	[lb/ft]	[N]	[lb]	[kg/m²]	[lb/ft²]	[%]	[°C]	[°F]	FDA	EU	MHLW
PP	WT	SS	18	1233	1200	270	10.2	2.09	0.0	5/100	41/212	●	●	●

☐ WT (White)

All measurements and tolerances apply at 21 °C; for temperature deviations please see Prolink manual chapter 4.4 "Temperature influence".
All imperial dimensions (inches) are rounded off.

[1] Flex radii: r1 = side flex, r2 = front flex on roller, r3 = back flex on load bearing roller, r4 = back flex on Hold Down shoe, r5 = back flex on roller

[2] Complies with FDA 21 CFR | Complies with (EU) 10/2011 and (EC) 1935/2004 regulations regarding the raw materials used and the migration thresholds | Complies with Japanese MHLW Notification 370
● = available | – = not available | empty cells = not tested

[3] More materials and colors on request

S5-39 FRT1 ST | 39 % Opening | Friction top (Design 1) · strong

Excellent air circulation and drainage | Integrated friction pads (raised) increase surface friction and provide gentle grip (Largest opening: Ø = 13.0 mm/0.51 in) | Reinforced side modules increase belt pull capacity | Side modules without FRT-surface | Collapse factor (C_C) = 2.0

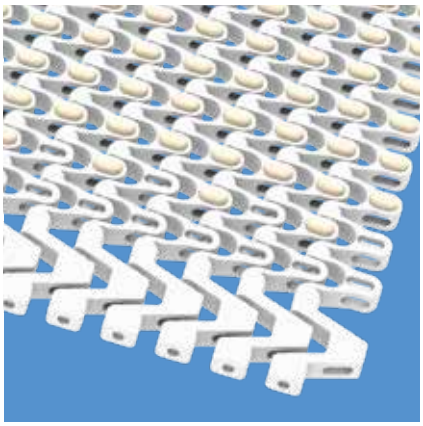

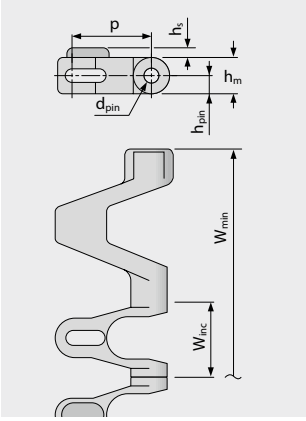

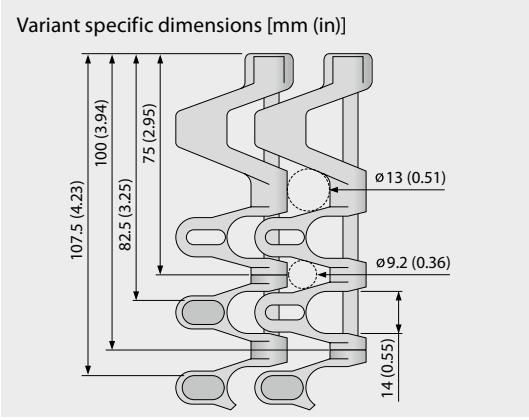

Belt dimensions

	p	d_{pin}	h_m	h_{pin}	h_s	W_{min}	W_{inc}	W_{tol}	Minimum flex radii[1]				
	Pitch	Pin Ø	Thickness	Pin position	Height	Width min.	Width Increment	Width tolerance [%]	r1 $C_c \times W_B$	r2	r3	r4	r5
mm	25.0	5.0	12.0	6.0	3.2	175.0	25.0	±0.3	2 x W_B	25.0	50.0	75.0	25.0
inch	0.98	0.2	0.47	0.24	0.13	6.89	0.98	±0.3	2 x W_B	0.98	1.97	2.95	0.98

W_B = Belt width, further information regarding r1 see page III-31

Available standard materials [3]

Belt		Pin	Rubber		Nominal belt pull, straight		Nominal belt pull, curve		Weight		Width deviation	Temperature		Certificates[2]		
Material	Color	Material	Material	Color	[N/mm]	[lb/ft]	[N]	[lb]	[kg/m²]	[lb/ft²]	[%]	[°C]	[°F]	FDA	EU	MHLW
POM-CR-PP	WT	SS	R4	BG	18	1233	2100	472	10.5	2.15	0.0	5/90	41/194			
PP	WT	SS	R4	BG	18	1233	1200	270	10.2	2.09	0.0	5/100	41/212			

BG (Beige), WT (White)

All measurements and tolerances apply at 21 °C; for temperature deviations please see Prolink manual chapter 4.4 "Temperature influence".
All imperial dimensions (inches) are rounded off.

[1] Flex radii: r1 = side flex, r2 = front flex on roller, r3 = back flex on load bearing roller, r4 = back flex on Hold Down shoe, r5 = back flex on roller

[2] Complies with FDA 21 CFR | Complies with (EU) 10/2011 and (EC) 1935/2004 regulations regarding the raw materials used and the migration thresholds | Complies with Japanese MHLW Notification 370

● = available | – = not available | empty cells = not tested

[3] More materials and colors on request

S5-33 FRT2 ST | 33 % Opening | Friction top (Design 2) · strong

Open area (33 % for full FRT2 surface area) for excellent air circulation and drainage | 47 % contact area (Largest opening: Ø = 13.0 mm/0.51 in) | Lattice shaped surface | Version with reinforced brick-laid side modules increases belt pull capacity | Collapse factor (C_C) = 2.0

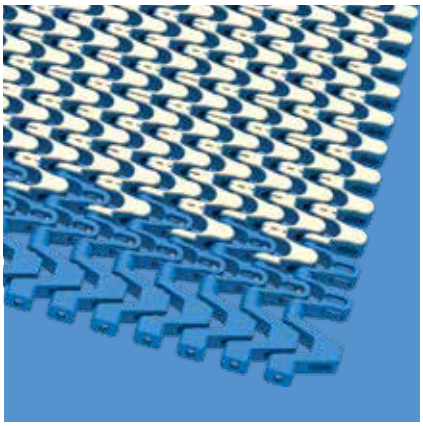

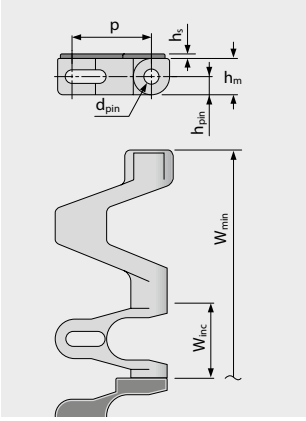

Variant specific dimensions [mm (in)]

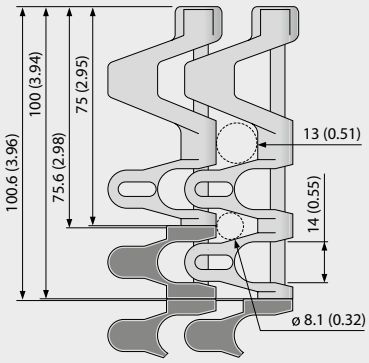

Belt dimensions

	p	d_{pin}	h_m	h_{pin}	h_s	W_{min}	W_{inc}	W_{tol}	Minimum flex radii[1]				
	Pitch	Pin Ø	Thickness	Pin position	Height	Width min.	Width Increment	Width tolerance [%]	r1 $C_c \times W_B$	r2	r3	r4	r5
mm	25.0	5.0	12.0	6.0	1.5	175.0	25.0	±0.3	2 x W_B	25.0	50.0	75.0	25.0
inch	0.98	0.2	0.47	0.24	0.06	6.89	0.98	±0.3	2 x W_B	0.98	1.97	2.95	0.98

W_B = Belt width, further information regarding r1 see page III-31

Available standard materials [3]

Belt		Pin	Rubber		Nominal belt pull, straight		Nominal belt pull, curve		Weight		Width deviation	Temperature		Certificates[2]		
Material	Color	Material	Material	Color	[N/mm]	[lb/ft]	[N]	[lb]	[kg/m²]	[lb/ft²]	[%]	[°C]	[°F]	FDA	EU	MHLW
POM-CR-PP	BL	SS	R7	BG	18	1233	2100	472	12.0	2.46	0.0	5/90	41/194	●	●	
POM-CR-PP	WT	SS	R7	BG	18	1233	2100	472	12.0	2.46	0.0	5/90	41/194	●	●	
POM-CR-PP	BL	SS	R7	BK	18	1233	2100	472	12.0	2.46	0.0	5/90	41/194	●	●	
PP	BL	SS	R7	BG	18	1233	1200	270	11.4	2.33	0.0	5/100	41/212	●	●	
PP	WT	SS	R7	BG	18	1233	1200	270	11.4	2.33	0.0	5/100	41/212	●	●	
PP	BL	SS	R7	BK	18	1233	1200	270	11.4	2.33	0.0	5/100	41/212	●	●	

Comment: ST types combinable with standard center curve modules, NTP, FRT.
ST types not combinable with Guided (G), Side Guards (SG) or Bearing Tab (BT). Please contact us should you require small curve radii.

BG (Beige), BK (Black), BL (Blue), WT (White)

All measurements and tolerances apply at 21 °C; for temperature deviations please see Prolink manual chapter 4.4 "Temperature influence".
All imperial dimensions (inches) are rounded off.

[1] Flex radii: r1 = side flex, r2 = front flex on roller, r3 = back flex on load bearing roller, r4 = back flex on Hold Down shoe, r5 = back flex on roller

[2] Complies with FDA 21 CFR | Complies with (EU) 10/2011 and (EC) 1935/2004 regulations regarding the raw materials used and the migration thresholds | Complies with Japanese MHLW Notification 370
● = available | – = not available | empty cells = not tested

[3] More materials and colors on request

S5 ST/S11-45 GRT CW | 45 % Opening | Grid top | Clockwise or right hand curve

Combination of high belt pull capacity and small radii in one directional curve layouts | Excellent air circulation and drainage | 42 % contact area (Largest opening: Ø = 13 mm/0.51 in) | Lattice shaped surface | SS pins for high stiffness | Collapse factor (C_C) = 1.45

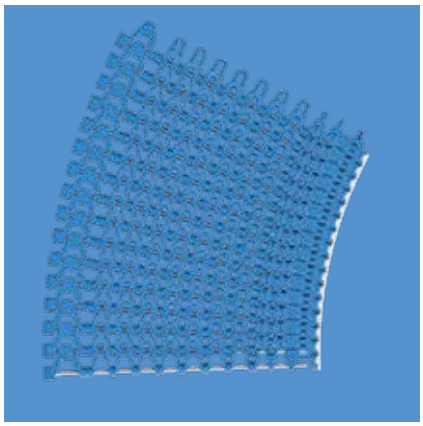

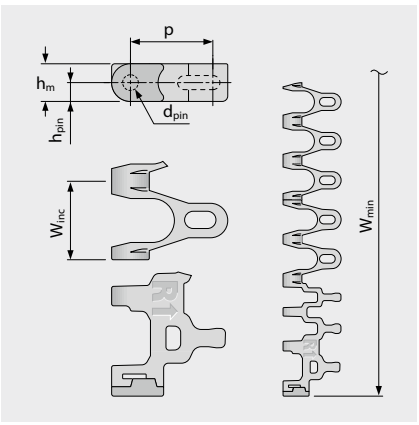

Variant specific dimensions [mm (in)]

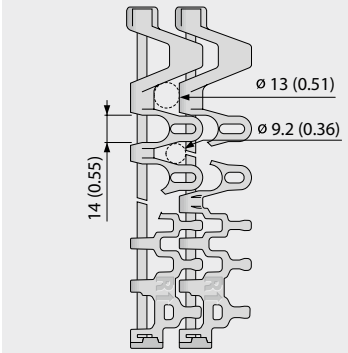

Belt dimensions

	p	d_{pin}	h_m	h_{pin}	h_s	W_{min}	W_{inc}	W_{tol}	Minimum flex radii[1]				
	Pitch	Pin Ø	Thickness	Pin position	Height	Width min.	Width Increment	Width tolerance [%]	r1 $C_c \times W_B$	r2	r3	r4	r5
mm	25.0	5.0	12.0	6.0	0.0	175.0	25.0	±0.3	1.45 x W_B	25.0	50.0	75.0	25.0
inch	0.98	0.2	0.47	0.24	0.0	6.89	0.98	±0.3	1.45 x W_B	0.98	1.97	2.95	0.98

W_B = Belt width, further information regarding r1 see page III-31

Available standard materials [3]

Belt		Pin	Nominal belt pull, straight		Nominal belt pull, curve		Weight		Width deviation	Temperature		Certificates[2]		
Material	Color	Material	[N/mm]	[lb/ft]	[N]	[lb]	[kg/m²]	[lb/ft²]	[%]	[°C]	[°F]	FDA	EU	MHLW
POM-CR	WT	SS	25	1713	2100	472	13.2	2.70	0.0	-45/90	-49/194	●	●	●
POM-CR	BL	SS	25	1713	2100	472	13.2	2.70	0.0	-45/90	-49/194	●	●	●
PP	WT	SS	18	1233	1200	270	10.2	2.09	0.2	5/100	41/212	●	●	●
PP	BL	SS	18	1233	1200	270	10.2	2.09	0.2	5/100	41/212	●	●	●
Mold to order belts														
PA*	BL	SS	20	1370	1680	378	13.0	2.66	0.6	-40/120	-40/248	●	●	●

* Values valid for dry applications (RH <50 %). Belts in PA material will absorb water in wet environments, causing them to expand and reduce the nominal belt pull capacity.

BL (Blue), WT (White)

All measurements and tolerances apply at 21 °C; for temperature deviations please see Prolink manual chapter 4.4 "Temperature influence".
All imperial dimensions (inches) are rounded off.

[1] Flex radii: r1 = side flex, r2 = front flex on roller, r3 = back flex on load bearing roller, r4 = back flex on Hold Down shoe, r5 = back flex on roller

[2] Complies with FDA 21 CFR | Complies with (EU) 10/2011 and (EC) 1935/2004 regulations regarding the raw materials used and the migration thresholds | Complies with Japanese MHLW Notification 370
● = available | – = not available | empty cells = not tested

[3] More materials and colors on request

S5-45 GRT BT / S5-45 GRT BT ASM | 45 % Opening | Bearing Tab Module*

Ball-bearing support to minimize friction force at the belt edge (high speed, reduce dust, save energy) | Collapse factor (C_C) = 2.0

* S5-45 GRT BT modules will be delivered without ball-bearings. S5-45 GRT BT ASM will be delivered with ball-bearings.



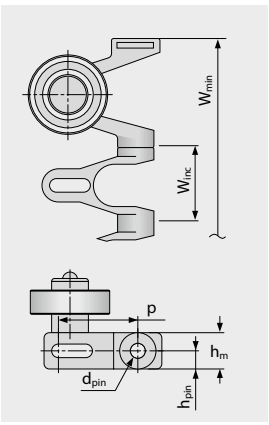

Variant specific dimensions [mm (in)]

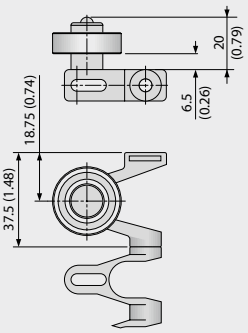

Standard configuration:
BT in every 3rd row
(minimum every 2nd row)

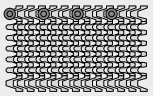

CW or CCW

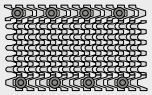

S-Curve

Belt dimensions

	p	d_{pin}	h_m	h_{pin}	h_s	W_{min}	W_{inc}	W_{tol}	Minimum flex radii[1]			
	Pitch	Pin Ø	Thickness	Pin position	Height	Width min.	Width Increment	Width tolerance [%]	r1 $C_c \times W_B$	r2	r3	r4	r5
mm	25.0	5.0	12.0	6.0	0.0	100.0	25.0	±0.3	2 x W_B	50.0	50.0	75.0	25.0
inch	0.98	0.2	0.47	0.24	0.0	3.94	0.98	±0.3	2 x W_B	1.97	1.97	2.95	0.98

W_B = Belt width, further information regarding r1 see page III-31

Available standard materials [3]

Belt		Pin	Nominal belt pull, straight		Nominal belt pull, curve		Weight**		Width deviation	Temperature		Certificates[2]		
Material	Color	Material	[N/mm]	[lb/ft]	[N]	[lb]	[kg/m²]	[lb/ft²]	[%]	[°C]	[°F]	FDA	EU	MHLW
POM-CR	BL	SS	25	1713	1800	405	13.0	2.66	0.0	-45/90	-49/194	●	●	●
Mold to order belts														
POM-CR	DB	SS	25	1713	1800	405	13.0	2.66	0.0	-45/90	-49/194	●	●	●

** Belt weight: Please calculate 18 g extra for each ball-bearing

Additional information

Compatible belt types: S5-45 GRT / NTP / (FRT1 / FRT2 in PP)
Friction coefficient in curve: 0.04
Standard belt configuration: BT in every 3rd row (min. every 2nd row). CCW and CW –> BT on the outside of the curve. S-curve –> BT on both sides. Reduced spacing will improve smooth belt running behaviour
Smallest sprocket size: Depends on belt configuration (BT every 2nd row –> min. sprocket Z11 – only with RD hub)
Ball-bearing: Recommended Ball-bearing DIN 625-6000 2RS (or similar)

■ DB (Dark blue)

All measurements and tolerances apply at 21 °C; for temperature deviations please see Prolink manual chapter 4.4 "Temperature influence".
All imperial dimensions (inches) are rounded off.

[1] Flex radii: r1 = side flex, r2 = front flex on roller, r3 = back flex on load bearing roller, r4 = back flex on Hold Down shoe, r5 = back flex on roller

[2] Belt without ball-bearing: Complies with FDA 21 CFR | Complies with (EU) 10/2011 and (EC) 1935/2004 regulations regarding the raw materials used and the migration thresholds | Complies with Japanese MHLW Notification 370
● = available | – = not available | empty cells = not tested

[3] More materials and colors on request

S5 SPR | Sprockets



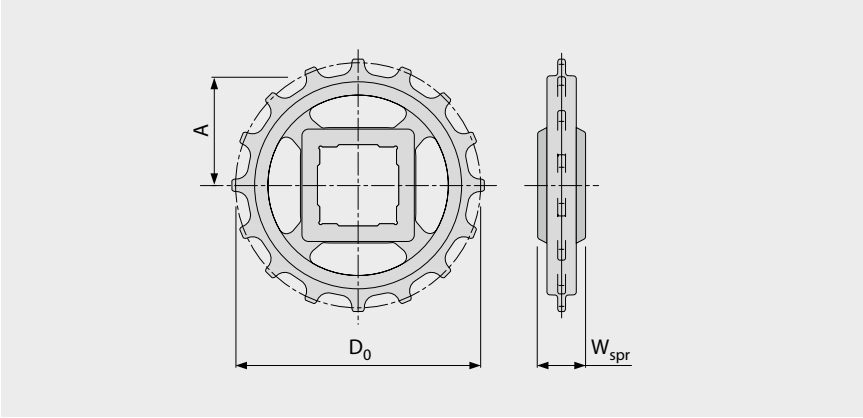

Main dimensions

Sprocket size (Number of teeth)		Z6	Z9	Z11	Z12	Z16	Z18	Z20
W_{spr}	mm	24.0	24.0	24.0	24.0	24.0	24.0	24.0
	inch	0.94	0.94	0.94	0.94	0.94	0.94	0.94
D_0	mm	49.6	72.6	88.0	95.8	127.2	142.8	158.5
	inch	1.95	2.86	3.46	3.77	5.01	5.62	6.24
A_{max}	mm	18.8	30.3	38.0	41.9	57.6	65.4	73.3
	inch	0.74	1.19	1.50	1.65	2.27	2.57	2.89
A_{min}	mm	16.3	28.5	36.5	40.5	56.5	64.4	72.4
	inch	0.64	1.12	1.44	1.59	2.22	2.54	2.85

Shaft bores (● = Round, ■ = Square; ❍ or ❑ = mold to order; * = not possible with S5 RG and G belts)

25	mm		● / ■*	●	● / ■	●	●	❍
30	mm		● / ■*	●	●	●	●	●
40	mm			■*	● / ■	❍ / ■	● / ■	❍ / ■
0.75	inch	●*						
1	inch		● / ❑*	●	● / ❑	●	❍	●
1.25	inch		❍ / ❑*	❍	●	●	❍	●
1.5	inch			■*	● / ■	● / ■	❍ / ■	● / ■

Material: PA, Color: LG

LG (Light gray)

All measurements and tolerances apply at 21 °C.
All imperial dimensions (inches) are rounded off.
For detailed sprocket and shaft dimensions see appendix 6.3
Number of sprockets (sprocket spacing distance) see chapter 3.2
Sprocket installation see chapter 5.2

S5-45 GRT PMC

Open version (45 %) base module for drainage



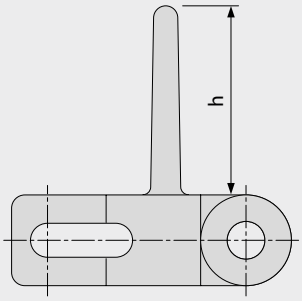

Basic data

Material	Color	Height (h)	
		25 mm 1 inch	50 mm 2 inch
PE	WT	●	●
POM	BL	●	●
POM	DB	mold to order	mold to order
POM	UC	mold to order	mold to order
POM	WT	●	●
PP	DB	mold to order	mold to order
PP	WT	●	●

Molded width: 100 mm (3.9 in)

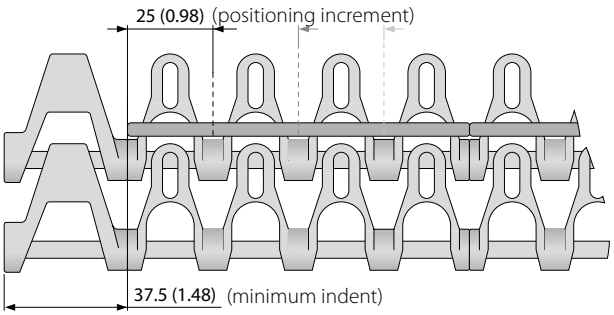

PMC also available
for G, RG, ST types.

G = Indent 37.5 (1.48)
RG = Indent 50 (1.97)
ST = Indent 75 (2.95)

BL (Blue), DB (Dark blue), UC (Uncolored), WT (White)

All measurements and tolerances apply at 21 °C; for temperature deviations please see Prolink manual chapter 4.4 "Temperature influence".
All imperial dimensions (inches) are rounded off.
Note: Use of accessory in a belt may impact on the minimum design radii. Please see chapter 6.3 for further information.

S5 SG | Side guards

For retention of bulk products

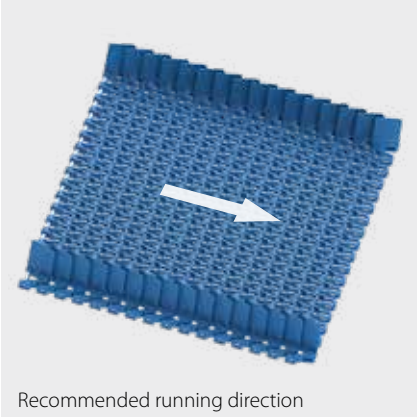

Recommended running direction



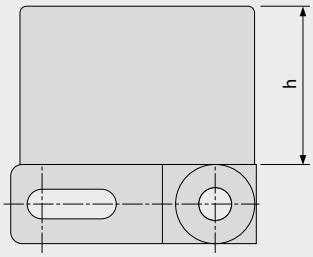

Basic data

Material	Color	Height (h)	
		25 mm 1 inch	50 mm 2 inch
POM-CR	BL	●	●
POM-CR	WT	mold to order	mold to order

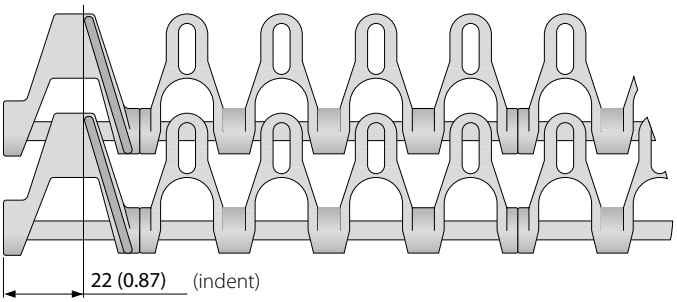

BL (Blue), WT (White)

All measurements and tolerances apply at 21 °C; for temperature deviations please see Prolink manual chapter 4.4 "Temperature influence".
All imperial dimensions (inches) are rounded off.
Note: Use of accessory in a belt may impact on the minimum design radii. Please see chapter 6.3 for further information.

SERIES 5 | **INSTALLATION NOTES**

Side flexing and spiral belt | Pitch 25 mm (0.98 in)

Preferred travel direction

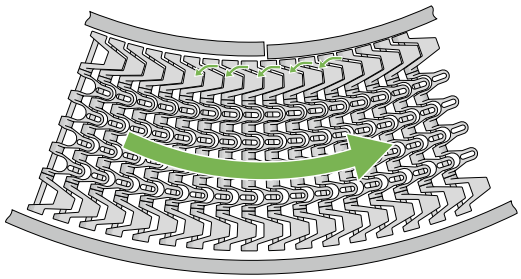

Curve conveyor

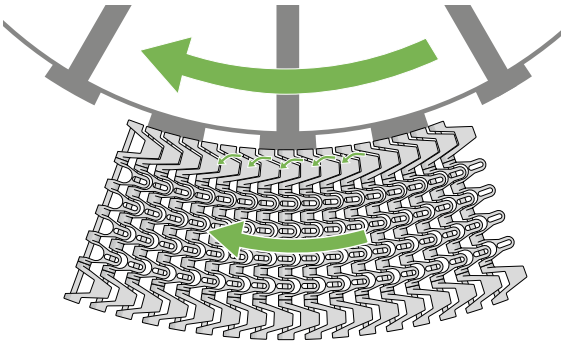

Cage driven spiral

Curve direction S5 -> CW (ClockWise) and CCW (Counter ClockWise)

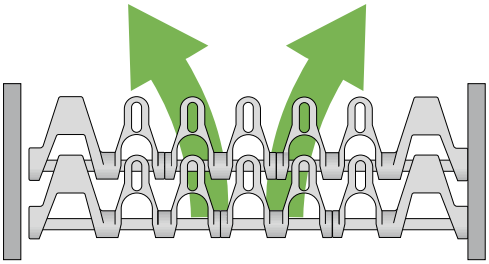

Curve direction S5 ST/S11 Combo -> Belt CW Clockwise

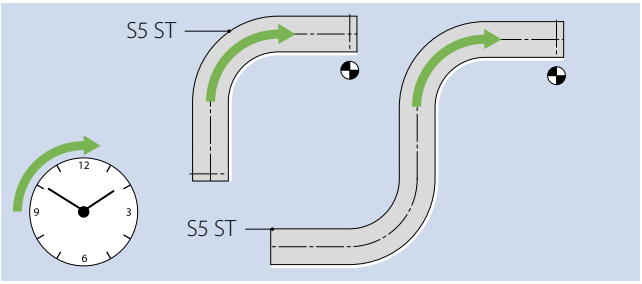

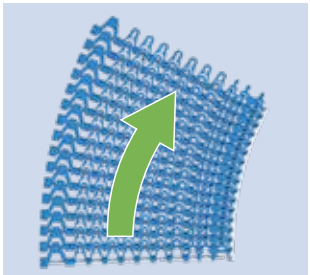

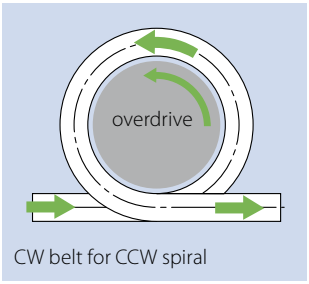

CW belt for CCW spiral

Sprocket installation

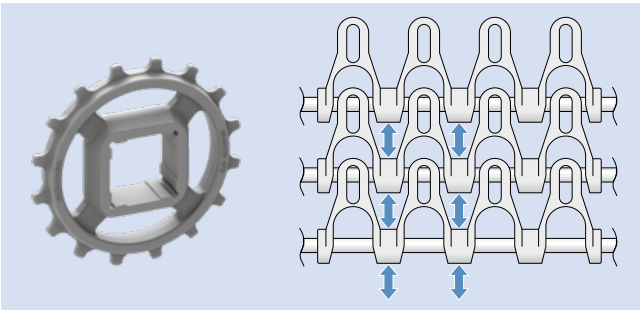

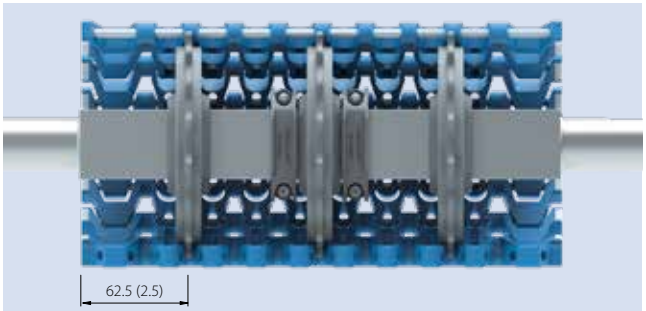



Further information in chapter 3 and 5

MOVEMENT SYSTEMS

siegling prolink
modular belts

SERIES 6.1

Straight running belts
Pitch 50 mm (1.97 in)

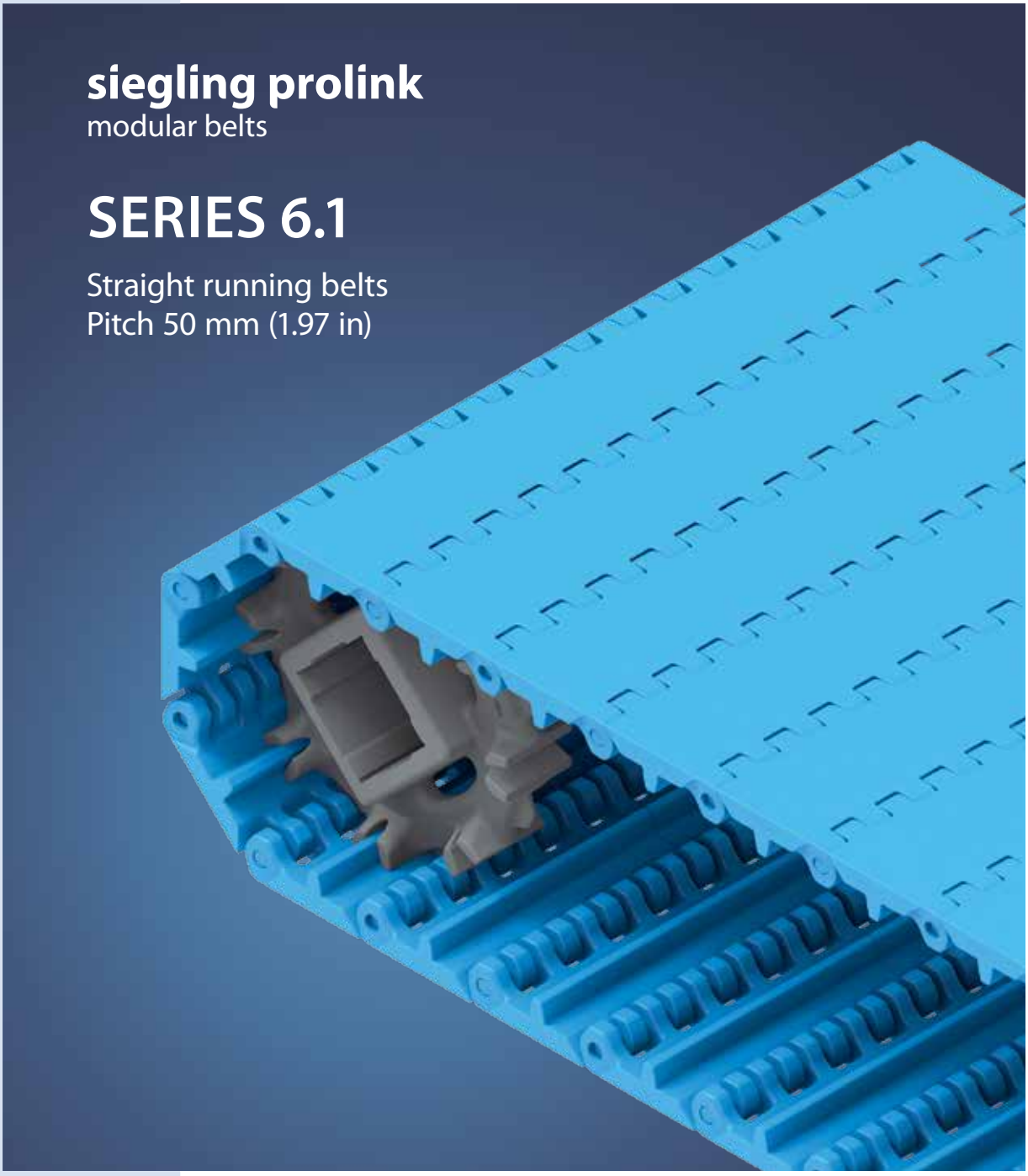

SERIES 6.1 | **OVERVIEW**

Straight running belts | Pitch 50 mm (1.97 in)

Belts for medium to heavy-duty, hygiene-critical applications

Side view scale 1:1

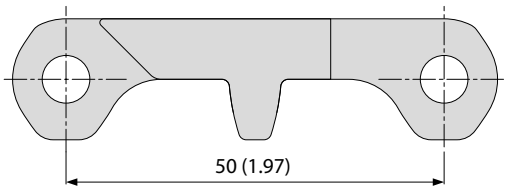

Design characteristics

- Wide modules and eyelets for less soiling
- Hinges that open wide, wide channels on the underside and a continuous drive bar for an easy-to-clean design
- Robust design and smooth, cut-resistant surface (depending on material)
- Special sprocket design with enhanced tooth engagement for excellent force transmission

Basic data

Pitch	50 mm (1.97 in)
Belt width min.	40 mm (1.57 in)
Width increments	20 mm (0.8 in)
Hinge pins	6 mm (0.24 in), made of plastic (PBT, PP, PE, POM-MD, PP-MD). One-piece up to a belt width of 1200 mm (47 in).

Available surface pattern and opening area

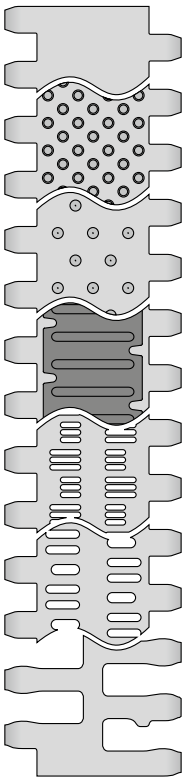

S6.1-0 FLT
Closed, smooth surface

S6.1-0 NTP
Closed surface and round studs

S6.1-0 CTP
Closed surface and pointed studs

S6.1-0 FRT1
Closed surface with friction top

S6.1-21 FLT
Open (21 %), smooth surface

S6.1-23 FLT
Open (23 %), smooth surface

S6.1-36 FLT
Open (36 %), smooth surface

NSF Certified

NSF-compliant from these certified Forbo plants: Huntersville (USA), Malacky (Slovakia), Tlalnepantla (Mexico)

Sprockets
in different sizes with round or square bore



Profiles
in different heights and designs for inclines

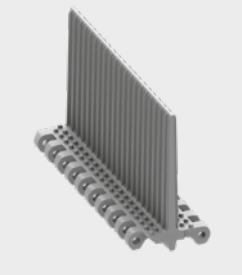

Side guards
in different heights for retention of bulk products

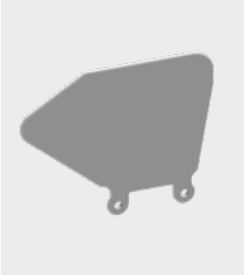

Hold Down Tabs
Hold Down Tabs for additional guiding



ProSnap
Quick-Release for easy opening and closing of the belt



S6.1-0 FLT | 0 % Opening | Flat top

Closed, smooth surface | Flat top surface | Easy-to-clean

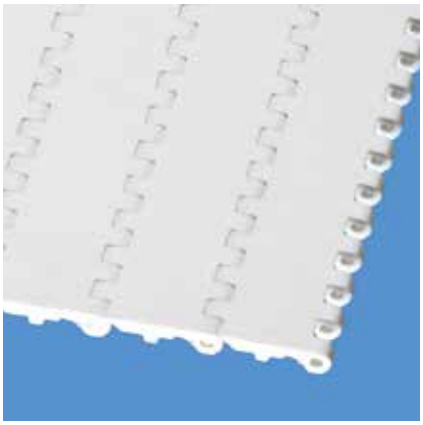

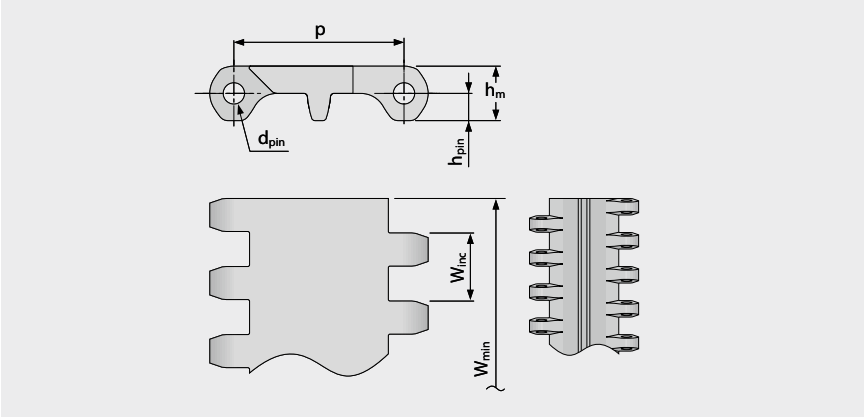

Belt dimensions

	p	d_{pin}	h_m	h_{pin}	h_s	W_{min}	W_{inc}	W_{tol}	Minimum flex radii[1]				
	Pitch	Pin Ø	Thickness	Pin position	Height	Width min.	Width Increment	Width tolerance [%]	r1 C_c x W_B	r2	r3	r4	r5
mm	50.0	6.0	16.0	8.0	0.0	40.0	20.0	±0.2	–	50.0	100.0	150.0	50.0
inch	1.97	0.24	0.63	0.31	0.0	1.57	0.79	±0.2	–	1.97	3.94	5.91	1.97

Available standard materials [3]

Belt		Pin		Nominal belt pull, straight		Weight		Width deviation	Temperature		Certificates[2]		
Material	Color	Material	Color	[N/mm]	[lb/ft]	[kg/m²]	[lb/ft²]	[%]	[°C]	[°F]	FDA	EU	MHLW
PA*	BL	PBT	UC	30	2056	12.9	2.64	-0.0	-40/120	-40/248	●	●	●
PE	WT/LB	PE	WT/LB	13	891	9.4	1.93	-0.65	-70/65	-94/149	●	●	●
PE-MD	BL	POM-MD	BL	13	891	9.8	2.01	-0.65	-70/65	-94/149	●	●	●
PP-MD	BL	PP-MD	BL	18	1233	9.0	1.84	-0.0	5/100	41/212	●	●	●
POM	WT/LB	PBT	UC/LB	30	2056	13.4	2.74	-0.65	-45/90	-49/194	●	●	●
POM-CR	WT/LB	PBT	UC/LB	30	2056	13.4	2.74	-0.65	-45/90	-49/194	●	●	●
POM-MD	BL	POM-MD	BL	30	2056	13.7	2.81	-0.65	-45/90	-49/194	●	●	●
PP	WT/LB	PP	WT/LB	18	1233	8.3	1.7	-0.0	5/100	41/212	●	●	●
Mold to order belts													
PK	BL/WT	PK	BL	22	1507	11.5	2.36	-0.20	-45/120	-49/248	●	●	●
TPC1	LB	PBT	UC	13	891	11.6	2.38	-0.65	-25/80	-13/176	●	●	●

Mold to width available in: 100 mm (3.94 in), 140 mm (5.51 in), 200 mm (7.87 in), 220 mm (8.66 in), 400 mm (15.75 in)

* Values valid for dry applications (RH <50 %). Belts in PA material will absorb water in wet environments, causing them to expand and reduce the nominal belt pull capacity.

BL (Blue), LB (Light blue), UC (Uncolored), WT (White)

All measurements and tolerances apply at 21 °C; for temperature deviations please see Prolink manual chapter 4.4 "Temperature influence".
All imperial dimensions (inches) are rounded off.

[1] Flex radii: r1 = side flex, r2 = front flex on roller, r3 = back flex on load bearing roller, r4 = back flex on Hold Down shoe, r5 = back flex on roller

[2] Complies with FDA 21 CFR | Complies with (EU) 10/2011 and (EC) 1935/2004 regulations regarding the raw materials used and the migration thresholds | Complies with Japanese MHLW Notification 370

● = available | – = not available | empty cells = not tested

[3] More materials and colors on request

S6.1-0 NTP | 0 % Opening | Nub top (round studs)

Closed surface and round studs | 6 % contact area | Nub top surface for good release of wet and sticky products | Easy-to-clean



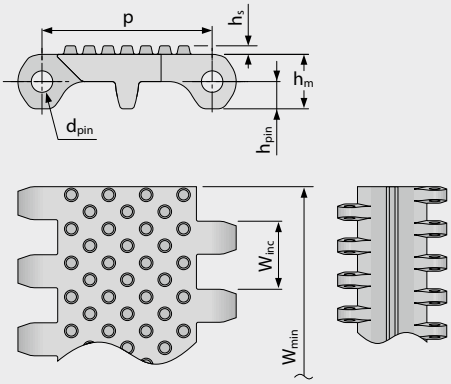

Belt dimensions

	p	d_{pin}	h_m	h_{pin}	h_s	W_{min}	W_{inc}	W_{tol}	Minimum flex radii[1]				
	Pitch	Pin Ø	Thickness	Pin position	Height	Width min.	Width Increment	Width tolerance [%]	r1 C_c x W_B	r2	r3	r4	r5
mm	50.0	6.0	16.0	8.0	2.5	40.0	20.0	±0.2	–	50.0	100.0	150.0	50.0
inch	1.97	0.24	0.63	0.31	0.1	1.57	0.79	±0.2	–	1.97	3.94	5.91	1.97

Available standard materials [3]

Belt		Pin		Nominal belt pull, straight		Weight		Width deviation	Temperature		Certificates[2]		
Material	Color	Material	Color	[N/mm]	[lb/ft]	[kg/m²]	[lb/ft²]	[%]	[°C]	[°F]	FDA	EU	MHLW
PE	WT	PE	WT	13	891	9.6	1.97	-0.65	-70/65	-94/149	●	●	●
PE	LB	PE	LB	13	891	9.6	1.97	-0.65	-70/65	-94/149	●	●	●
POM	LB	PBT	LB	30	2056	13.7	2.81	-0.65	-45/90	-49/194	●	●	●
Mold to order belts													
PP		PP		18	1233	8.4	1.72	0.0	5/100	41/212			

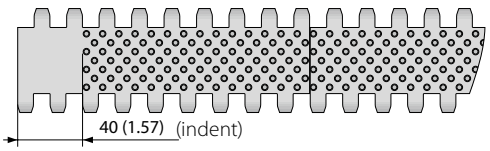

Also available with molded indent 40 mm (1.57 in)

Mold to width available in: 100 mm (3.94 in), 200 mm (7.87 in), 400 mm (15.75 in)

LB (Light blue), WT (White)

All measurements and tolerances apply at 21 °C; for temperature deviations please see Prolink manual chapter 4.4 "Temperature influence".
All imperial dimensions (inches) are rounded off.

[1] Flex radii: r1 = side flex, r2 = front flex on roller, r3 = back flex on load bearing roller, r4 = back flex on Hold Down shoe, r5 = back flex on roller

[2] Complies with FDA 21 CFR | Complies with (EU) 10/2011 and (EC) 1935/2004 regulations regarding the raw materials used and the migration thresholds | Complies with Japanese MHLW Notification 370

● = available | – = not available | empty cells = not tested

[3] More materials and colors on request

S6.1-0 CTP | 0 % Opening | Cone top (pointed studs)

Closed surface and pointed studs | Cone top surface pattern for superior grip | Easy-to-clean

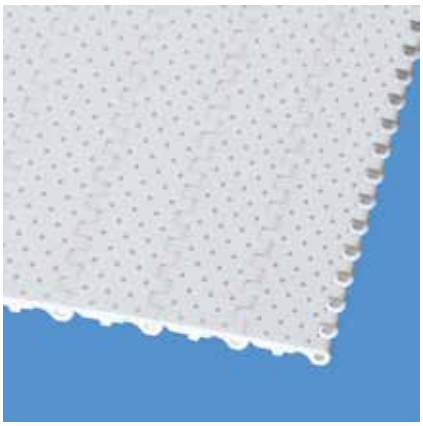

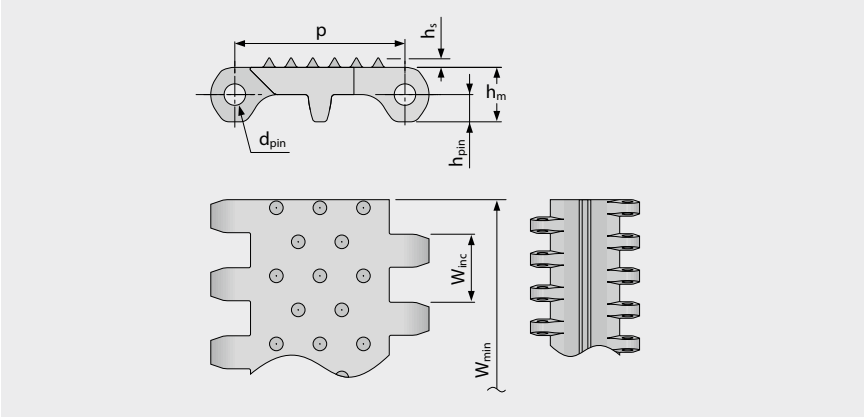

Belt dimensions

	p	d_{pin}	h_m	h_{pin}	h_s	W_{min}	W_{inc}	W_{tol}	Minimum flex radii[1]				
	Pitch	Pin Ø	Thickness	Pin position	Height	Width min.	Width Increment	Width tolerance [%]	r1 C_c x W_B	r2	r3	r4	r5
mm	50.0	6.0	16.0	8.0	2.8	40.0	20.0	±0.2	–	50.0	100.0	150.0	50.0
inch	1.97	0.24	0.63	0.31	0.11	1.57	0.79	±0.2	–	1.97	3.94	5.91	1.97

Available standard materials [3]

Belt		Pin		Nominal belt pull, straight		Weight		Width deviation	Temperature		Certificates[2]		
Material	Color	Material	Color	[N/mm]	[lb/ft]	[kg/m²]	[lb/ft²]	[%]	[°C]	[°F]	FDA	EU	MHLW
POM	WT	PBT	UC	30	2056	13.5	2.77	-0.65	-45/90	-49/194	●	●	●
Mold to order belts													
PE		PE		13	891	9.5	1.95	-0.65	-70/65	-94/149			

Mold to width available in: 400 mm (15.75 in)

UC (Uncolored), WT (White)

All measurements and tolerances apply at 21 °C; for temperature deviations please see Prolink manual chapter 4.4 "Temperature influence".
All imperial dimensions (inches) are rounded off.

[1] Flex radii: r1 = side flex, r2 = front flex on roller, r3 = back flex on load bearing roller, r4 = back flex on Hold Down shoe, r5 = back flex on roller

[2] Complies with FDA 21 CFR | Complies with (EU) 10/2011 and (EC) 1935/2004 regulations regarding the raw materials used and the migration thresholds | Complies with Japanese MHLW Notification 370

● = available | – = not available | empty cells = not tested

[3] More materials and colors on request

S6.1-0 FRT1 | 0 % Opening | Friction top (Design 1)

Closed surface with flat integrated friction pads (FRT1) for high grip

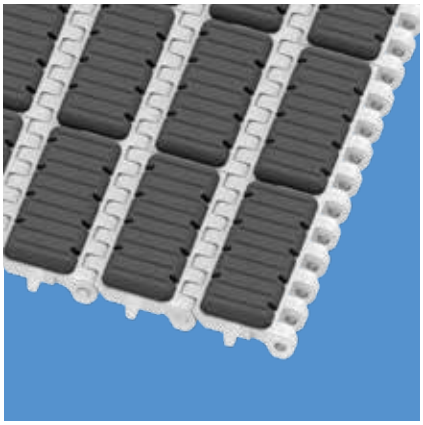

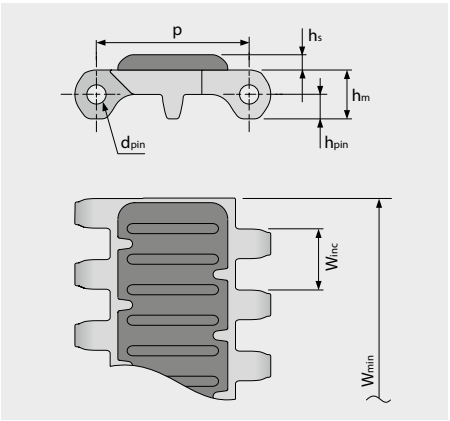

Variant specific dimensions [mm (in)]

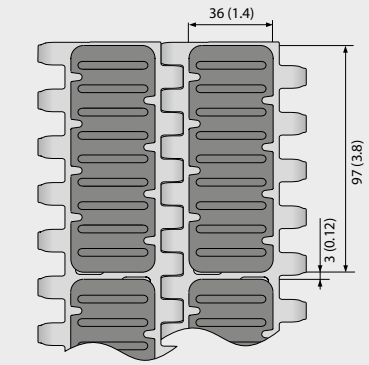

Belt dimensions

	p	d_{pin}	h_m	h_{pin}	h_s	W_{min}	W_{inc}	W_{tol}	Minimum flex radii[1]				
	Pitch	Pin Ø	Thickness	Pin position	Height	Width min.	Width Increment	Width tolerance [%]	r1 C_c x W_B	r2	r3	r4	r5
mm	50.0	6.0	16.0	8.0	0.0	40.0	20.0	±0.2	–	50.0	100.0	150.0	50.0
inch	1.97	0.24	0.63	0.31	0.0	1.57	0.79	±0.2	–	1.97	3.94	5.91	1.97

Mold to order belts [3]

Belt		Pin		Rubber		Nominal belt pull, straight		Weight		Width deviation	Temperature		Certificates[2]		
Material	Color	Material	Color	Material	Color	[N/mm]	[lb/ft]	[kg/m²]	[lb/ft²]	[%]	[°C]	[°F]	FDA	EU	MHLW
POM	WT	PBT	UC	R11	AT	30	2056	14.6	2.99	-0.5	-45/65	-49/149			

Mold to width available in: 200 mm (7.87 in)

■ AT (Anthracite), □ UC (Uncolored), □ WT (White)

All measurements and tolerances apply at 21 °C; for temperature deviations please see Prolink manual chapter 4.4 "Temperature influence".
All imperial dimensions (inches) are rounded off.

[1] Flex radii: r1 = side flex, r2 = front flex on roller, r3 = back flex on load bearing roller, r4 = back flex on Hold Down shoe, r5 = back flex on roller

[2] Complies with FDA 21 CFR | Complies with (EU) 10/2011 and (EC) 1935/2004 regulations regarding the raw materials used and the migration thresholds | Complies with Japanese MHLW Notification 370

● = available | – = not available | empty cells = not tested

[3] More materials and colors on request

S6.1-21 FLT | 21 % Opening | Flat top

Open area (21 %) for excellent air circulation and drainage | 72 % contact area (Largest opening: 1.9 x 11 mm/0.07 x 0.43 in) | Smooth surface | Easy-to-clean

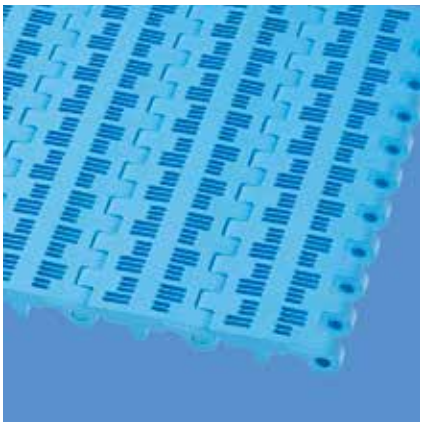

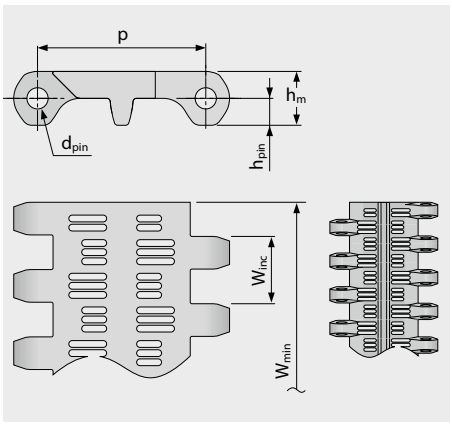

Variant specific dimensions [mm (in)]

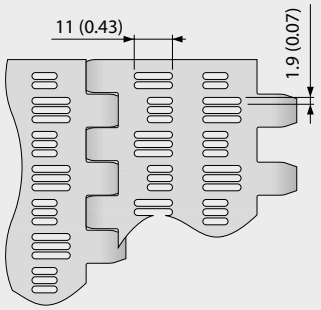

Belt dimensions

	p	d_{pin}	h_m	h_{pin}	h_s	W_{min}	W_{inc}	W_{tol}	Minimum flex radii[1]				
	Pitch	Pin Ø	Thickness	Pin position	Height	Width min.	Width Increment	Width tolerance [%]	r1 C_c x W_B	r2	r3	r4	r5
mm	50.0	6.0	16.0	8.0	0.0	40.0	20.0	±0.2	–	50.0	100.0	150.0	50.0
inch	1.97	0.24	0.63	0.31	0.0	1.57	0.79	±0.2	–	1.97	3.94	5.91	1.97

Available standard materials [3]

Belt		Pin		Nominal belt pull, straight		Weight		Width deviation	Temperature		Certificates[2]		
Material	Color	Material	Color	[N/mm]	[lb/ft]	[kg/m²]	[lb/ft²]	[%]	[°C]	[°F]	FDA	EU	MHLW
PE	LB	PE	LB	13	891	7.8	1.6	-0.5	-70/65	-94/149	●	●	●
POM	WT	PBT	UC	30	2056	10.8	2.21	-0.5	-45/90	-49/194	●	●	●
POM	LB	PBT	LB	30	2056	10.8	2.21	-0.5	-45/90	-49/194	●	●	●
PP	WT	PP	WT	18	1233	6.7	1.37	0.0	5/100	41/212	●	●	●
PP	LB	PP	LB	18	1233	6.7	1.37	0.0	5/100	41/212	●	●	●
Mold to order belts													
PE	WT	PE	WT	13	891	7.8	1.6	-0.5	-70/65	-94/149	●	●	●
PK	BL/WT	PK	BL	22	1507	9.7	1.99	-0.15	-45/120	-49/248	●	●	●

Mold to width available in: 100 mm (3.94 in), 200 mm (7.87 in)

LB (Light blue), UC (Uncolored), WT (White)

All measurements and tolerances apply at 21 °C; for temperature deviations please see Prolink manual chapter 4.4 "Temperature influence".
All imperial dimensions (inches) are rounded off.

[1] Flex radii: r1 = side flex, r2 = front flex on roller, r3 = back flex on load bearing roller, r4 = back flex on Hold Down shoe, r5 = back flex on roller

[2] Complies with FDA 21 CFR | Complies with (EU) 10/2011 and (EC) 1935/2004 regulations regarding the raw materials used and the migration thresholds | Complies with Japanese MHLW Notification 370

● = available | – = not available | empty cells = not tested

[3] More materials and colors on request

Straight running belt | Pitch 50 mm (1.97 in)

S6.1-23 FLT | 23 % Opening | Flat top

Open area (23 %) for excellent air circulation and drainage | 71 % contact area | Smooth surface | Easy-to-clean



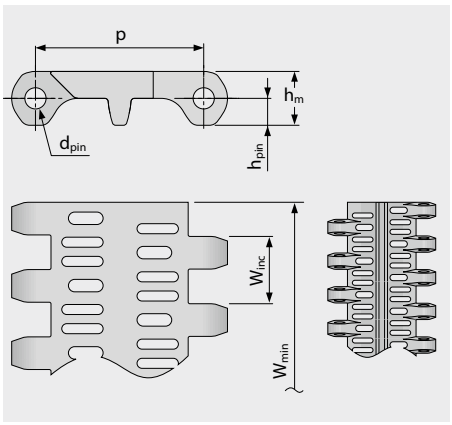

Variant specific dimensions [mm (in)]

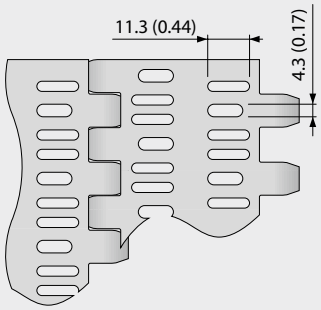

Belt dimensions

	p	d_{pin}	h_m	h_{pin}	h_s	W_{min}	W_{inc}	W_{tol}	Minimum flex radii[1]				
	Pitch	Pin Ø	Thickness	Pin position	Height	Width min.	Width Increment	Width tolerance [%]	r1 C_c x W_B	r2	r3	r4	r5
mm	50.0	6.0	16.0	8.0	0.0	40.0	20.0	±0.2	–	50.0	100.0	150.0	50.0
inch	1.97	0.24	0.63	0.31	0.0	1.57	0.79	±0.2	–	1.97	3.94	5.91	1.97

Available standard materials [3]

Belt		Pin		Nominal belt pull, straight		Weight		Width deviation	Temperature		Certificates[2]		
Material	Color	Material	Color	[N/mm]	[lb/ft]	[kg/m²]	[lb/ft²]	[%]	[°C]	[°F]	FDA	EU	MHLW
PE	WT	PE	WT	13	891	8.2	1.68	-0.5	-70/65	-94/149	●	●	●
PE	LB	PE	LB	13	891	8.2	1.68	-0.5	-70/65	-94/149	●	●	●
POM	WT	PBT	UC	30	2056	11.3	2.31	-0.5	-45/90	-49/194	●	●	●
POM	LB	PBT	LB	30	2056	11.3	2.31	-0.5	-45/90	-49/194	●	●	●
PP	WT	PP	WT	18	1233	7.0	1.43	0.0	5/100	41/212	●	●	●
PP	LB	PP	LB	18	1233	7.0	1.43	0.0	5/100	41/212	●	●	●
Mold to order belts													
PE-I	UC	PE	WT	13	891	8.2	1.68	-0.5	-70/65	-94/149	●	●	●
PE-MD	BL	POM-MD	BL	13	891	8.9	1.82	-0.5	-70/65	-94/149	●	●	●
PK	BL/WT	PK	BL	22	1507	10.1	2.07	-0.15	-45/120	-49/248	●	●	●
POM-CR		PBT		30	2056	11.3	2.31	-0.5	-45/90	-49/194			

Mold to width available in: 100 mm (3.94 in), 200 mm (7.87 in), 400 mm (15.75 in)

BL (Blue), LB (Light blue), UC (Uncolored), WT (White)

All measurements and tolerances apply at 21 °C; for temperature deviations please see Prolink manual chapter 4.4 "Temperature influence".
All imperial dimensions (inches) are rounded off.

[1] Flex radii: r1 = side flex, r2 = front flex on roller, r3 = back flex on load bearing roller, r4 = back flex on Hold Down shoe, r5 = back flex on roller

[2] Complies with FDA 21 CFR | Complies with (EU) 10/2011 and (EC) 1935/2004 regulations regarding the raw materials used and the migration thresholds | Complies with Japanese MHLW Notification 370
● = available | – = not available | empty cells = not tested

[3] More materials and colors on request

S6.1-36 FLT | 36 % Opening | Flat top

Open area (36 %) for excellent air circulation and drainage | 35 % contact area (Largest opening: Ø = 12 mm/0.47 in) | Smooth surface | Easy-to-clean

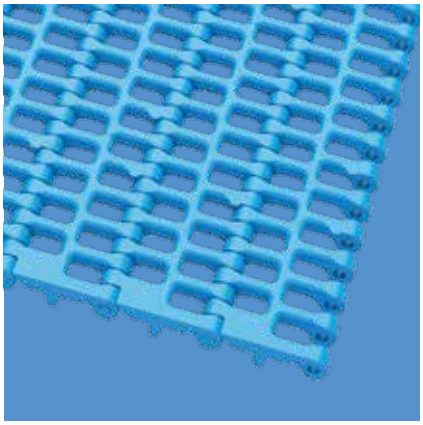

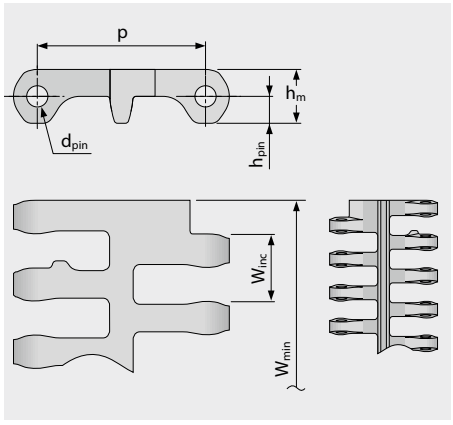

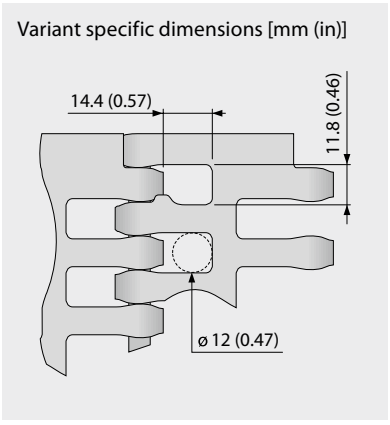

Belt dimensions

	p	d_{pin}	h_m	h_{pin}	h_s	W_{min}	W_{inc}	W_{tol}	Minimum flex radii[1]				
	Pitch	Pin Ø	Thickness	Pin position	Height	Width min.	Width Increment	Width tolerance [%]	r1 C_c x W_B	r2	r3	r4	r5
mm	50.0	6.0	16.0	8.0	0.0	100.0	20.0	±0.2	–	50.0	100.0	150.0	50.0
inch	1.97	0.24	0.63	0.31	0.0	3.94	0.79	±0.2	–	1.97	3.94	5.91	1.97

Available standard materials [3]

Belt		Pin		Nominal belt pull, straight		Weight		Width deviation	Temperature		Certificates[2]		
Material	Color	Material	Color	[N/mm]	[lb/ft]	[kg/m²]	[lb/ft²]	[%]	[°C]	[°F]	FDA	EU	MHLW
PE	WT	PE	WT	13	891	6.2	1.27	-0.5	-70/65	-94/149	●	●	●
PE	LB	PE	LB	13	891	6.2	1.27	-0.5	-70/65	-94/149	●	●	●
POM	WT	PBT	UC	30	2056	9.0	1.84	-0.5	-45/90	-49/194	●	●	●
POM	LB	PBT	LB	30	2056	9.0	1.84	-0.5	-45/90	-49/194	●	●	●
PP	WT	PP	WT	18	1233	5.9	1.21	0.0	5/100	41/212	●	●	●
PP	LB	PP	LB	18	1233	5.9	1.21	0.0	5/100	41/212	●	●	●
Mold to order belts													
PE-MD	BL	POM-MD	BL	13	891	6.7	1.37	-0.5	-70/65	-94/149	●	●	●
PK	BL/WT	PK	BL	22	1507	8.4	1.72	-0.15	-45/120	-49/248	●	●	●
POM-MD	BL	POM-MD	BL	30	2056	9.2	1.88	-0.5	-45/90	-49/194	●	●	●
PP-MD	BL	PP-MD	BL	18	1233	6.4	1.31	0.0	5/100	41/212	●	●	●

Attention! Due to the very large surface openings, personnel must be instructed not to place their fingers in or on this belt.

BL (Blue), LB (Light blue), UC (Uncolored), WT (White)

All measurements and tolerances apply at 21 °C; for temperature deviations please see Prolink manual chapter 4.4 "Temperature influence".
All imperial dimensions (inches) are rounded off.

[1] Flex radii: r1 = side flex, r2 = front flex on roller, r3 = back flex on load bearing roller, r4 = back flex on Hold Down shoe, r5 = back flex on roller

[2] Complies with FDA 21 CFR | Complies with (EU) 10/2011 and (EC) 1935/2004 regulations regarding the raw materials used and the migration thresholds | Complies with Japanese MHLW Notification 370
● = available | – = not available | empty cells = not tested

[3] More materials and colors on request

S6.1-0 FLT PSP | ProSnap

Quick-Release for easy, quick and toolless opening and closing of the belt | One pin solution for entire belt width

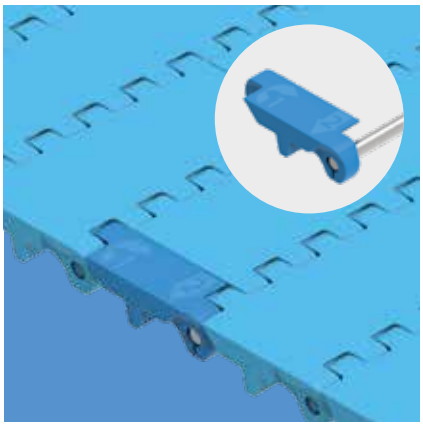

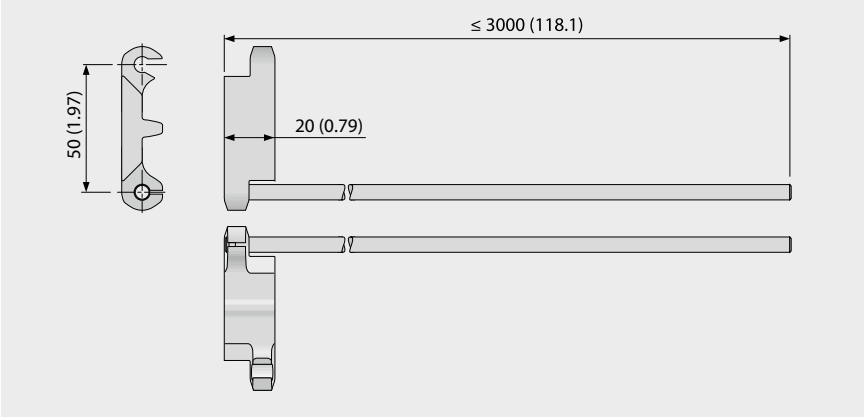

Basic data

Module		Pin	
Material	Color	Material	Length [mm (in)]
POM	BL	SS	≤ 3000 (118)
Mold to order			
POM-MD	BL	SS	≤ 3000 (118)

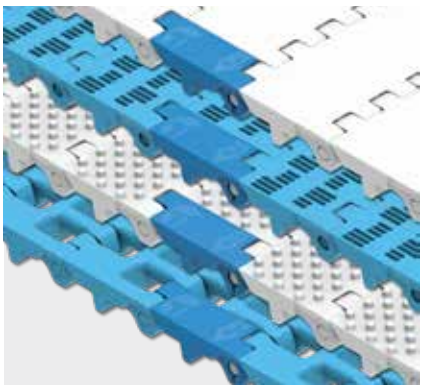

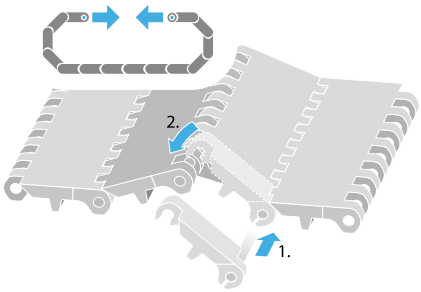

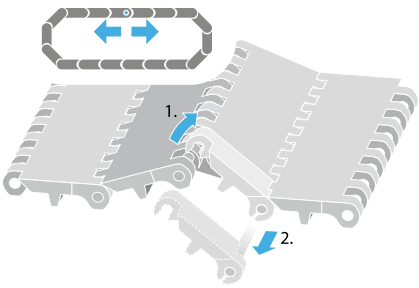

BL (Blue)

All measurements and tolerances apply at 21 °C; for temperature deviations please see Prolink manual chapter 4.4 "Temperature influence".
All imperial dimensions (inches) are rounded off.
Note: Use of accessory in a belt may impact on the minimum design radii. Please see chapter 6.3 for further information.

S6.1 SPR | Sprockets

Special easy-to-clean sprocket with enhanced tooth engagement for excellent force transmission



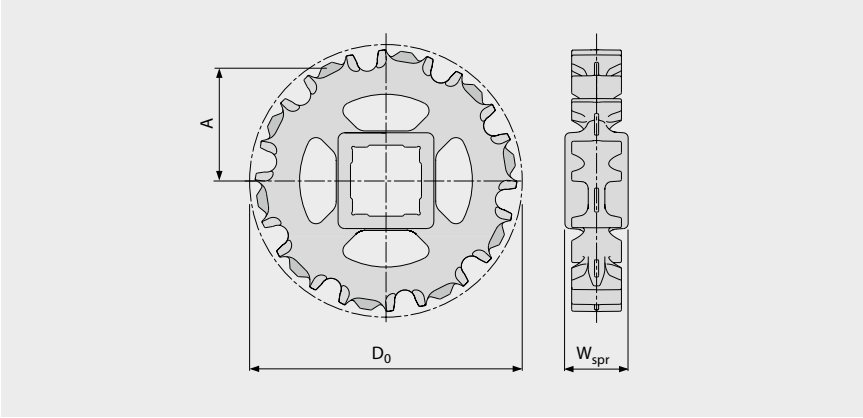

Main dimensions

Sprocket size (Number of teeth)		Z6	Z8 V2	Z10 V2	Z12 V2	Z16 V2
W_{spr}	mm	38.0	38.0	38.0	38.0	38.0
	inch	1.5	1.5	1.5	1.5	1.5
D_0	mm	101.6	133.2	164.2	195.5	257.8
	inch	4.00	5.24	6.46	7.70	10.15
A_{max}	mm	41.6	57.9	73.7	89.5	120.7
	inch	1.64	2.28	2.9	3.52	4.75
A_{min}	mm	36.0	53.5	70.1	86.5	118.4
	inch	1.42	2.11	2.76	3.40	4.66

Shaft bores (● = Round, ■ = Square)

30	mm	●	●	●		
40	mm	■	■	■	■	■
60	mm			■	■	■
1	inch	●	●	●		
1.25	inch		●	●		
1.44	inch			●		
1.5	inch	■	■	■	● / ■	■
2	inch			■		■
2.5	inch			■	■	■

Standard material: PA, Color: LG
Mold to order: Material: PK, Color: UC / Material: PP, Color: WT / Material: TPC1, Color: UC

LG (Light gray), UC (Uncolored), WT (White)

All measurements and tolerances apply at 21 °C.
All imperial dimensions (inches) are rounded off.
For detailed sprocket and shaft dimensions see appendix 6.3
Number of sprockets (sprocket spacing distance) see chapter 3.2

S6.1-0 FLT PMU/S6.1-0 FLT PMU I40

Flat top surface for dry products





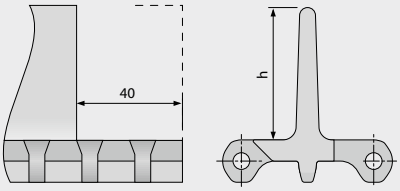

Basic data

Material	Color	Height (h)		
		50 mm 2 inch	100 mm 4 inch	150 mm 6 inch
PE	LB/WT	●/▲	●/▲	●
POM-CR	LB		●	
POM	LB/WT	●/▲	●/▲	●/▲
POM-MD	BL	mold to order	●	●
PP	LB/WT	●/▲	●/▲	●
PP-MD	BL		●	

● = no indent, ▲ = with indent 40 mm

Molded width: 200 mm (7.9 in)

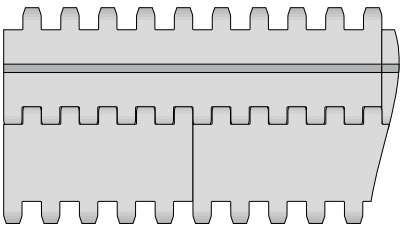

Standard configuration S6.1-0 FLT PMU

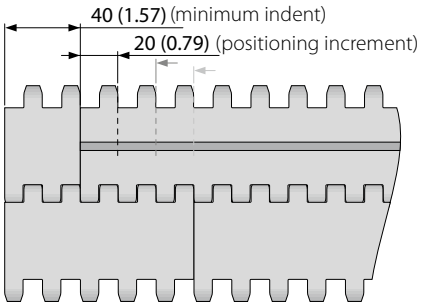

Indent configuration S6.1-0 FLT PMU

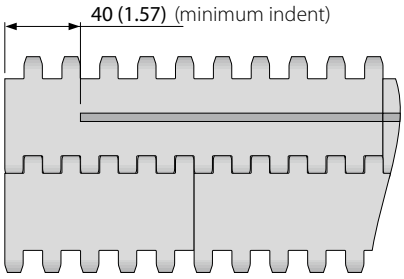

Standard configuration S6.1-0 FLT PMU I40

BL (Blue), LB (Light blue), WT (White)

All measurements and tolerances apply at 21 °C; for temperature deviations please see Prolink manual chapter 4.4 "Temperature influence".
All imperial dimensions (inches) are rounded off.
Note: Use of accessory in a belt may impact on the minimum design radii. Please see chapter 6.3 for further information.

S6.1-0 NCL PMU

No cling surface with nub top base to improve release of wet and sticky products



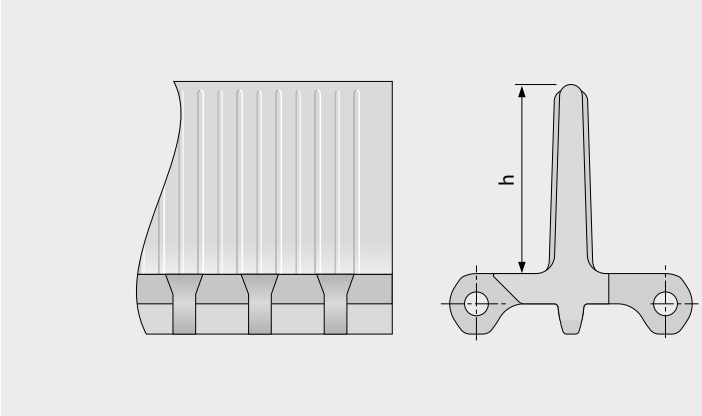

Basic data

Material	Color	Height (h)
		100 mm 4 inch
PE	LB	●
PE	WT	●
POM	LB	●

Molded width: 200 mm (7.9 in)

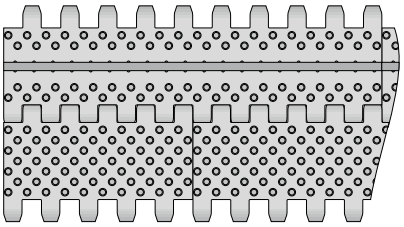

Standard configuration S6.1-0 NCL PMU

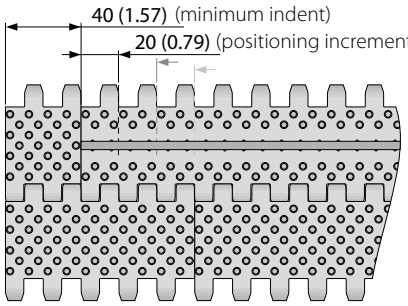

Indent configuration S6.1-0 NCL PMU

LB (Light blue), WT (White)

All measurements and tolerances apply at 21 °C; for temperature deviations please see Prolink manual chapter 4.4 "Temperature influence".
All imperial dimensions (inches) are rounded off.
Note: Use of accessory in a belt may impact on the minimum design radii. Please see chapter 6.3 for further information.

S6.1-23 NCL PMU

No cling surface with open area base (23 %) to improve release of wet and sticky products



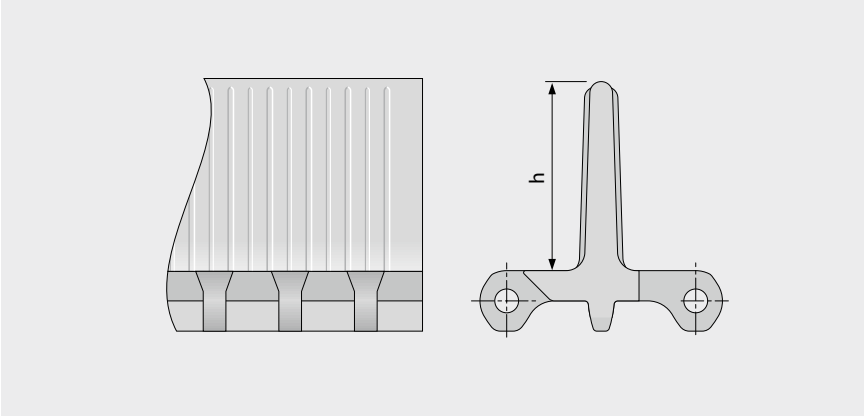

Basic data

Material	Color	Height (h)
		100 mm 4 inch
PE	LB	●
PE	WT	●
POM	LB	●
PP	LB	●
PP	WT	●

Molded width: 200 mm (7.9 in)

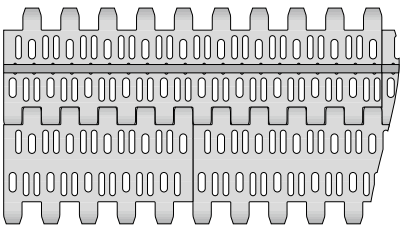

Standard configuration S6.1-23 NCL PMU

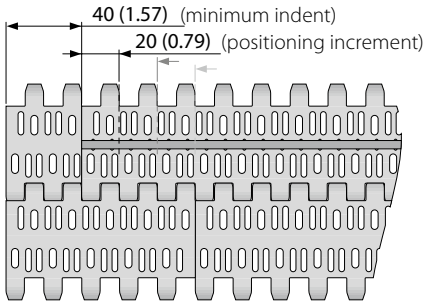

Indent configuration S6.1-23 NCL PMU

LB (Light blue), WT (White)

All measurements and tolerances apply at 21 °C; for temperature deviations please see Prolink manual chapter 4.4 "Temperature influence".
All imperial dimensions (inches) are rounded off.
Note: Use of accessory in a belt may impact on the minimum design radii. Please see chapter 6.3 for further information.

S6.1-0 FLT PSU-0

Scooped profiles with a closed, flat top surface for steep incline conveyors

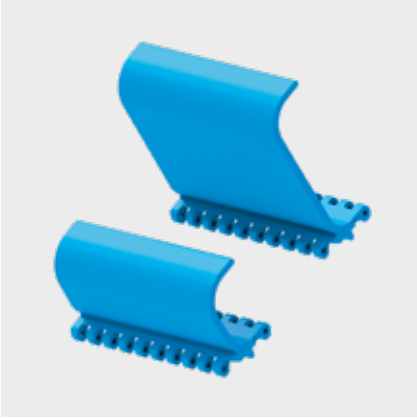



Basic data

Material	Color	Height (h)		
		76 mm 3 inch	102 mm 4 inch	152 mm 6 inch
PE	LB	●	●	●
PE	WT	●	●	●
POM	LB	●	●	●
POM	WT	●	●	●
PP	LB	●	●	●
PP	WT	●	●	●
PP-MD	BL		●	●

Molded width: 200 mm (7.9 in)

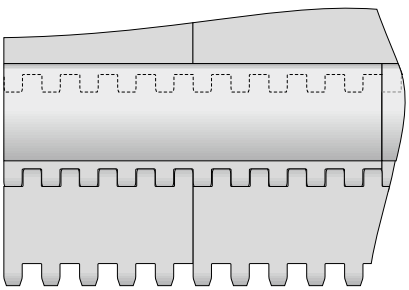

Standard configuration S6.1-0 FLT PSU-0

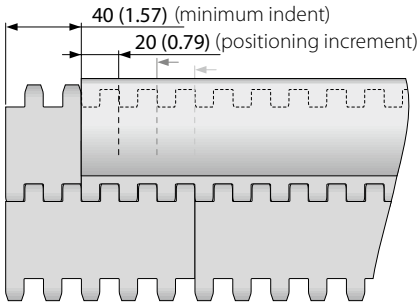

Indent configuration S6.1-0 FLT PSU-0

BL (Blue), LB (Light blue), WT (White)

All measurements and tolerances apply at 21 °C; for temperature deviations please see Prolink manual chapter 4.4 "Temperature influence".
All imperial dimensions (inches) are rounded off.
Note: Use of accessory in a belt may impact on the minimum design radii. Please see chapter 6.3 for further information.

S6.1-0 FLT PSU-16

Scooped profiles with 16 % open area and a flat top surface allowing product drainage when conveying up steep inclines



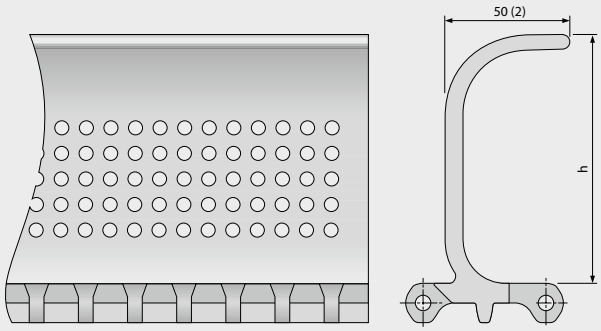

Basic data

Material	Color	Height (h)	
		102 mm 4 inch	152 mm 6 inch
PE	LB	●	●
PE	WT	mold to order	mold to order
POM	LB	●	●
POM	WT	mold to order	mold to order
PP	LB	●	●
PP	WT	●	mold to order

Molded width: 200 mm (7.9 in)

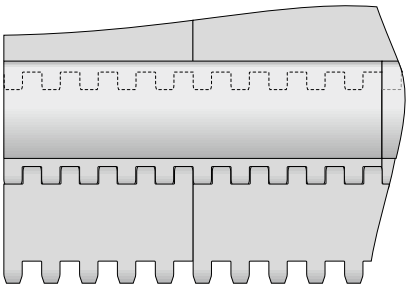

Standard configuration S6.1-0 FLT PSU-16

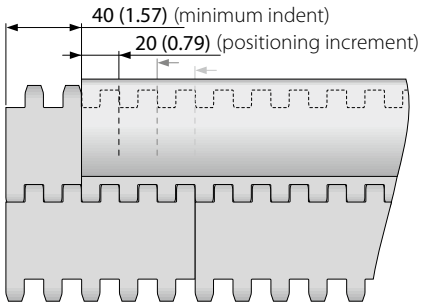

Indent configuration S6.1-0 FLT PSU-16

LB (Light blue), WT (White)

All measurements and tolerances apply at 21 °C; for temperature deviations please see Prolink manual chapter 4.4 "Temperature influence".
All imperial dimensions (inches) are rounded off.
Note: Use of accessory in a belt may impact on the minimum design radii. Please see chapter 6.3 for further information.

S6.1-0 FLT BPU

Bucket Profiles for contained conveying of bulk products up steep inclines



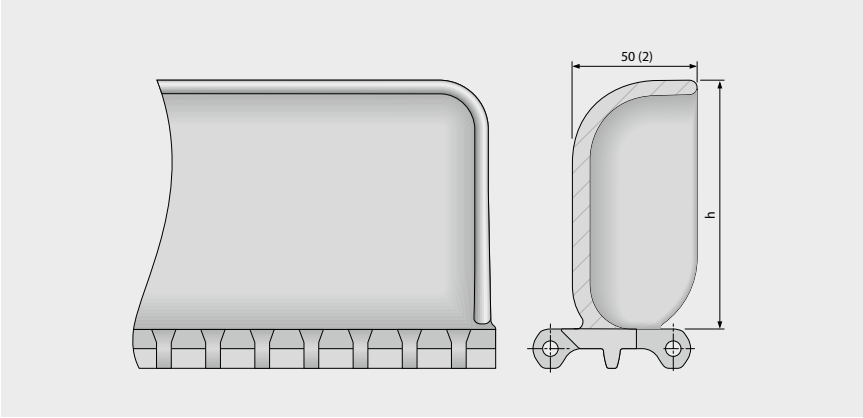

Basic data

Material	Color	Height (h)	
		102 mm 4 inch	152 mm 6 inch
PE	LB	●	mold to order
PE	WT	●	mold to order
POM	LB	●	mold to order
POM	WT	●	mold to order
PP	LB	●	●
PP	WT	●	●

Molded width: 200 mm (7.9 in)

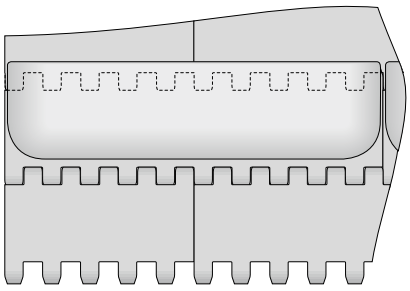

Standard configuration S6.1-0 FLT BPU

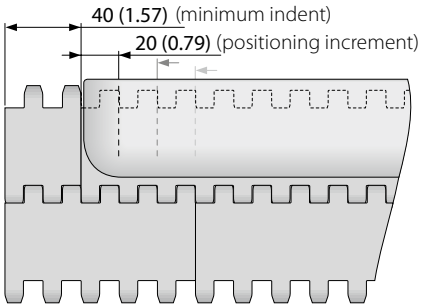

Indent configuration S6.1-0 FLT BPU

LB (Light blue), WT (White)

All measurements and tolerances apply at 21 °C; for temperature deviations please see Prolink manual chapter 4.4 "Temperature influence".
All imperial dimensions (inches) are rounded off.
Note: Use of accessory in a belt may impact on the minimum design radii. Please see chapter 6.3 for further information.

S6.1 SG | Side guards

For retention of bulk products (only for modules h_s = 0 mm/in)

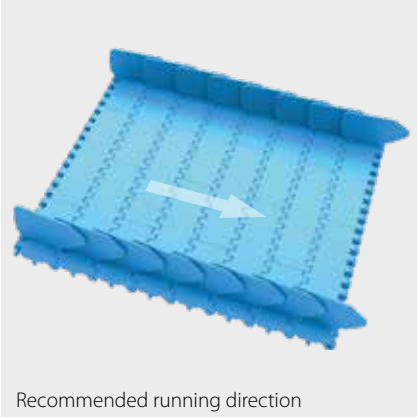
Recommended running direction



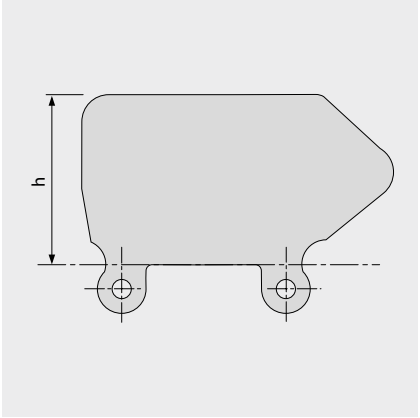

Basic data

Material	Color	Height (h)			
		25 mm 1 inch	50 mm 2 inch	75 mm 3 inch	100 mm 4 inch
PE	LB	●	●	●	●
PE	WT	●	●	●	●
PE-MD	BL		mold to order	●	●
PP	LB	mold to order	●	●	●
PP	WT	●	●	●	●

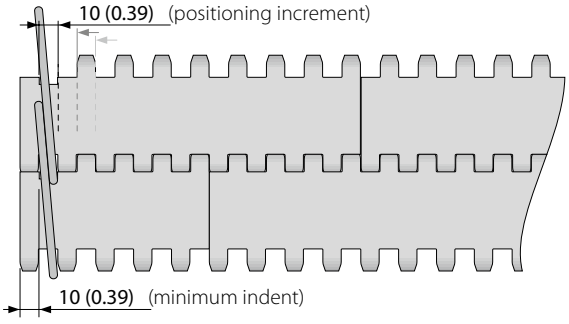

BL (Blue), LB (Light blue), WT (White)

All measurements and tolerances apply at 21 °C; for temperature deviations please see Prolink manual chapter 4.4 "Temperature influence".
All imperial dimensions (inches) are rounded off.
Note: Use of accessory in a belt may impact on the minimum design radii. Please see chapter 6.3 for further information.

S6.1 HDT | Hold Down Tabs

Used on wider belts to prevent lift an swan neck conveyors | To improve strength, stability and cleanability they are moulded on a narrow module



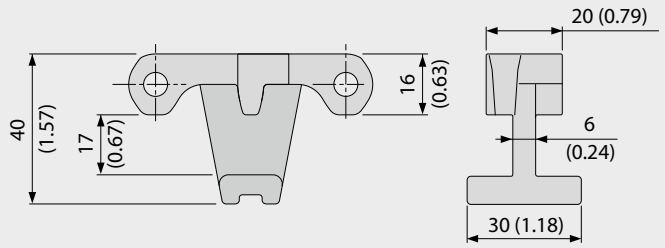

Basic data

Material	Color
POM	LB
	WT

Using Hold Down Tabs results in constrains with regards to sprocket and shaft size to ensure sufficient clearance to the shaft (see also chapter 3.3 hold down tabs).

Example

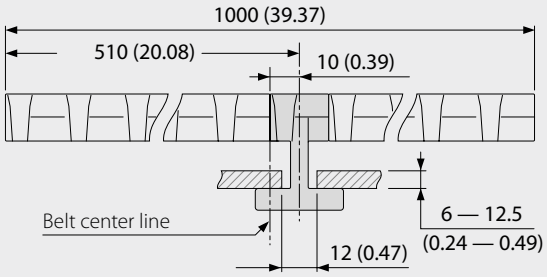

Sprocket options using HDT

Sprocket size (Number of teeth)	Maximum bore round		Maximum bore square	
	[mm]	[inch]	[mm]	[inch]
Z6	20	0.75	15	0.5
Z8	50	1.75	40	1.5
Z10	80	3.0	60	2.5
Z12	110	4.25	85	3.25
Z16	170	6.5	130	5.25

LB (Light blue), WT (White)

All measurements and tolerances apply at 21 °C; for temperature deviations please see Prolink manual chapter 4.4 "Temperature influence".
All imperial dimensions (inches) are rounded off.
Note: Use of accessory in a belt may impact on the minimum design radii. Please see chapter 6.3 for further information.

S6.1 PRR | Pin Retained Rollers

For applications where low back pressure accumulation or product separation is required

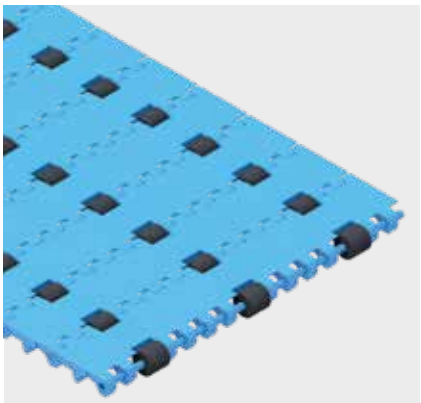

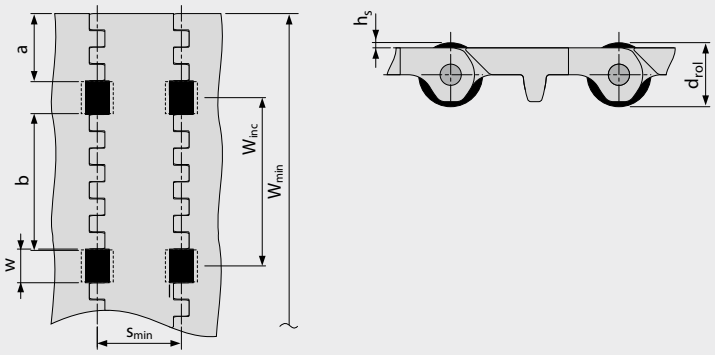

- For low back pressure wearstrips are to be positioned between the rollers
- For product separation the wear-strips are to be positioned below the rollers
- For all materials and surfaces
- Rollers available in POM BK

Dimensions

w	20 mm (0.79 in)	Roller cut out width (roller width 19 mm (0.75 in))
h_s	2.0 mm (0.08 in)	Height of rollers above surface
d_{rol}	20 mm (0.79 in)	Roller diameter
a	40 mm (1.6 in)	Minimum indent
b	80 mm (3.15 in)	Standard distance between rollers across belt width
s	n x s_{min}	Roller spacing in travel direction (standard: n = 1)
s_{min}	50 mm (2.0 in)	Min. roller spacing in travel direction
W_{inc}	100 mm (3.9 in)	Width increment
W_{min}	200 mm (7.9 in)	Min. belt width
W_B		Belt width
n_{rol}		Number of rollers across belt width

Allowable belt pull

To determine admissible belt pull calculate effective belt width $W_{B,ef}$ by

$W_{B,ef} = W_B - (w \times n_{rol})$

Example: W_B = 400 mm (15.75 in); w = 20 mm (0.79 in); n_{rol} = 4

$W_{B,ef}$ = 400 – (20 x 4) = 320 mm

$W_{B,ef}$ = 15.75 – (0.79 x 4) = 12.6 in

Note: Sprocket must not be placed inline with rollers. Deviation in roller spacing possible, please get in contact to customer service. Coefficient of friction between belt and conveyed product in accumulation mode μ_{acc} = 0.04, I.e. the accumulation pressure is approx. 4 % of the weight of the backed up product.

All measurements and tolerances apply at 21 °C; for temperature deviations please see Prolink manual chapter 4.4 “Temperature influence“.
All imperial dimensions (inches) are rounded off.
Note: Use of accessory in a belt may impact on the minimum design radii. Please see chapter 6.3 for further information.

siegling prolink
modular belts

SERIES 7

Straight running belts
Pitch 40 mm (1.57 in)

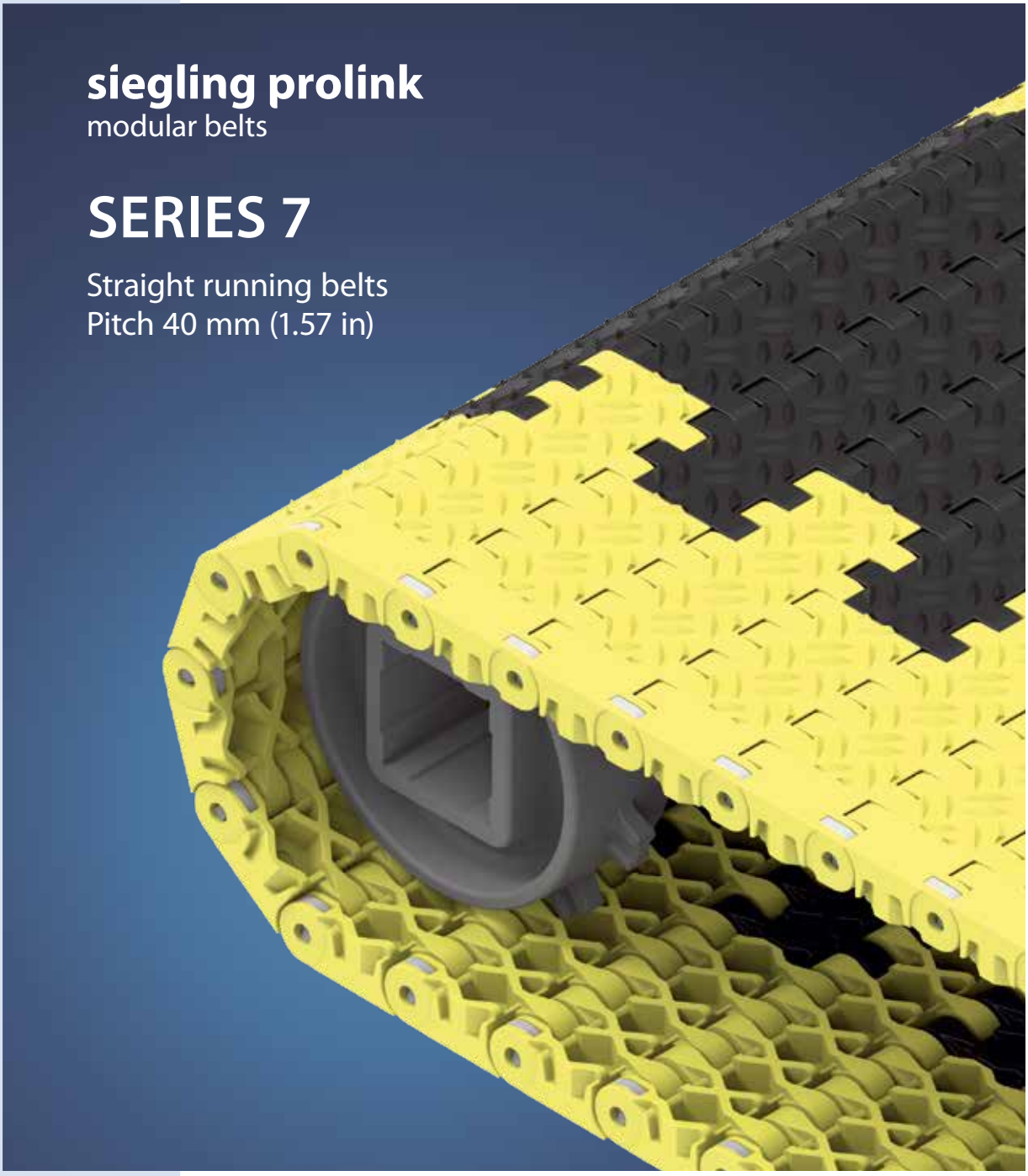

SERIES 7 | **OVERVIEW**

Straight running belts | Pitch 40 mm (1.57 in)

Belts for heavy-duty non-food applications

Side view scale 1:1

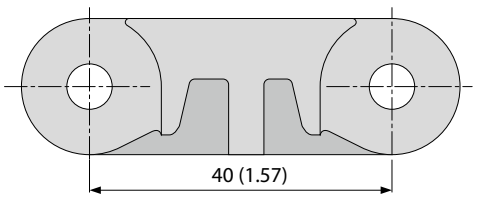

Design characteristics

- Closed-hinge design provides high belt pull capacity
- Small-pitch relative to belt thickness makes belt suitable for compact, heavily loaded conveyors
- Robust design with large surface contact area ensures superior wear life
- Closed solid edge
- Flame retardant version available (PXX-HC – in line with DIN EN 13501-1)

Available surface pattern and opening area

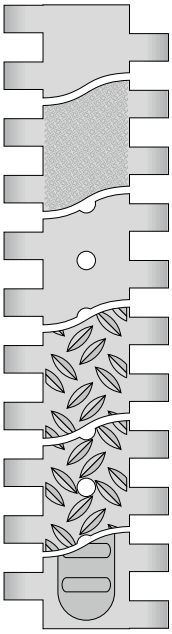

S7-0 FLT
Closed, smooth surface

S7-0 SRS
Closed, slip-resistant surface

S7-6 FLT
Open (6 %), smooth surface

S7-0 NSK
Closed surface with non skid pattern

S7-6 NSK
Open (6 %) surface with non skid pattern

S7-0 FRT1
Closed surface with friction top

Basic data

Pitch	40 mm (1.57 in)
Belt width min.	80 mm (3.15 in) 360 mm (14.2 in) for belts with FRT-surface (side modules only available without FRT-surface)
Width increments	20 mm (0.8 in) FRT-surface on request
Hinge pins	6 mm (0.24 in) made of plastic (PBT) or stainless steel

Sprockets
in different sizes with round or square bore



Wheelstopper
used for securing the position of vehicles on the belt



S7-0 FLT | 0 % Opening | Flat top

Closed, smooth surface | Flat top surface

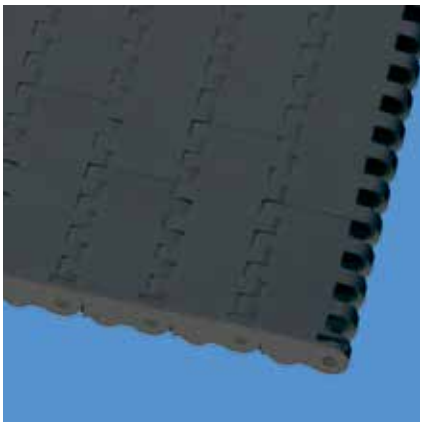

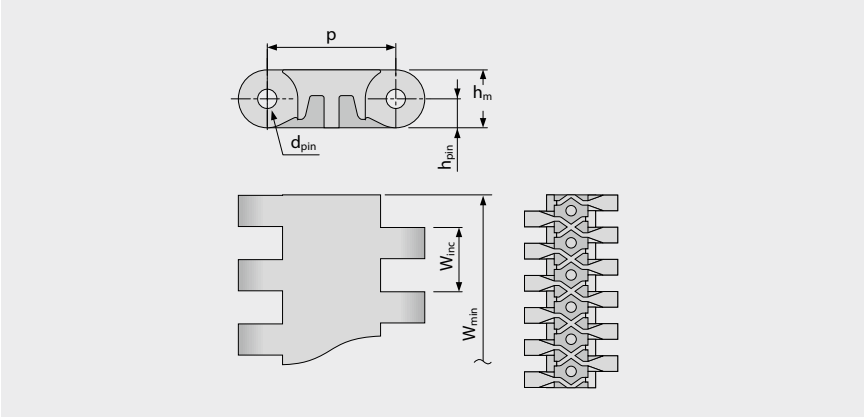

Belt dimensions

	p	d_{pin}	h_m	h_{pin}	h_s	W_{min}	W_{inc}	W_{tol}	Minimum flex radii[1]				
	Pitch	Pin Ø	Thickness	Pin position	Height	Width min.	Width Increment	Width tolerance [%]	r1 C_c x W_B	r2	r3	r4	r5
mm	40.0	6.0	18.0	9.0	0.0	80.0	20.0	±0.2	–	40.0	80.0	120.0	40.0
inch	1.57	0.24	0.71	0.35	0.0	3.15	0.79	±0.2	–	1.57	3.15	4.72	1.57

Available standard materials [3]

Belt		Pin		Nominal belt pull, straight		Weight		Width deviation	Temperature		Certificates[2]
Material	Color	Material	Color	[N/mm]	[lb/ft]	[kg/m²]	[lb/ft²]	[%]	[°C]	[°F]	Flame retardant
POM	AT	PBT	UC	50	3426	18.3	3.75	-0.75	-45/90	-49/194	–
POM	AT	SS		60	4111	22.8	4.67	-0.75	-45/90	-49/194	–
POM	YL	PBT	UC	50	3426	18.3	3.75	-0.75	-45/90	-49/194	–
POM	YL	SS		60	4111	22.8	4.67	-0.75	-45/90	-49/194	–
POM-HC	AT	PBT	UC	50	3426	18.8	3.85	-0.75	-45/90	-49/194	–
POM-HC	AT	SS		60	4111	23.3	4.77	-0.75	-45/90	-49/194	–
Mold to order belts											
PE		PE	UC	18	1233	12.3	2.52	-0.35	-70/65	-94/149	–
PP		PP	WT	30	2056	11.6	2.38	0.0	5/100	41/212	–
PP		SS		30	2056	16.5	3.38	0.0	5/100	41/212	–
PXX-HC	BK	PBT	UC	30	2056	12.8	2.62	-0.13	5/100	41/212	●
PXX-HC	BK	SS		30	2056	17.7	3.63	-0.13	5/100	41/212	●

AT (Anthracite), BK (Black), UC (Uncolored), WT (White), YL (Yellow)

All measurements and tolerances apply at 21 °C; for temperature deviations please see Prolink manual chapter 4.4 "Temperature influence".
All imperial dimensions (inches) are rounded off.

[1] Flex radii: r1 = side flex, r2 = front flex on roller, r3 = back flex on load bearing roller, r4 = back flex on Hold Down shoe, r5 = back flex on roller

[2] Complies with DIN EN 13501-1 Cfl-s1 (and DIN 4102 B1)

● = available | – = not available | empty cells = not tested

[3] More materials and colors on request

S7-0 SRS | 0 % Opening | Slip-resistant

Closed surface | Slip-resistant surface, pleasant to walk and kneel on | Flat top surface

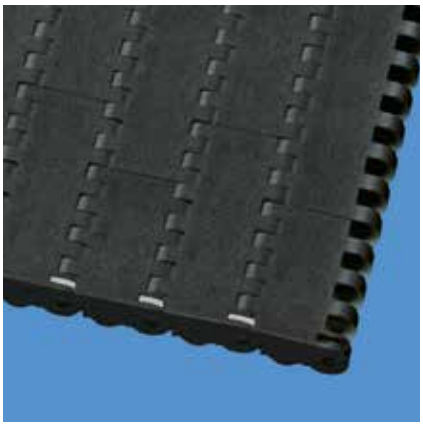

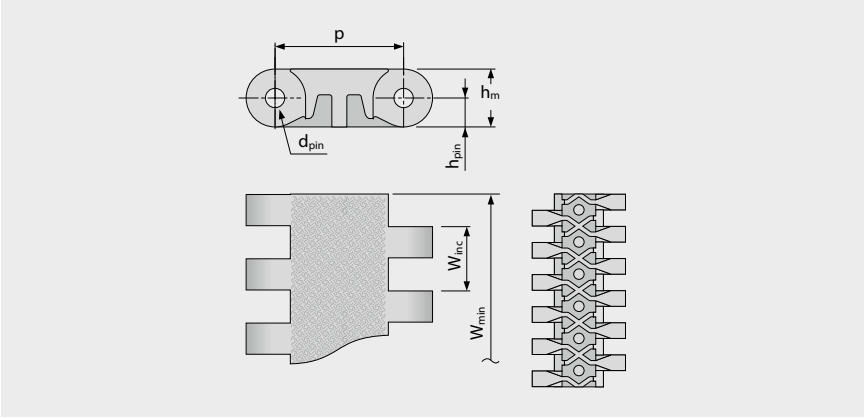

Belt dimensions

	p	d_{pin}	h_m	h_{pin}	h_s	W_{min}	W_{inc}	W_{tol}	Minimum flex radii[1]				
	Pitch	Pin Ø	Thickness	Pin position	Height	Width min.	Width Increment	Width tolerance [%]	r1 C_c x W_B	r2	r3	r4	r5
mm	40.0	6.0	18.0	9.0	0.0	80.0	20.0	±0.2	–	40.0	80.0	120.0	40.0
inch	1.57	0.24	0.71	0.35	0.0	3.15	0.79	±0.2	–	1.57	3.15	4.72	1.57

Available standard materials [3]

Belt		Pin		Nominal belt pull, straight		Weight		Width deviation	Temperature		Certificates[2]
Material	Color	Material	Color	[N/mm]	[lb/ft]	[kg/m²]	[lb/ft²]	[%]	[°C]	[°F]	Flame retardant
POM	AT	PBT	UC	50	3426	18.3	3.75	-0.75	-45/90	-49/194	–
POM	AT	SS		60	4111	22.8	4.67	-0.75	-45/90	-49/194	–
POM	YL	PBT	UC	50	3426	18.3	3.75	-0.75	-45/90	-49/194	–
POM	YL	SS		60	4111	22.8	4.67	-0.75	-45/90	-49/194	–
POM-HC	AT	PBT	UC	50	3426	18.8	3.85	-0.75	-45/90	-49/194	–
POM-HC	AT	SS		60	4111	23.3	4.77	-0.75	-45/90	-49/194	–
PXX-HC	BK	PBT	UC	30	2056	12.8	2.62	-0.13	5/100	41/212	●
PXX-HC	BK	SS		30	2056	17.7	3.63	-0.13	5/100	41/212	●

■ AT (Anthracite), ■ BK (Black), □ UC (Uncolored), ■ YL (Yellow)

All measurements and tolerances apply at 21 °C; for temperature deviations please see Prolink manual chapter 4.4 "Temperature influence".
All imperial dimensions (inches) are rounded off.

[1] Flex radii: r1 = side flex, r2 = front flex on roller, r3 = back flex on load bearing roller, r4 = back flex on Hold Down shoe, r5 = back flex on roller

[2] Complies with DIN EN 13501-1 Cfl-s1 (and DIN 4102 B1)

● = available | – = not available | empty cells = not tested

[3] More materials and colors on request

S7-6 FLT | 6 % Opening | Flat top

Open area (6 %) increases drainage capacity | Smooth surface

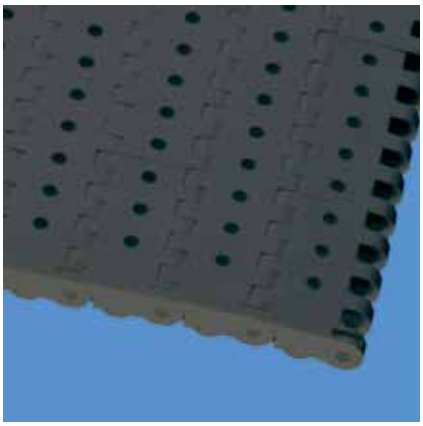

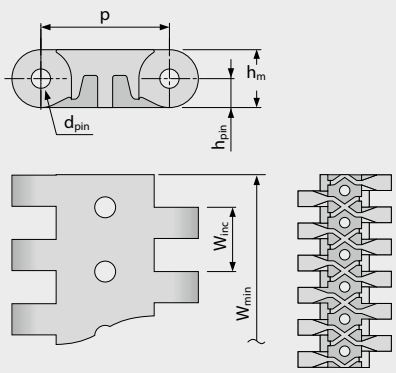

Variant specific dimensions [mm (in)]

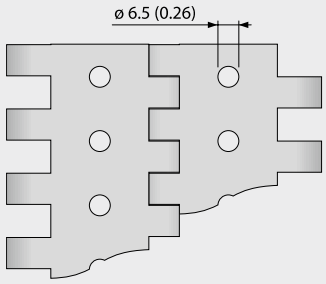

Belt dimensions

	p	d_{pin}	h_m	h_{pin}	h_s	W_{min}	W_{inc}	W_{tol}	Minimum flex radii[1]				
	Pitch	Pin Ø	Thickness	Pin position	Height	Width min.	Width Increment	Width tolerance [%]	r1 C_c x W_B	r2	r3	r4	r5
mm	40.0	6.0	18.0	9.0	0.0	80.0	20.0	±0.2	–	40.0	80.0	120.0	40.0
inch	1.57	0.24	0.71	0.35	0.0	3.15	0.79	±0.2	–	1.57	3.15	4.72	1.57

Available standard materials [3]

Belt		Pin		Nominal belt pull, straight		Weight		Width deviation	Temperature		Certificates[2]
Material	Color	Material	Color	[N/mm]	[lb/ft]	[kg/m²]	[lb/ft²]	[%]	[°C]	[°F]	Flame retardant
POM	AT	PBT	UC	50	3426	16.8	3.44	-0.7	-45/90	-49/194	–
POM	AT	SS		60	4111	21.3	4.36	-0.7	-45/90	-49/194	–
Mold to order belts											
PE		PE	UC	18	1233	11.3	2.31	0.0	-70/65	-94/149	–
POM-HC	AT	PBT	UC	50	3426	17.3	3.54	-0.75	-45/90	-49/194	–
POM-HC	AT	SS		60	4111	21.4	4.38	-0.75	-45/90	-49/194	–
PP		PP	WT	30	2056	10.7	2.19	0.0	5/100	41/212	–
PP		SS		30	2056	15.6	3.2	0.0	5/100	41/212	–
PXX-HC	BK	PBT	UC	30	2056	11.8	2.42	-0.13	5/100	41/212	●
PXX-HC	BK	SS		30	2056	16.3	3.34	-0.13	5/100	41/212	●

■ AT (Anthracite), ■ BK (Black), □ UC (Uncolored), □ WT (White)

All measurements and tolerances apply at 21 °C; for temperature deviations please see Prolink manual chapter 4.4 "Temperature influence".
All imperial dimensions (inches) are rounded off.

[1] Flex radii: r1 = side flex, r2 = front flex on roller, r3 = back flex on load bearing roller, r4 = back flex on Hold Down shoe, r5 = back flex on roller

[2] Complies with DIN EN 13501-1 Cfl-s1 (and DIN 4102 B1)

● = available | – = not available | empty cells = not tested

[3] More materials and colors on request

S7-0 NSK | 0 % Opening | Non skid

Closed surface | Non skid surface for safety when walking on belt



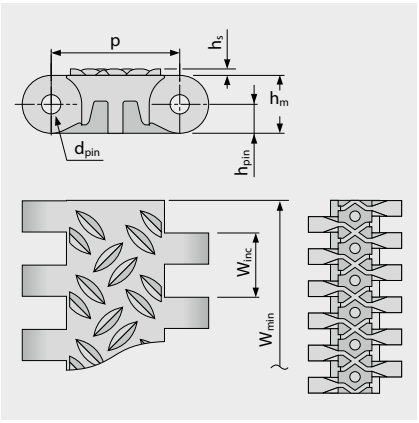

Variant specific dimensions [mm (in)]

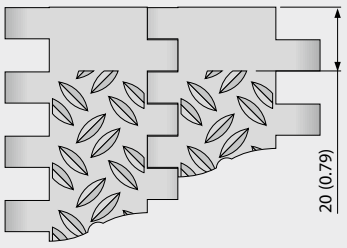

Belt dimensions

	p	d_{pin}	h_m	h_{pin}	h_s	W_{min}	W_{inc}	W_{tol}	Minimum flex radii[1]				
	Pitch	Pin Ø	Thickness	Pin position	Height	Width min.	Width Increment	Width tolerance [%]	r1 C_c x W_B	r2	r3	r4	r5
mm	40.0	6.0	18.0	9.0	2.0	80.0	20.0	±0.2	–	40.0	80.0	120.0	40.0
inch	1.57	0.24	0.71	0.35	0.08	3.15	0.79	±0.2	–	1.57	3.15	4.72	1.57

Available standard materials [3]

Belt		Pin		Nominal belt pull, straight		Weight		Width deviation	Temperature		Certificates[2]
Material	Color	Material	Color	[N/mm]	[lb/ft]	[kg/m²]	[lb/ft²]	[%]	[°C]	[°F]	Flame retardant
POM	AT	PBT	UC	50	3426	19.0	3.89	-0.75	-45/90	-49/194	–
POM	AT	SS		60	4111	23.5	4.81	-0.75	-45/90	-49/194	–
POM-HC	AT	PBT	UC	50	3426	19.5	3.99	-0.75	-45/90	-49/194	–
POM-HC	AT	SS		60	4111	24.0	4.92	-0.75	-45/90	-49/194	–
PXX-HC	BK	PBT	UC	30	2056	14.6	2.99	-0.13	5/100	41/212	●
PXX-HC	BK	SS		30	2056	20.0	4.1	-0.13	5/100	41/212	●
Mold to order belts											
PP		PP	WT	30	2056	13.3	2.72	0.0	5/100	41/212	–
PP		SS		30	2056	18.2	3.73	0.0	5/100	41/212	–

■ AT (Anthracite), ■ BK (Black), □ UC (Uncolored), □ WT (White)

All measurements and tolerances apply at 21 °C; for temperature deviations please see Prolink manual chapter 4.4 "Temperature influence".
All imperial dimensions (inches) are rounded off.

[1] Flex radii: r1 = side flex, r2 = front flex on roller, r3 = back flex on load bearing roller, r4 = back flex on Hold Down shoe, r5 = back flex on roller

[2] Complies with DIN EN 13501-1 Cfl-s1 (and DIN 4102 B1)

● = available | – = not available | empty cells = not tested

[3] More materials and colors on request

S7-6 NSK | 6 % Opening | Non skid

Open area (6 %) | Non skid surface with drainage holes for safety when walking on wet belts

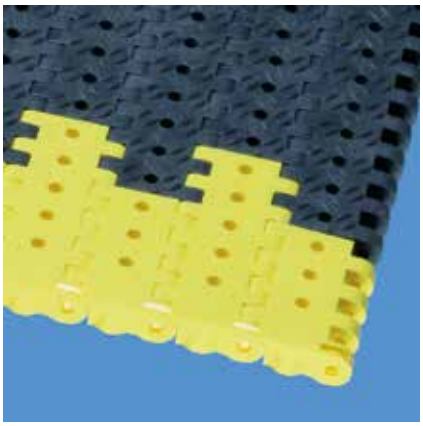

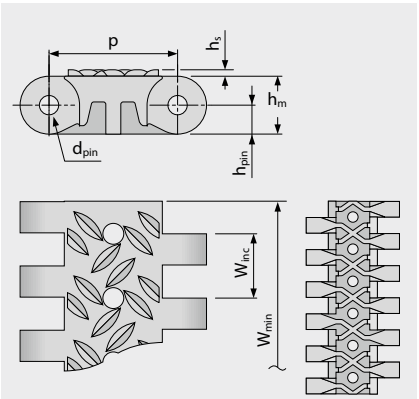

Variant specific dimensions [mm (in)]

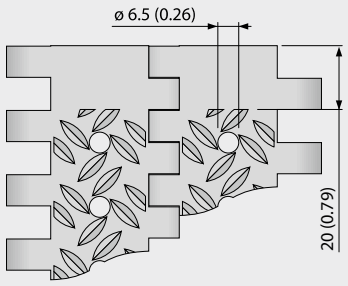

Belt dimensions

	p	d_{pin}	h_m	h_{pin}	h_s	W_{min}	W_{inc}	W_{tol}	Minimum flex radii[1]				
	Pitch	Pin Ø	Thickness	Pin position	Height	Width min.	Width Increment	Width tolerance [%]	r1 C_c x W_B	r2	r3	r4	r5
mm	40.0	6.0	18.0	9.0	2.0	80.0	20.0	±0.2	–	40.0	80.0	120.0	40.0
inch	1.57	0.24	0.71	0.35	0.08	3.15	0.79	±0.2	–	1.57	3.15	4.72	1.57

Available standard materials [3]

Belt		Pin		Nominal belt pull, straight		Weight		Width deviation	Temperature		Certificates[2]
Material	Color	Material	Color	[N/mm]	[lb/ft]	[kg/m²]	[lb/ft²]	[%]	[°C]	[°F]	Flame retardant
POM	AT	PBT	UC	50	3426	17.5	3.58	-0.7	-45/90	-49/194	–
POM	AT	SS		60	4111	22.0	4.51	-0.7	-45/90	-49/194	–
Mold to order belts											
PP		PP	WT	30	2056	11.2	2.29	0.0	5/100	41/212	–
PP		SS		30	2056	14.1	2.89	0.0	5/100	41/212	–
PXX-HC	BK	PBT	UC	30	2056	12.3	2.52	-0.13	5/100	41/212	●
PXX-HC	BK	SS		30	2056	17.2	3.52	-0.13	5/100	41/212	●

AT (Anthracite), BK (Black), UC (Uncolored), WT (White)

All measurements and tolerances apply at 21 °C; for temperature deviations please see Prolink manual chapter 4.4 "Temperature influence".
All imperial dimensions (inches) are rounded off.

[1] Flex radii: r1 = side flex, r2 = front flex on roller, r3 = back flex on load bearing roller, r4 = back flex on Hold Down shoe, r5 = back flex on roller

[2] Complies with DIN EN 13501-1 Cfl-s1 (and DIN 4102 B1)

● = available | – = not available | empty cells = not tested

[3] More materials and colors on request

S7-0 FRT1 | 0 % Opening | Friction top (Design 1)

Closed surface | Friction top version with replaceable rubber pads provides increased grip

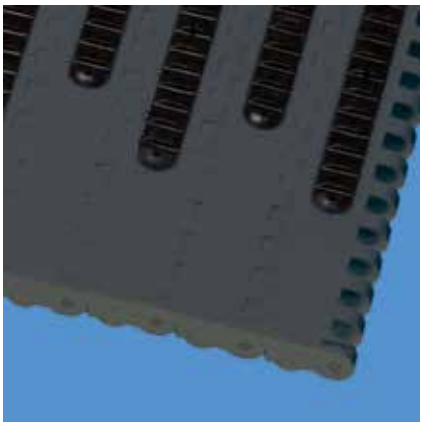

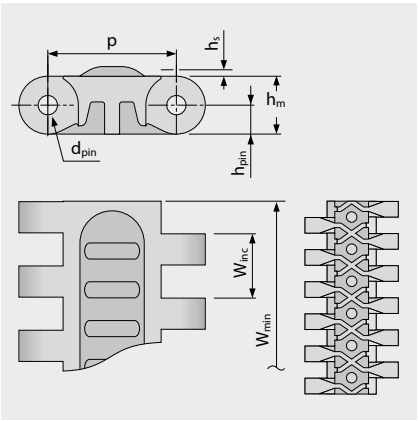

Variant specific dimensions [mm (in)]

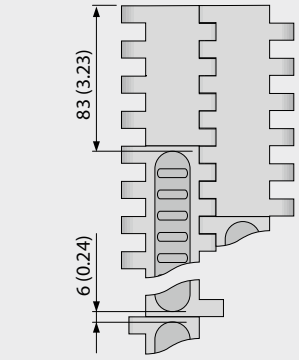

Belt dimensions

	p	d_{pin}	h_m	h_{pin}	h_s	W_{min}	W_{inc}	W_{tol}	Minimum flex radii[1]				
	Pitch	Pin Ø	Thickness	Pin position	Height	Width min.	Width Increment	Width tolerance [%]	r1 C_c x W_B	r2	r3	r4	r5
mm	40.0	6.0	18.0	9.0	3.0	360.0	200.0	±0.2	–	40.0	80.0	120.0	40.0
inch	1.57	0.24	0.71	0.35	0.12	14.17	7.87	±0.2	–	1.57	3.15	4.72	1.57

Mold to order belts [3]

Belt		Pin		Rubber		Nominal belt pull, straight		Weight		Width deviation	Temperature		Certificates[2]
Material	Color	Material	Color	Material	Color	[N/mm]	[lb/ft]	[kg/m²]	[lb/ft²]	[%]	[°C]	[°F]	Flame retardant
PE		PE	UC	R2	BK	18	1233	13.0	2.66	-0.35	-70/65	-94/149	–
POM	AT	PBT	UC	R2	BK	50	3426	19.0	3.89	-0.75	-45/90	-49/194	–
POM	AT	SS		R2	BK	60	4111	23.5	4.81	-0.75	-45/90	-49/194	–
PP		PP	WT	R2	BK	30	2056	12.4	2.54	0.0	5/100	41/212	–
PP		SS		R2	BK	30	2056	17.3	3.54	0.0	5/100	41/212	–

■ AT (Anthracite), ■ BK (Black), □ UC (Uncolored), □ WT (White)

All measurements and tolerances apply at 21 °C; for temperature deviations please see Prolink manual chapter 4.4 "Temperature influence".
All imperial dimensions (inches) are rounded off.

[1] Flex radii: r1 = side flex, r2 = front flex on roller, r3 = back flex on load bearing roller, r4 = back flex on Hold Down shoe, r5 = back flex on roller

[2] Complies with DIN EN 13501-1 Cfl-s1 (and DIN 4102 B1)

● = available | – = not available | empty cells = not tested

[3] More materials and colors on request

S7 SPR | Sprockets

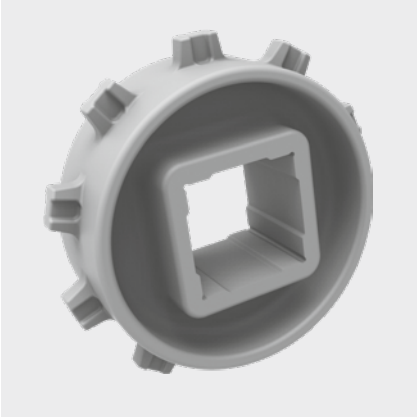

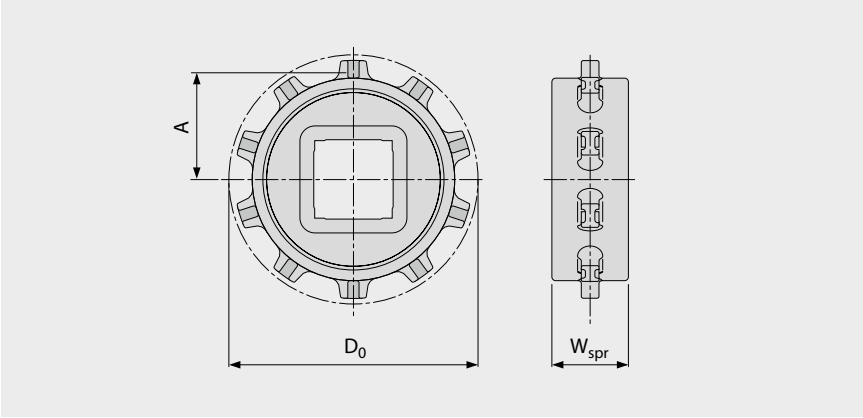

Main dimensions

Sprocket size (Number of teeth)		Z10	Z16 V2	Z20 V2
W_{spr}	mm	39.0	39.0	39.0
	inch	1.54	1.54	1.54
D_0	mm	129.7	204.8	255.1
	inch	5.11	8.06	10.04
A_{max}	mm	55.9	93.5	118.6
	inch	2.20	3.68	4.67
A_{min}	mm	53.2	91.5	117.1
	inch	2.09	3.60	4.61

Shaft bores (● = Round, ■ = Square; ❍ or ❑ = mold to order)

40	mm	■		
60	mm		■	■
80	mm		■	❑
90	mm			■
1.5	inch	■		
2.5	inch		■	❑
3.5	inch			❑

Material: PA, Color: LG

LG (Light gray)

All measurements and tolerances apply at 21 °C.
All imperial dimensions (inches) are rounded off.
For detailed sprocket and shaft dimensions see appendix 6.3
Number of sprockets (sprocket spacing distance) see chapter 3.2

S7-0 FLT WSC | Wheelstopper

Stiff and strong profiles (interrupted for finger plates)



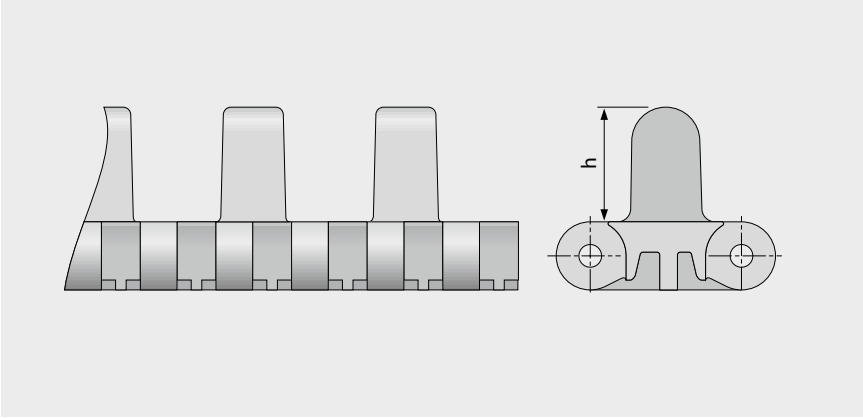

Basic data

Material	Color	Height (h)
		30 mm 1.2 inch
POM	DB	●

Molded width: 160 mm (6.3 in)

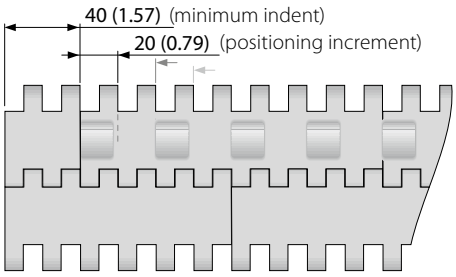

Configuration S7-0 FLT WSC

DB (Dark blue)

All measurements and tolerances apply at 21 °C; for temperature deviations please see Prolink manual chapter 4.4 "Temperature influence".
All imperial dimensions (inches) are rounded off.
Note: Use of accessory in a belt may impact on the minimum design radii. Please see chapter 6.3 for further information.

S7-0 NCL WSS I20 | Wheelstopper

Smalll and stiff profiles (interrupted for finger plates)



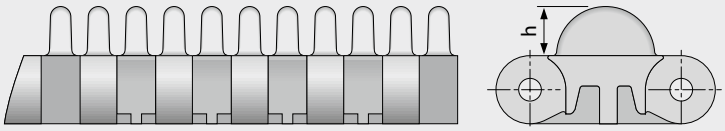

Basic data

Material	Color	Height (h)
		13 mm 0.5 inch
POM	YL	●

Molded width: 80 mm (3.2 in), 120 mm (4.7 in)

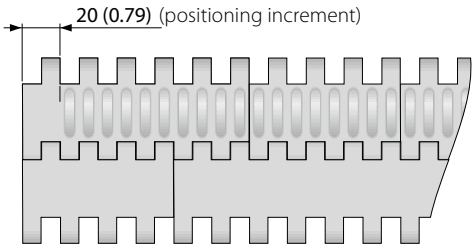

Configuration S7-0 NCL WSS I20

YL (Yellow)

All measurements and tolerances apply at 21 °C; for temperature deviations please see Prolink manual chapter 4.4 “Temperature influence“.
All imperial dimensions (inches) are rounded off.
Note: Use of accessory in a belt may impact on the minimum design radii. Please see chapter 6.3 for further information.

S7 PRR | Pin Retained Rollers

For applications where low back pressure accumulation or product separation is required

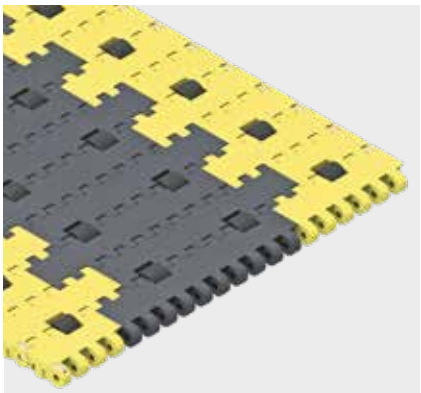

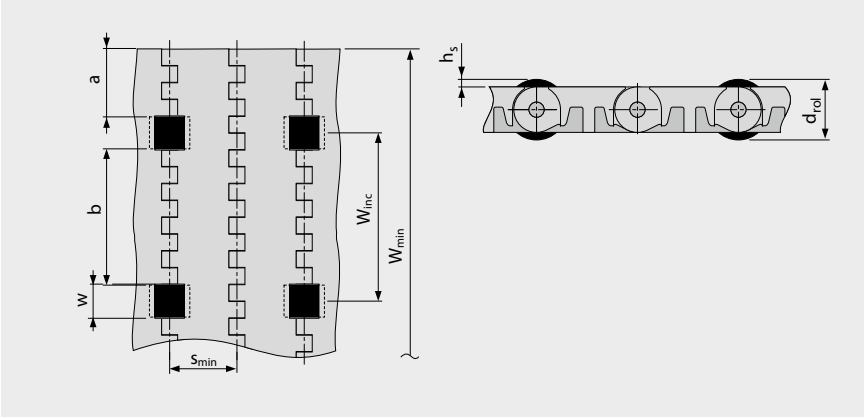

- For low back pressure wearstrips are to be positioned between the rollers
- For product separation the wear-strips are to be positioned below the rollers
- For all materials and surfaces
- Rollers available in POM BK

Dimensions

w	20 mm (0.79 in)	Roller cut out width (roller width 19 mm (0.75 in))
h_s	3.5 mm (0.14 in)	Height of rollers above surface
d_{rol}	25 mm (0.98 in)	Roller diameter
a	40 mm (1.6 in)	Minimum indent
b	80 mm (3.15 in)	Standard distance between rollers across belt width
s	n x s_{min}	Roller spacing in travel direction (standard: n = 2)
s_{min}	40 mm (1.6 in)	Min. roller spacing in travel direction
W_{inc}	100 mm (3.9 in)	Width increment
W_{min}	200 mm (7.9 in)	Min. belt width
W_B		Belt width
n_{rol}		Number of rollers across belt width

Allowable belt pull

To determine admissible belt pull calculate effective belt width $W_{B,ef}$ by

$W_{B,ef} = W_B - (w \times n_{rol})$

Example: W_B = 400 mm (15.75 in); w = 20 mm (0.79 in); n_{rol} = 4

$W_{B,ef} = 400 - (20 \times 4) = 320$ mm

$W_{B,ef} = 15.75 - (0.79 \times 4) = 12.6$ in

Note: Sprocket must not be placed inline with rollers. Deviation in roller spacing possible, please get in contact to customer service. Coefficient of friction between belt and conveyed product in accumulation mode μ_{acc} = 0.04, I.e. the accumulation pressure is approx. 4 % of the weight of the backed up product.

All measurements and tolerances apply at 21 °C; for temperature deviations please see Prolink manual chapter 4.4 "Temperature influence".
All imperial dimensions (inches) are rounded off.
Note: Use of accessory in a belt may impact on the minimum design radii. Please see chapter 6.3 for further information.

siegling prolink
modular belts

SERIES 8

Straight running belts
Pitch 25.4 mm (1 in)

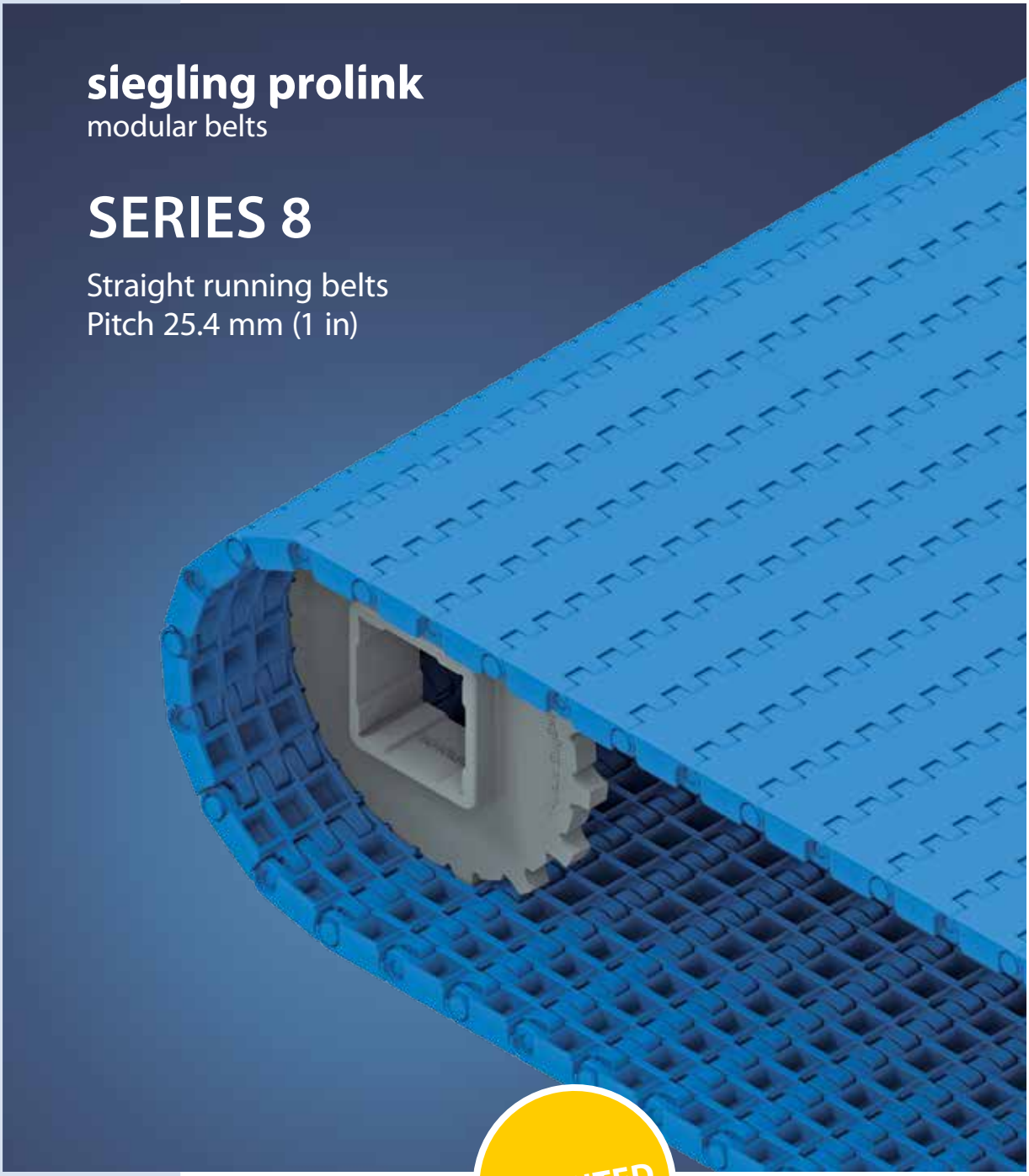

PATENTED

SERIES 8 | **OVERVIEW**

Straight running belts | Pitch 25.4 mm (1 in)

Belts for medium to heavy-duty applications

Side view scale 1:1

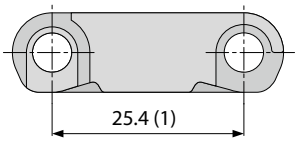

Design characteristics

- Closed hinge design provides high belt pull capacity
- Rigid module design makes belt suitable for long conveyors
- Exceptionally robust and durable module and sprocket design
- Closed solid edge design
- Flame retardant version available (PXX-HC – in line with DIN EN 13501-1)

Basic data

Pitch	25.4 mm (1 in)
Belt width min.	38.1 mm (1.5 in)
Width increments	12.7 mm (0.5 in)
Hinge pins	5 mm (0.2 in) made of plastic (PBT, PP, PA-HT). One-piece up to a belt width of 1200 mm (47 in).

Available surface pattern and opening area

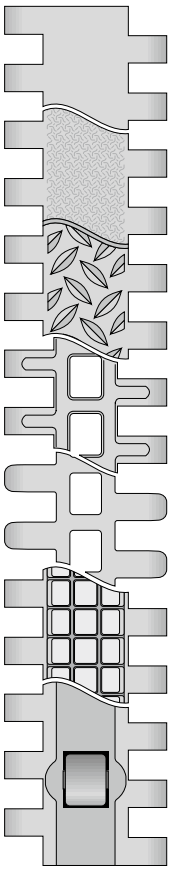

S8.1-0 FLT
Closed, smooth surface

S8.1-0 SRS
Closed, slip-resistant surface

S8.1-0 NSK/S8.1-0 NSK2
Closed surface with non skid pattern

S8.1-25 RAT
Open (25 %) surface with rounded contact surfaces

S8.1-30 FLT
Open (30 %) flat top surface with rounded hinges

S8-0 FRT1
Closed surface with friction top

S8-0 RTP A90
Closed surface with roller top

Sprockets
in different sizes with round or square bore, one part and split



Profiles
in different heights and designs for inclines

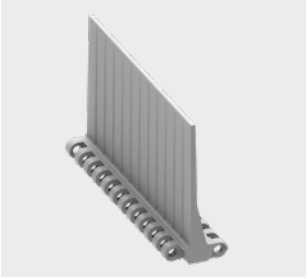

Side guards
in different heights for retention of bulk products

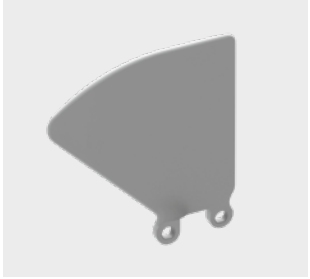

Hold Down Tabs
Hold Down Tabs for additional guiding



S8.1-0 FLT | 0 % Opening | Flat top

Closed, smooth surface | Flat top surface

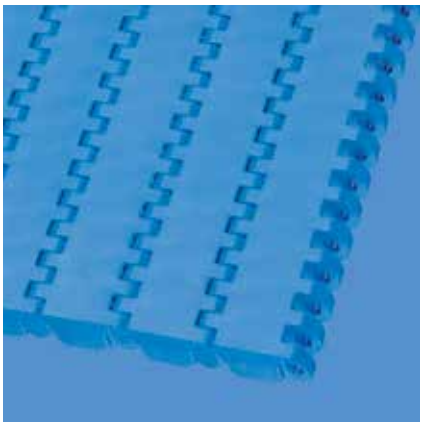

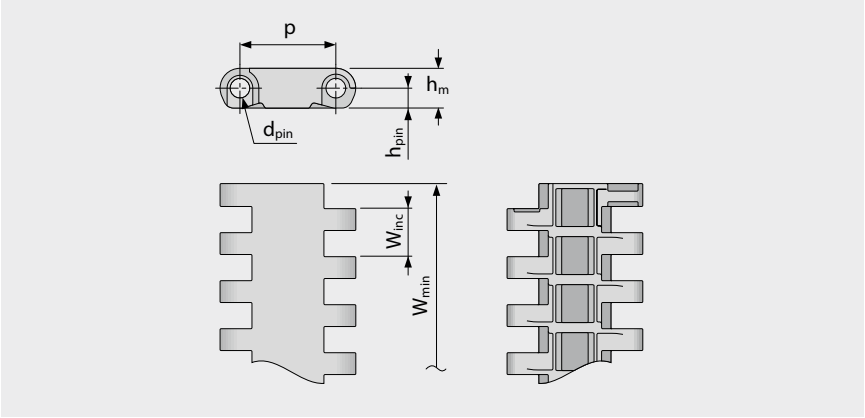

Belt dimensions

	p	d_{pin}	h_m	h_{pin}	h_s	W_{min}	W_{inc}	W_{tol}	Minimum flex radii[1]				
	Pitch	Pin Ø	Thickness	Pin position	Height	Width min.	Width Increment	Width tolerance [%]	r1 C_c x W_B	r2	r3	r4	r5
mm	25.4	5.0	10.5	5.3	0.0	38.1	12.7	±0.2	–	25.4	50.8	76.2	25.4
inch	1.0	0.2	0.41	0.21	0.0	1.5	0.5	±0.2	–	1.0	2.0	3.0	1.0

Available standard materials [3]

Belt		Pin		Nominal belt pull, straight		Weight		Width deviation	Temperature		Certificates[2]		
Material	Color	Material	Color	[N/mm]	[lb/ft]	[kg/m²]	[lb/ft²]	[%]	[°C]	[°F]	FDA	EU	MHLW
PA-HT	BK	PA-HT	BK	30	2056	10.7	2.19	1.49	-30/155	-22/311	–	–	
POM	BL	PBT	BL	40	2741	11.0	2.25	-0.31	-45/90	-49/194	●	●	●
POM	LG	PBT	UC	40	2741	11.0	2.25	-0.31	-45/90	-49/194	●	●	●
POM	WT	PBT	UC	40	2741	11.0	2.25	-0.31	-45/90	-49/194	●	●	●
POM-CR	AT	PBT	UC	40	2741	11.0	2.25	-0.31	-45/90	-49/194			
PP	WT	PP	WT	20	1370	7.1	1.45	0.0	5/100	41/212	●	●	●
PP	LG	PP	WT	20	1370	7.1	1.45	0.0	5/100	41/212	●	●	●
PP	BL	PP	BL	20	1370	7.1	1.45	0.0	5/100	41/212	●	●	●
Mold to order belts													
PXX-HC	BK	PBT	BL	20	1370	7.9	1.62	0.0	5/100	41/212	–	–	

Mold to width available in: 51 mm (2.0 in), 76 mm (3.0 in), 152 mm (6.0 in), 229 mm (9.0 in)

AT (Anthracite), BK (Black), BL (Blue), LG (Light gray), UC (Uncolored), WT (White)

All measurements and tolerances apply at 21 °C; for temperature deviations please see Prolink manual chapter 4.4 "Temperature influence".
All imperial dimensions (inches) are rounded off.

[1] Flex radii: r1 = side flex, r2 = front flex on roller, r3 = back flex on load bearing roller, r4 = back flex on Hold Down shoe, r5 = back flex on roller

[2] Complies with FDA 21 CFR | Complies with (EU) 10/2011 and (EC) 1935/2004 regulations regarding the raw materials used and the migration thresholds | Complies with Japanese MHLW Notification 370
● = available | – = not available | empty cells = not tested

[3] More materials and colors on request

S8.1-0 SRS | 0 % Opening | Slip-resistant surface

Closed surface | Slip-resistant surface, pleasant to walk and kneel on

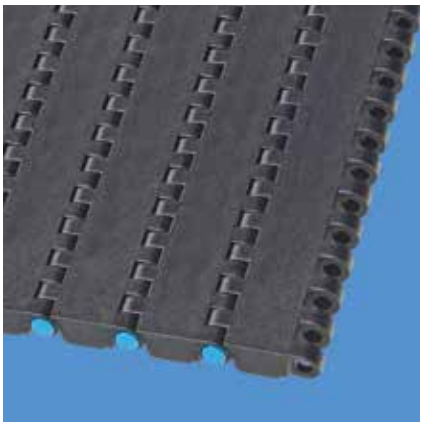

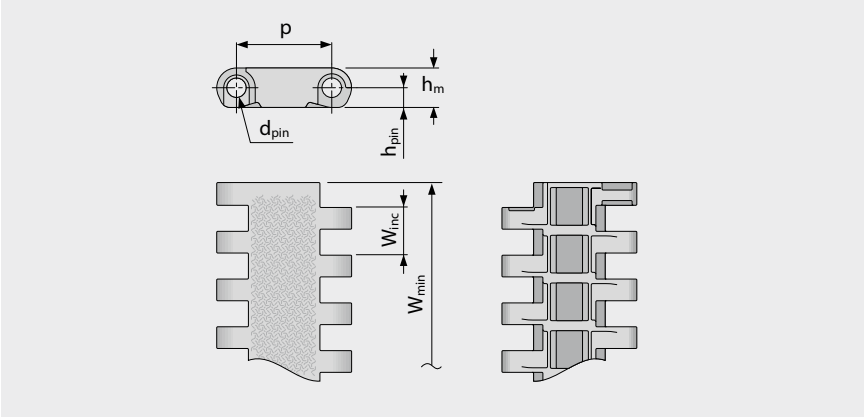

Belt dimensions

	p	d_{pin}	h_m	h_{pin}	h_s	W_{min}	W_{inc}	W_{tol}	Minimum flex radii[1]				
	Pitch	Pin Ø	Thickness	Pin position	Height	Width min.	Width Increment	Width tolerance [%]	r1 C_c x W_B	r2	r3	r4	r5
mm	25.4	5.0	10.5	5.3	0.0	38.1	12.7	±0.2	–	25.4	50.8	76.2	25.4
inch	1.0	0.2	0.41	0.21	0.0	1.5	0.5	±0.2	–	1.0	2.0	3.0	1.0

Available standard materials [3]

Belt		Pin		Nominal belt pull, straight		Weight		Width deviation	Temperature		Certificates[2]
Material	Color	Material	Color	[N/mm]	[lb/ft]	[kg/m²]	[lb/ft²]	[%]	[°C]	[°F]	Flame retardant
POM-CR	AT	PBT	BL	40	2741	11.0	2.25	-0.31	-45/90	-49/194	–
POM-HC	AT	PBT	BL	40	2741	11.0	2.25	-0.31	-45/90	-49/194	–
PP	LG	PP	WT	20	1370	7.1	1.45	0.0	5/100	41/212	
PXX-HC	BK	PBT	BL	20	1370	7.9	1.62	0.0	5/100	41/212	●

Mold to width available in: 51 mm (2.0 in), 76 mm (3.0 in), 152 mm (6.0 in), 229 mm (9.0 in)

AT (Anthracite), BK (Black), BL (Blue), LG (Light gray), WT (White)

All measurements and tolerances apply at 21 °C; for temperature deviations please see Prolink manual chapter 4.4 "Temperature influence".
All imperial dimensions (inches) are rounded off.

[1] Flex radii: r1 = side flex, r2 = front flex on roller, r3 = back flex on load bearing roller, r4 = back flex on Hold Down shoe, r5 = back flex on roller

[2] Complies with DIN EN 13501-1 Cfl-s1 (and DIN 4102 B1)

● = available | – = not available | empty cells = not tested

[3] More materials and colors on request

S8.1-0 NSK | 0 % Opening | Non skid

Closed surface | Non skid surface for increased safety when walking on belt | Flat top sections across the belt width for supporting the belt on the return

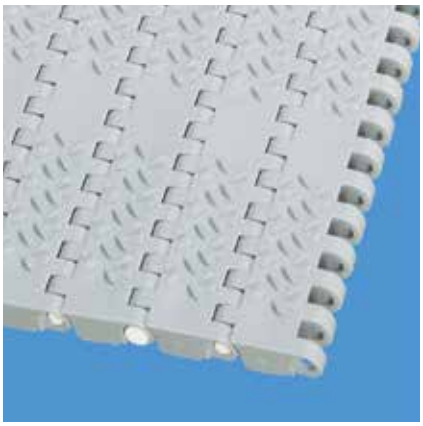

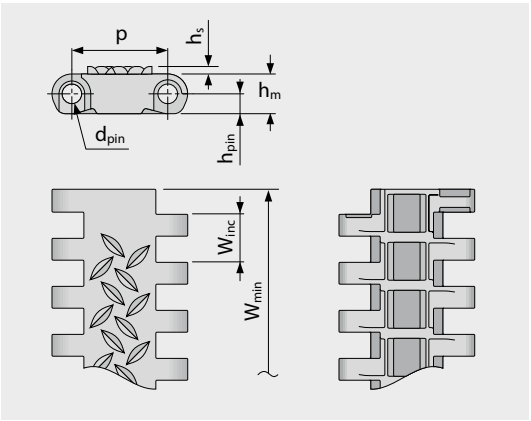

Variant specific dimensions [mm (in)]

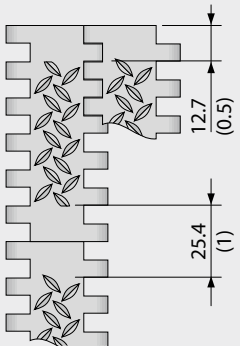

Belt dimensions

	p	d_{pin}	h_m	h_{pin}	h_s	W_{min}	W_{inc}	W_{tol}	Minimum flex radii[1]				
	Pitch	Pin Ø	Thickness	Pin position	Height	Width min.	Width Increment	Width tolerance [%]	r1 C_c x W_B	r2	r3	r4	r5
mm	25.4	5.0	10.5	5.3	2.0	38.1	12.7	±0.2	–	25.4	50.8	76.2	25.4
inch	1.0	0.2	0.41	0.21	0.08	1.5	0.5	±0.2	–	1.0	2.0	3.0	1.0

Available standard materials [3]

Belt		Pin		Nominal belt pull, straight		Weight		Width deviation	Temperature		Certificates[2]		
Material	Color	Material	Color	[N/mm]	[lb/ft]	[kg/m²]	[lb/ft²]	[%]	[°C]	[°F]	FDA	EU	MHLW
POM	BL	PBT	BL	40	2741	11.0	2.25	-0.31	-45/90	-49/194	●	●	●
PP	LG	PP	WT	20	1370	7.1	1.45	0.0	5/100	41/212	●	●	●
Mold to order belts													
PXX-HC	BK	PBT	BL	20	1370	7.9	1.62	0.0	5/100	41/212	–	–	

Mold to width available in: 229 mm (9.0 in)

■ BK (Black), ■ BL (Blue), ■ LG (Light gray), □ WT (White)

All measurements and tolerances apply at 21 °C; for temperature deviations please see Prolink manual chapter 4.4 "Temperature influence".
All imperial dimensions (inches) are rounded off.

[1] Flex radii: r1 = side flex, r2 = front flex on roller, r3 = back flex on load bearing roller, r4 = back flex on Hold Down shoe, r5 = back flex on roller

[2] Complies with FDA 21 CFR | Complies with (EU) 10/2011 and (EC) 1935/2004 regulations regarding the raw materials used and the migration thresholds | Complies with Japanese MHLW Notification 370
● = available | – = not available | empty cells = not tested

[3] More materials and colors on request

S8.1-0 NSK2 | 0 % Opening | Non skid (Design 2)

Closed surface | Non skid surface for increased safety when walking on belt | Uninterrupted NSK-structure across the full belt width

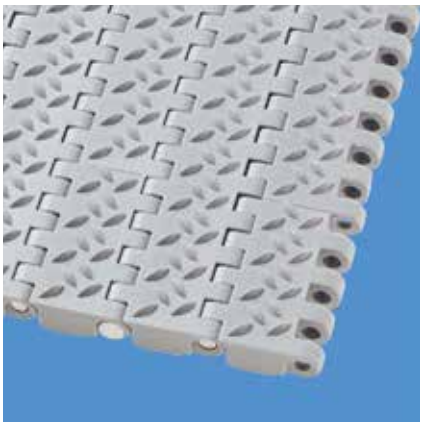

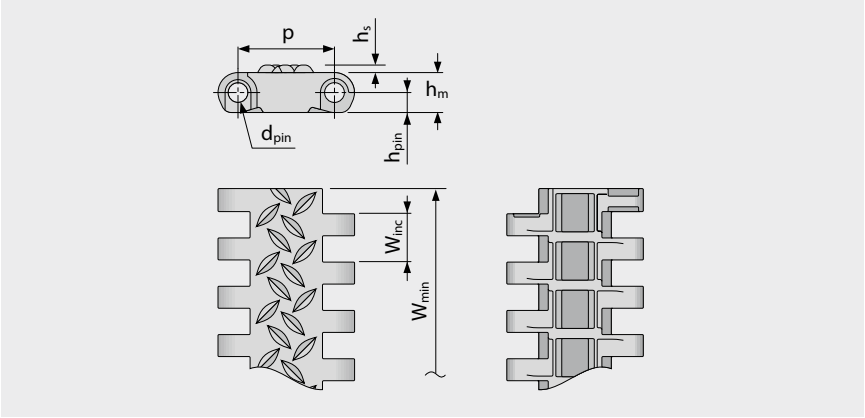

Belt dimensions

	p	d_{pin}	h_m	h_{pin}	h_s	W_{min}	W_{inc}	W_{tol}	Minimum flex radii[1]			
	Pitch	Pin Ø	Thickness	Pin position	Height	Width min.	Width Increment	Width tolerance [%]	r1 C_c x W_B	r2	r3	r4	r5
mm	25.4	5.0	10.5	5.3	2.0	38.1	12.7	±0.2	–	25.4	50.8	76.2	25.4
inch	1.0	0.2	0.41	0.21	0.08	1.5	0.5	±0.2	–	1.0	2.0	3.0	1.0

Available standard materials [3]

Belt		Pin		Nominal belt pull, straight		Weight		Width deviation	Temperature		Certificates[2]		
Material	Color	Material	Color	[N/mm]	[lb/ft]	[kg/m²]	[lb/ft²]	[%]	[°C]	[°F]	FDA	EU	MHLW
PP	LG	PP	WT	20	1370	7.1	1.45	0.0	5/100	41/212	●	●	●

Mold to width available in: 229 mm (9.0 in)

LG (Light gray), WT (White)

All measurements and tolerances apply at 21 °C; for temperature deviations please see Prolink manual chapter 4.4 "Temperature influence".
All imperial dimensions (inches) are rounded off.

[1] Flex radii: r1 = side flex, r2 = front flex on roller, r3 = back flex on load bearing roller, r4 = back flex on Hold Down shoe, r5 = back flex on roller

[2] Complies with FDA 21 CFR | Complies with (EU) 10/2011 and (EC) 1935/2004 regulations regarding the raw materials used and the migration thresholds | Complies with Japanese MHLW Notification 370
● = available | – = not available | empty cells = not tested

[3] More materials and colors on request

S8.1-25 RAT | 25 % Opening | Radius top

Open area (25 %) with rounded contact surfaces | 24 % contact area (Largest opening: 9.7 x 7 mm/0.38 x 0.28 in) | Radius top belt surface ensures minimum product contact and good release characteristics



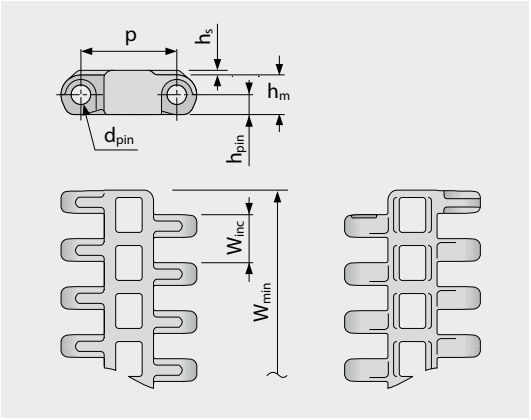

Variant specific dimensions [mm (in)]

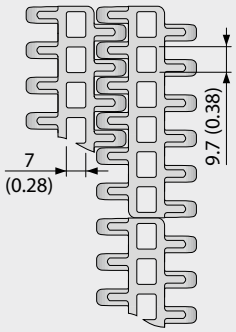

Belt dimensions

	p	d_{pin}	h_m	h_{pin}	h_s	W_{min}	W_{inc}	W_{tol}	Minimum flex radii[1]				
	Pitch	Pin Ø	Thickness	Pin position	Height	Width min.	Width Increment	Width tolerance [%]	r1 C_c x W_B	r2	r3	r4	r5
mm	25.4	5.0	10.5	5.3	1.2	38.1	12.7	±0.2	–	25.4	50.8	76.2	25.4
inch	1.0	0.2	0.41	0.21	0.05	1.5	0.5	±0.2	–	1.0	2.0	3.0	1.0

Available standard materials [3]

Belt		Pin		Nominal belt pull, straight		Weight		Width deviation	Temperature		Certificates[2]		
Material	Color	Material	Color	[N/mm]	[lb/ft]	[kg/m²]	[lb/ft²]	[%]	[°C]	[°F]	FDA	EU	MHLW
PA-HT	BK	PA-HT	BK	30	2056	9.8	2.01	1.53	-30/155	-22/311	–	–	
POM	BL	PBT	BL	40	2741	9.7	1.99	-0.61	-45/90	-49/194	●	●	●
PP	LG	PP	WT	20	1370	6.4	1.31	0.0	5/100	41/212	●	●	●
PP	BL	PP	BL	20	1370	6.4	1.31	0.0	5/100	41/212	●	●	●
Mold to order belts													
PE		PE		15	1028	6.7	1.37	-0.31	-70/65	-94/149			

Mold to width available in: 76 mm (3.0 in), 152 mm (6.0 in), 229 mm (9.0 in)

■ BK (Black), ■ BL (Blue), ■ LG (Light gray), □ WT (White)

All measurements and tolerances apply at 21 °C; for temperature deviations please see Prolink manual chapter 4.4 "Temperature influence".
All imperial dimensions (inches) are rounded off.

[1] Flex radii: r1 = side flex, r2 = front flex on roller, r3 = back flex on load bearing roller, r4 = back flex on Hold Down shoe, r5 = back flex on roller

[2] Complies with FDA 21 CFR | Complies with (EU) 10/2011 and (EC) 1935/2004 regulations regarding the raw materials used and the migration thresholds | Complies with Japanese MHLW Notification 370
● = available | – = not available | empty cells = not tested

[3] More materials and colors on request

S8.1-30 FLT | 30 % Opening | Flat top

Open version (30 %) | Flat top surface | 53 % contact area (Largest opening: 9.7 x 7 mm/0.38 x 0.28 in) | Smooth surface

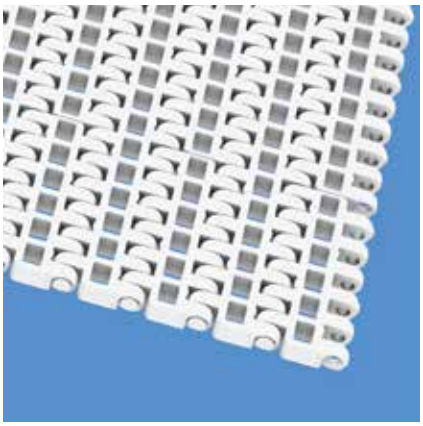

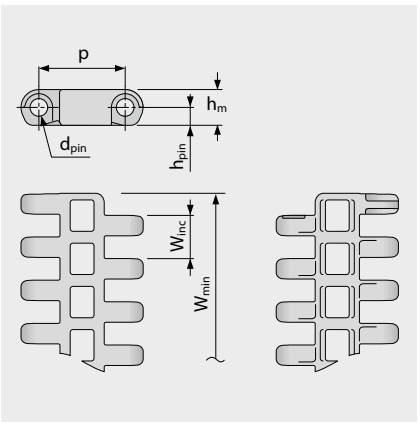

Variant specific dimensions [mm (in)]

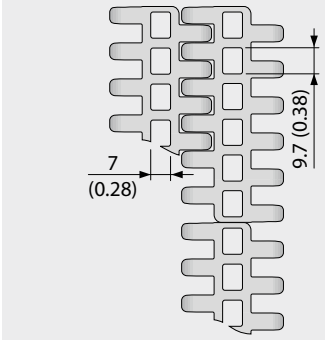

Belt dimensions

	p	d_{pin}	h_m	h_{pin}	h_s	W_{min}	W_{inc}	W_{tol}	Minimum flex radii[1]				
	Pitch	Pin Ø	Thickness	Pin position	Height	Width min.	Width Increment	Width tolerance [%]	r1 C_c x W_B	r2	r3	r4	r5
mm	25.4	5.0	10.5	5.3	0.0	76.2	12.7	±0.2	–	25.4	50.8	76.2	25.4
inch	1.0	0.2	0.41	0.21	0.0	3.0	0.5	±0.2	–	1.0	2.0	3.0	1.0

Available standard materials [3]

Belt		Pin		Nominal belt pull, straight		Weight		Width deviation	Temperature		Certificates[2]		
Material	Color	Material	Color	[N/mm]	[lb/ft]	[kg/m²]	[lb/ft²]	[%]	[°C]	[°F]	FDA	EU	MHLW
POM	BL	PBT	BL	40	2741	9.0	1.84	-0.58	-45/90	-49/194	●	●	●
PP	BL	PP	BL	20	1370	5.8	1.19	0.0	5/100	41/212	●	●	●
PP	WT	PP	WT	20	1370	5.8	1.19	0.0	5/100	41/212	●	●	●
Mold to order belts													
PE	BL	PE	UC	15	1028	6.1	1.25	-0.31	-70/65	-94/149	●	●	●

Mold to width available in: 76 mm (3.0 in), 191 mm (7.5 in)

BL (Blue), UC (Uncolored), WT (White)

All measurements and tolerances apply at 21 °C; for temperature deviations please see Prolink manual chapter 4.4 "Temperature influence".
All imperial dimensions (inches) are rounded off.

[1] Flex radii: r1 = side flex, r2 = front flex on roller, r3 = back flex on load bearing roller, r4 = back flex on Hold Down shoe, r5 = back flex on roller

[2] Complies with FDA 21 CFR | Complies with (EU) 10/2011 and (EC) 1935/2004 regulations regarding the raw materials used and the migration thresholds | Complies with Japanese MHLW Notification 370

● = available | – = not available | empty cells = not tested

[3] More materials and colors on request

S8-0 FRT1 | 0 % Opening | Friction top (Design 1)

Closed surface | Friction top with cube-shaped High Grip pads | Grooves inbetween to improve flexibility and to channel dirt away from the friction surface

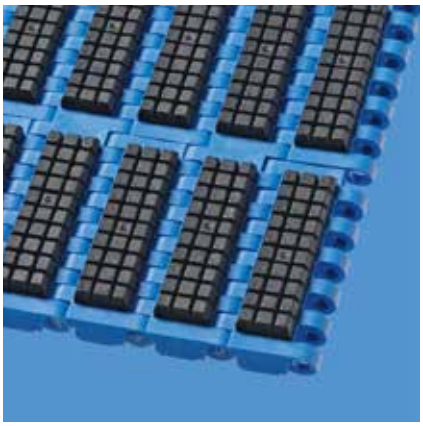

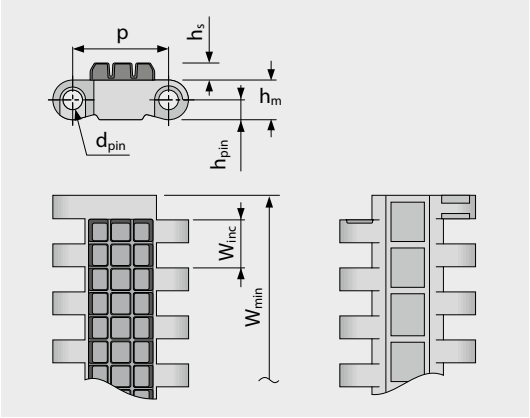

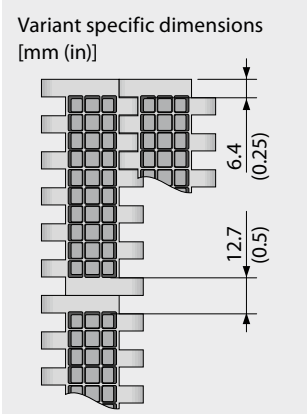

Belt dimensions

	p	d_{pin}	h_m	h_{pin}	h_s	W_{min}	W_{inc}	W_{tol}	Minimum flex radii[1]				
	Pitch	Pin Ø	Thickness	Pin position	Height	Width min.	Width Increment	Width tolerance [%]	r1 C_c x W_B	r2	r3	r4	r5
mm	25.4	5.0	10.5	5.3	4.5	76.2	76.2	±0.2	–	25.4	50.8	76.2	25.4
inch	1.0	0.2	0.41	0.21	0.18	3.0	3.0	±0.2	–	1.0	2.0	3.0	1.0

Available standard materials [3]

Belt		Pin		Rubber		Nominal belt pull, straight		Weight		Width deviation	Temperature		Certificates[2]		
Material	Color	Material	Color	Material	color	[N/mm]	[lb/ft]	[kg/m²]	[lb/ft²]	[%]	[°C]	[°F]	FDA	EU	MHLW
POM	BL	PBT	BL	R6	BK	40	2741	17.7	3.63	-0.31	-45/60	-49/140	–	–	
POM	AT	PBT	BL	R6	BK	40	2741	17.7	3.63	-0.31	-45/60	-49/140	–	–	
PP	LG	PP	WT	R7	BK	20	1370	12.6	2.58	0.0	5/100	41/212	●	●	
PP	BL	PP	BL	R4	BG	20	1370	12.6	2.58	0.0	5/100	41/212			
Mold to order belts															
PP	BL	PP	BL	R7	BG	20	1370	12.6	2.58	0.0	5/100	41/212	●	●	

Mold to width available in: 229 mm (9.0 in)

AT (Anthracite), BG (Beige), BK (Black), BL (Blue), LG (Light gray), WT (White)

All measurements and tolerances apply at 21 °C; for temperature deviations please see Prolink manual chapter 4.4 "Temperature influence".
All imperial dimensions (inches) are rounded off.

[1] Flex radii: r1 = side flex, r2 = front flex on roller, r3 = back flex on load bearing roller, r4 = back flex on Hold Down shoe, r5 = back flex on roller

[2] Complies with FDA 21 CFR | Complies with (EU) 10/2011 and (EC) 1935/2004 regulations regarding the raw materials used and the migration thresholds | Complies with Japanese MHLW Notification 370
● = available | – = not available | empty cells = not tested

[3] More materials and colors on request

S8-0 RTP A90 | 0 % Opening | Roller top · A90

Closed surface with roller top at 90° to the direction of travel | version for low-friction merging of products lateral

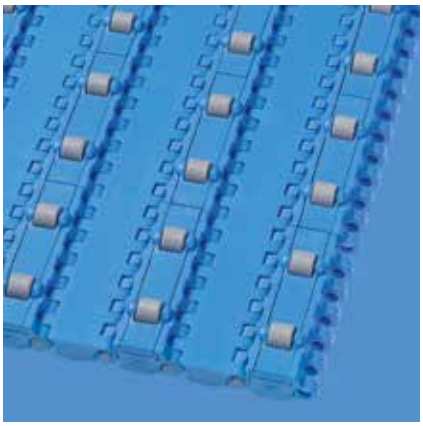

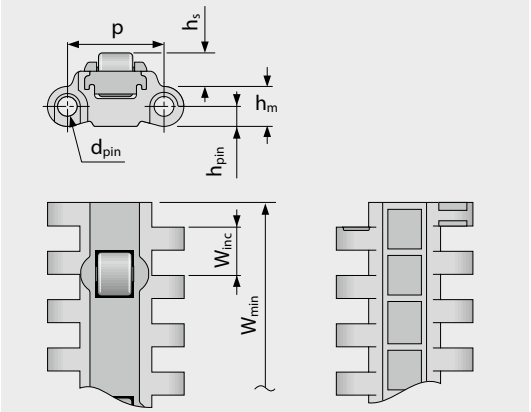

Variant specific dimensions
[mm (in)]

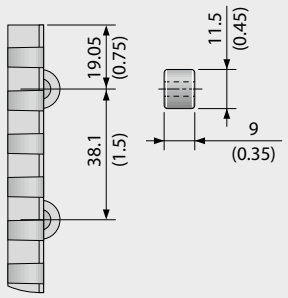

Belt dimensions

	p	d_{pin}	h_m	h_{pin}	h_s	W_{min}	W_{inc}	W_{tol}	Minimum flex radii[1]				
	Pitch	Pin Ø	Thickness	Pin position	Height	Width min.	Width Increment	Width tolerance [%]	r1 C_c x W_B	r2	r3	r4	r5
mm	25.4	5.0	10.5	5.3	8.8	228.6	76.2	±0.2	–	25.4	50.8	76.2	25.4
inch	1.0	0.2	0.41	0.21	0.35	9.0	3.0	±0.2	–	1.0	2.0	3.0	1.0

Available standard materials [3]

Belt		Pin		Nominal belt pull, straight		Weight		Width deviation	Temperature		Certificates[2]		
Material	Color	Material	Color	[N/mm]	[lb/ft]	[kg/m²]	[lb/ft²]	[%]	[°C]	[°F]	FDA	EU	MHLW
POM	BL	PBT	BL	20	1370	14.3	2.93	-0.31	-45/90	-49/194	●	●	●

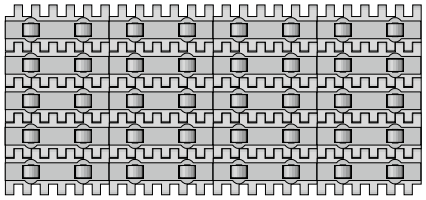

Standard configuration

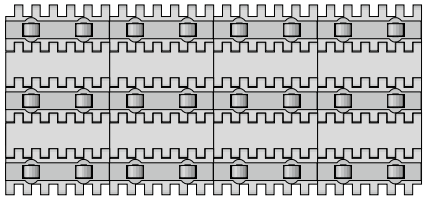

Configuration 1

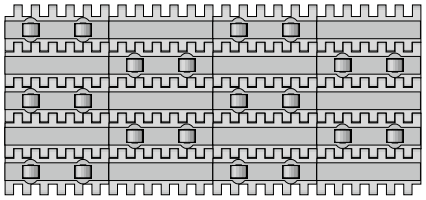

Configuration 2

BL (Blue)

All measurements and tolerances apply at 21 °C; for temperature deviations please see Prolink manual chapter 4.4 "Temperature influence".
All imperial dimensions (inches) are rounded off.

[1] Flex radii: r1 = side flex, r2 = front flex on roller, r3 = back flex on load bearing roller, r4 = back flex on Hold Down shoe, r5 = back flex on roller

[2] Complies with FDA 21 CFR | Complies with (EU) 10/2011 and (EC) 1935/2004 regulations regarding the raw materials used and the migration thresholds | Complies with Japanese MHLW Notification 370

● = available | – = not available | empty cells = not tested

[3] More materials and colors on request

S8.1-30 FLT GT | 30 % Opening | Flat top · Guiding Tabs

Open version (30 %) | Flat top surface | 53 % contact area (Largest opening: 9.7 x 7 mm/0.38 x 0.28 in) | Smooth surface | with guiding tabs for tracking of chain on long hygiene critical conveyors

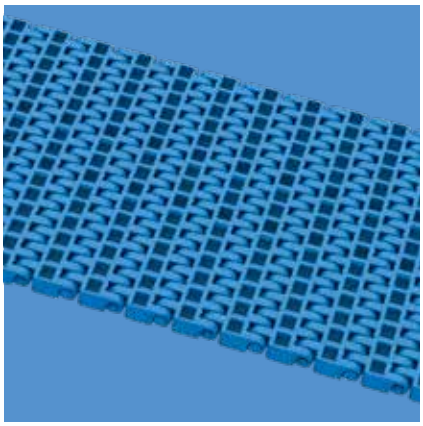

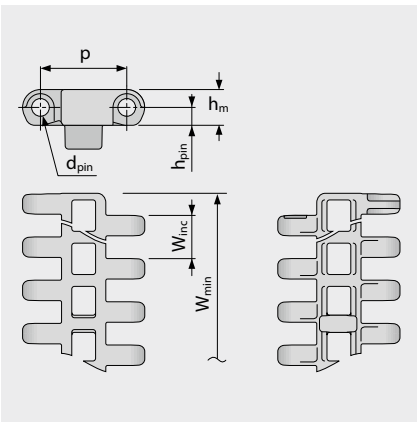

Variant specific dimensions [mm (in)]

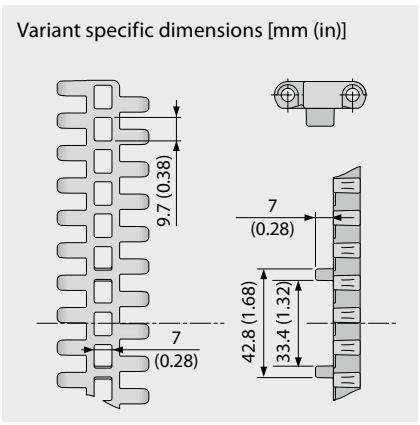

Belt dimensions

	p	d_{pin}	h_m	h_{pin}	h_s	W_{min}	W_{inc}	W_{tol}	Minimum flex radii[1]			
	Pitch	Pin Ø	Thickness	Pin position	Height	Width min.	Width Increment	Width tolerance [%]	r1 C_c x W_B	r2	r3	r4	r5
mm	25.4	5.0	10.5	5.3	0.0	191.0	0.0	±0.2	–	25.4	50.8	76.2	25.4
inch	1.0	0.2	0.41	0.21	0.0	7.52	0.0	±0.2	–	1.0	2.0	3.0	1.0

Available standard materials [3]

Belt		Pin		Nominal belt pull, straight		Weight		Width deviation	Temperature		Certificates[2]		
Material	Color	Material	Color	[N/mm]	[lb/ft]	[kg/m²]	[lb/ft²]	[%]	[°C]	[°F]	FDA	EU	MHLW
POM	BL	PBT	BL	40	2741	9.1	1.86	-0.58	-45/90	-49/194	●	●	●
Mold to order belts													
PE	BL	PE	UC	15	1028	6.1	1.25	-0.31	-70/65	-94/149	●	●	●
PP	BL	PP	BL	20	1370	5.9	1.21	0.0	5/100	41/212	●	●	●
PP	WT	PP	WT	20	1370	5.9	1.21	0.0	5/100	41/212	●	●	●

Mold to width available in: 191 mm (7.5 in)



Standard belt configuration (bottom side)
GT on every row

■ BL (Blue), □ UC (Uncolored), □ WT (White)

All measurements and tolerances apply at 21 °C; for temperature deviations please see Prolink manual chapter 4.4 "Temperature influence".
All imperial dimensions (inches) are rounded off.

[1] Flex radii: r1 = side flex, r2 = front flex on roller, r3 = back flex on load bearing roller, r4 = back flex on Hold Down shoe, r5 = back flex on roller

[2] Complies with FDA 21 CFR | Complies with (EU) 10/2011 and (EC) 1935/2004 regulations regarding the raw materials used and the migration thresholds | Complies with Japanese MHLW Notification 370
● = available | – = not available | empty cells = not tested

[3] More materials and colors on request

S8 SPR | Sprockets

Deep tooth engagement for heavy loads

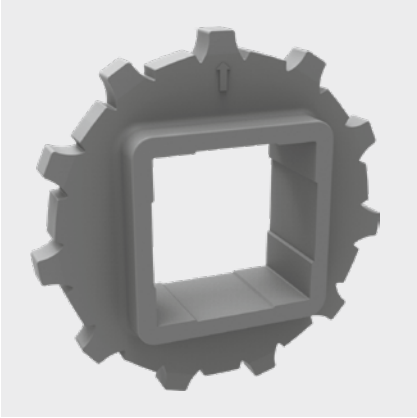

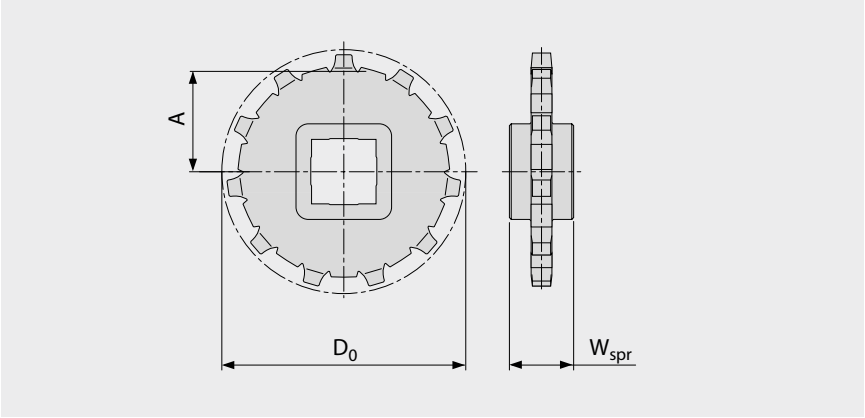

Main dimensions

Sprocket size (Number of teeth)		Z11	Z12	Z15	Z18	Z19	Z22
W_{spr}	mm	25.0	25.0	25.0	25.0	25.0	25.0
	inch	0.98	0.98	0.98	0.98	0.98	0.98
D_0	mm	90.2	99.5	122.7	148.5	155.7	181.2
	inch	3.55	3.92	4.83	5.85	6.13	7.13
A_{max}	mm	39.9	44.5	56.1	69.0	72.6	85.4
	inch	1.57	1.75	2.21	2.72	2.86	3.36
A_{min}	mm	38.3	43.0	54.9	68.0	71.6	84.5
	inch	1.51	1.69	2.16	2.68	2.82	3.33

Shaft bores (● = Round, ■ = Square; ❍ or ❑ = mold to order)

30	mm	●	●	●	●		
40	mm	■	■	● / ■	■	■	
60	mm			■		■	
50	mm						■
80	mm					■	
1	inch		●			●	
1.25	inch		●			●	
1.5	inch	❍ / ■	■	■		■	
2	inch				●		
2.5	inch					■	

Material: PA, Color: LG

LG (Light gray)

All measurements and tolerances apply at 21 °C.
All imperial dimensions (inches) are rounded off.
For detailed sprocket and shaft dimensions see appendix 6.3
Number of sprockets (sprocket spacing distance) see chapter 3.2

S8 SPR-SP | Split Sprockets

Easy assembly without dismounting shaft | Deep tooth engagement for heavy loads

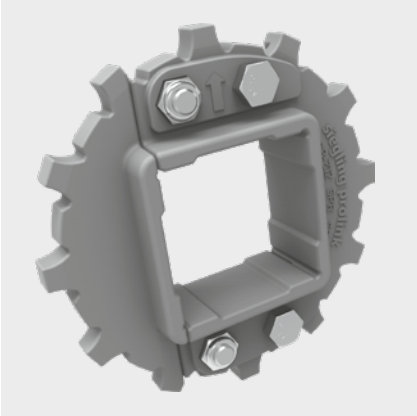

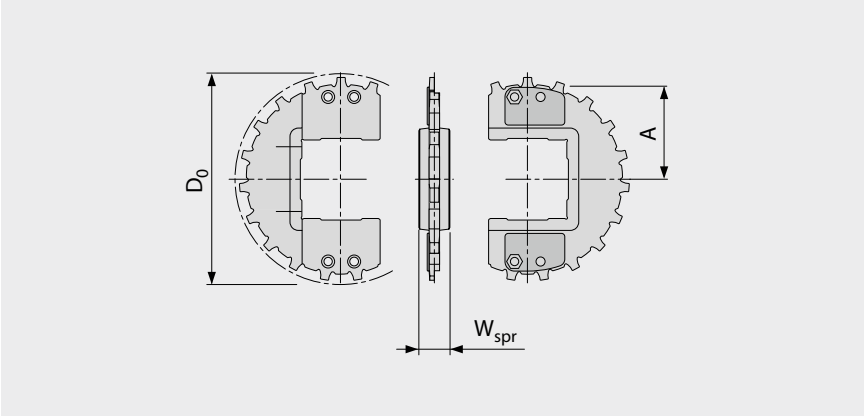

Main dimensions

Sprocket size (Number of teeth)		Z12	Z16	Z19	Z21	Z22
W_{spr}	mm	25.0	25.0	25.0	25.0	25.0
	inch	0.98	0.98	0.98	0.98	0.98
D_0	mm	99.5	132.2	155.7	172.9	181.2
	inch	3.92	5.20	6.13	6.81	7.13
A_{max}	mm	44.5	60.8	72.6	81.3	85.4
	inch	1.75	2.39	2.86	3.20	3.36
A_{min}	mm	43.0	59.7	71.6	80.2	84.5
	inch	1.69	2.35	2.82	3.16	3.33

Shaft bores (● = Round, ■ = Square; ❍ or ❑ = mold to order)

40	mm	■	● / ■	● / ■	■	
60	mm		● / ■	● / ■	■	
90	mm					■
1	inch	●				
1.5	inch	■	● / ■	● / ■	■	
2.5	inch		❍ / ■	● / ■	■	

Standard material: PA, Color: LG
Mold to order: Material: PP, Color: WT

LG (Light gray), WT (White)

All measurements and tolerances apply at 21 °C.
All imperial dimensions (inches) are rounded off.
For detailed sprocket and shaft dimensions see appendix 6.3
Number of sprockets (sprocket spacing distance) see chapter 3.2

S8-0 FLT PMU

Profiles with reinforced base to handle high loads



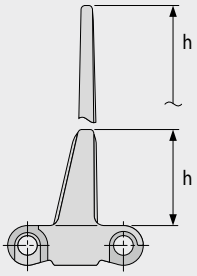

Basic data

Material	Color	Height (h)	
		25.4 mm 1 inch	76 mm 3 inch
POM	BL	●	●
POM-CR	AT	●	●
PP	BL	●	●
PP	LG	●	●
PP	WT	●	●
PA-HT	BK	●	●

Molded width: 152 mm (6.0 in)

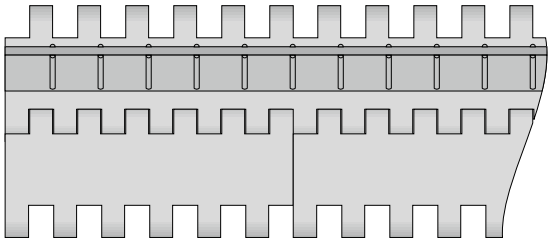

Standard configuration S8-0 FLT PMU

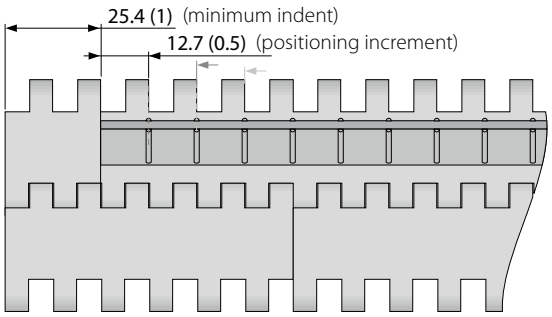

Indent configuration S8-0 FLT PMU

AT (Anthracite), BK (Black), BL (Blue), LG (Light gray), WT (White)

All measurements and tolerances apply at 21 °C; for temperature deviations please see Prolink manual chapter 4.4 "Temperature influence".
All imperial dimensions (inches) are rounded off.
Note: Use of accessory in a belt may impact on the minimum design radii. Please see chapter 6.3 for further information.

S8.1-0 NCL PMU

Highest available Profile for 1 in pitch belts. Extreme impact resistant with reinforced base and rips in TPC1.

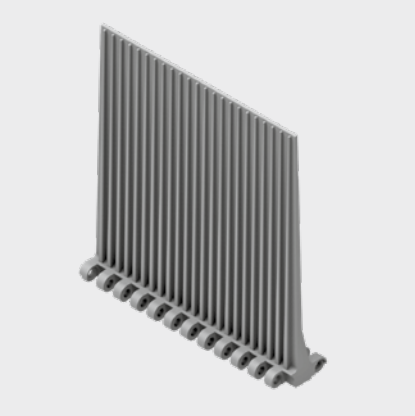

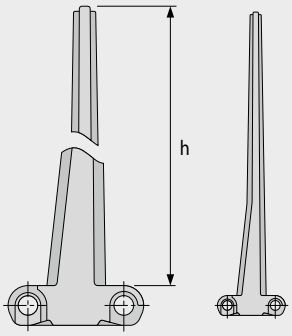

Basic data

Material	Color	Height (h)
		152.4 mm 6 inch
TPC1	LG	●

Molded width: 152 mm (6.0 in)

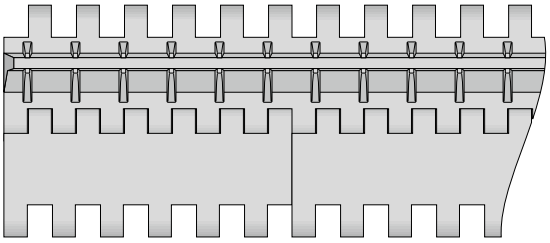

Standard configuration 8.1-0 NCL PMU

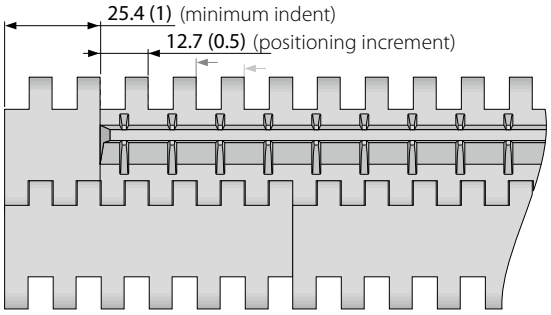

Indent configuration S8.1-0 NCL PMU

LG (Light gray)

All measurements and tolerances apply at 21 °C; for temperature deviations please see Prolink manual chapter 4.4 "Temperature influence".
All imperial dimensions (inches) are rounded off.
Note: Use of accessory in a belt may impact on the minimum design radii. Please see chapter 6.3 for further information.

S8 SG | Side guards

For retention of bulk products (only for modules h_s = 0 mm/in)

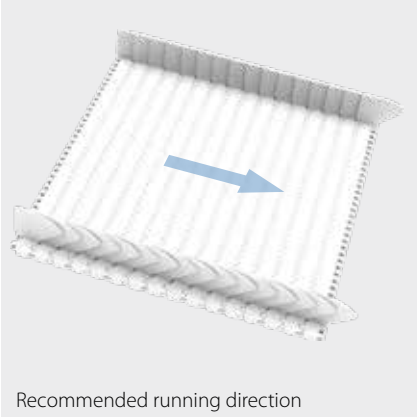
Recommended running direction



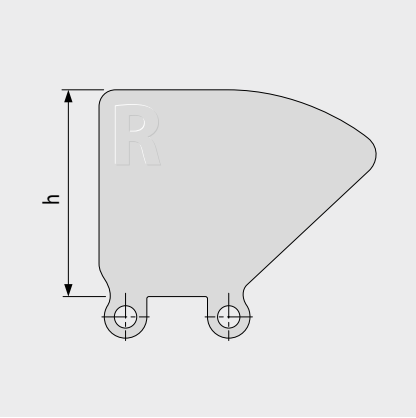

Basic data

Material	Color	Height (h)			
		25 mm 1 inch	50 mm 2 inch	75 mm 3 inch	100 mm 4 inch
PE	LB	●	●	●	●
PE	WT	●	●	●	●
PE-MD	BL	●	●		
PP	LB	●	●	●	●
PP	WT	●	●	●	●

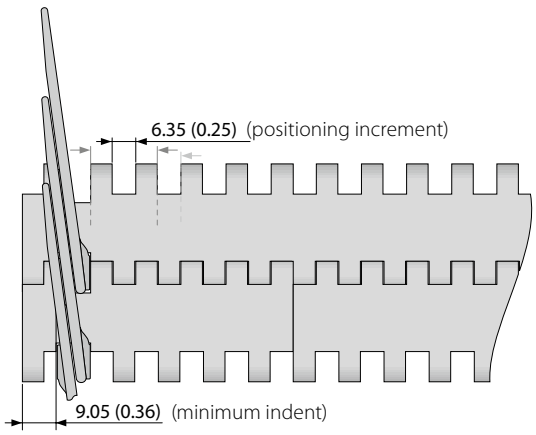

BL (Blue), LB (Light blue), WT (White)

All measurements and tolerances apply at 21 °C; for temperature deviations please see Prolink manual chapter 4.4 "Temperature influence".
All imperial dimensions (inches) are rounded off.
Note: Use of accessory in a belt may impact on the minimum design radii. Please see chapter 6.3 for further information.

S8 HDT | Hold Down Tabs

Used on wider belts to prevent lift an swan neck conveyors | To improve strength, stability and cleanability they are moulded on a narrow module



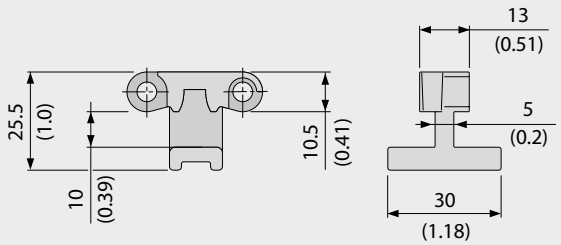

Basic data

Material	Color
POM	BL

Using Hold Down Tabs results in constrains with regards to sprocket and shaft size to ensure sufficient clearance to the shaft (see also chapter 3.3 hold down tabs).

Example

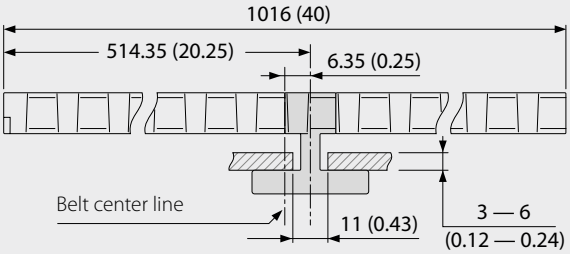

Sprocket options using HDT

Sprocket size (Number of teeth)	Maximum bore round		Maximum bore square	
	[mm]	[inch]	[mm]	[inch]
Z11	40	1.5	30	1.25
Z12	45	1.75	35	1.5
Z15	70	2.75	55	2.0
Z18	95	3.5	70	2.75
Z19	100	3.75	75	3.0

BL (Blue)

All measurements and tolerances apply at 21 °C; for temperature deviations please see Prolink manual chapter 4.4 "Temperature influence".
All imperial dimensions (inches) are rounded off.
Note: Use of accessory in a belt may impact on the minimum design radii. Please see chapter 6.3 for further information.

S8.1 PRR | Pin Retained Rollers

For applications where low back pressure accumulation or product separation is required

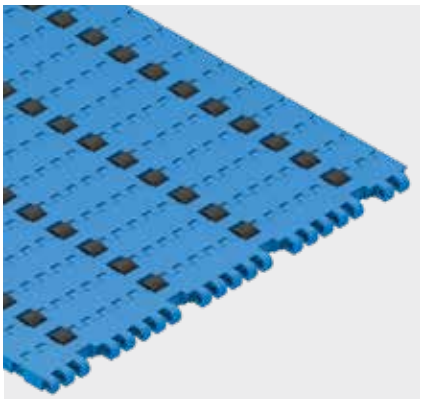

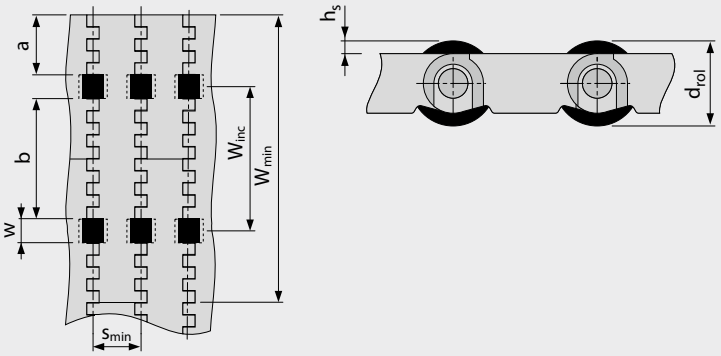

- For low back pressure wearstrips are to be positioned between the rollers
- For product separation the wear-strips are to be positioned below the rollers
- For all materials and surfaces
- Rollers available in POM BK and TPE LG (R10)

Dimensions

w	12.7 mm (0.5 in)	Roller cut out width (roller width 12 mm (0.47 in))
h_s	2.25 mm (0.09 in)	Height of rollers above surface
d_{rol}	15 mm (0.59 in)	Roller diameter
a	31.75 mm (1.25 in)	Minimum indent
b	63.5 mm (2.5 in)	Standard distance between rollers across belt width
s	n x s_{min}	Roller spacing in travel direction (standard: n = 1)
s_{min}	25.4 mm (1.0 in)	Min. roller spacing in travel direction
W_{inc}	76.2 mm (3.0 in)	Width increment
W_{min}	152.4 mm (6.0 in)	Min. belt width
W_B		Belt width
n_{rol}		Number of rollers across belt width

Allowable belt pull

To determine admissible belt pull calculate effective belt width $W_{B,ef}$ by

$W_{B,ef} = W_B - (w \times n_{rol})$

Example: W_B = 228.6 mm (9.0 in); w = 12.7 mm (0.5 in); n_{rol} = 3

$W_{B,ef}$ = 228.6 – (12.7 x 3) = 190.5 mm

$W_{B,ef}$ = 9.0 – (0.5 x 3) = 7.5 in

Note: Sprocket must not be placed inline with rollers. Deviation in roller spacing possible, please get in contact to customer service. Coefficient of friction between belt and conveyed product in accumulation mode μ_{acc} = 0.04, I.e. the accumulation pressure is approx. 4 % of the weight of the backed up product.

All measurements and tolerances apply at 21 °C; for temperature deviations please see Prolink manual chapter 4.4 “Temperature influence“.
All imperial dimensions (inches) are rounded off.
Note: Use of accessory in a belt may impact on the minimum design radii. Please see chapter 6.3 for further information.

siegling prolink
modular belts

SERIES 9

Side flexing and spiral belts
Pitch 50 mm (1.97 in)

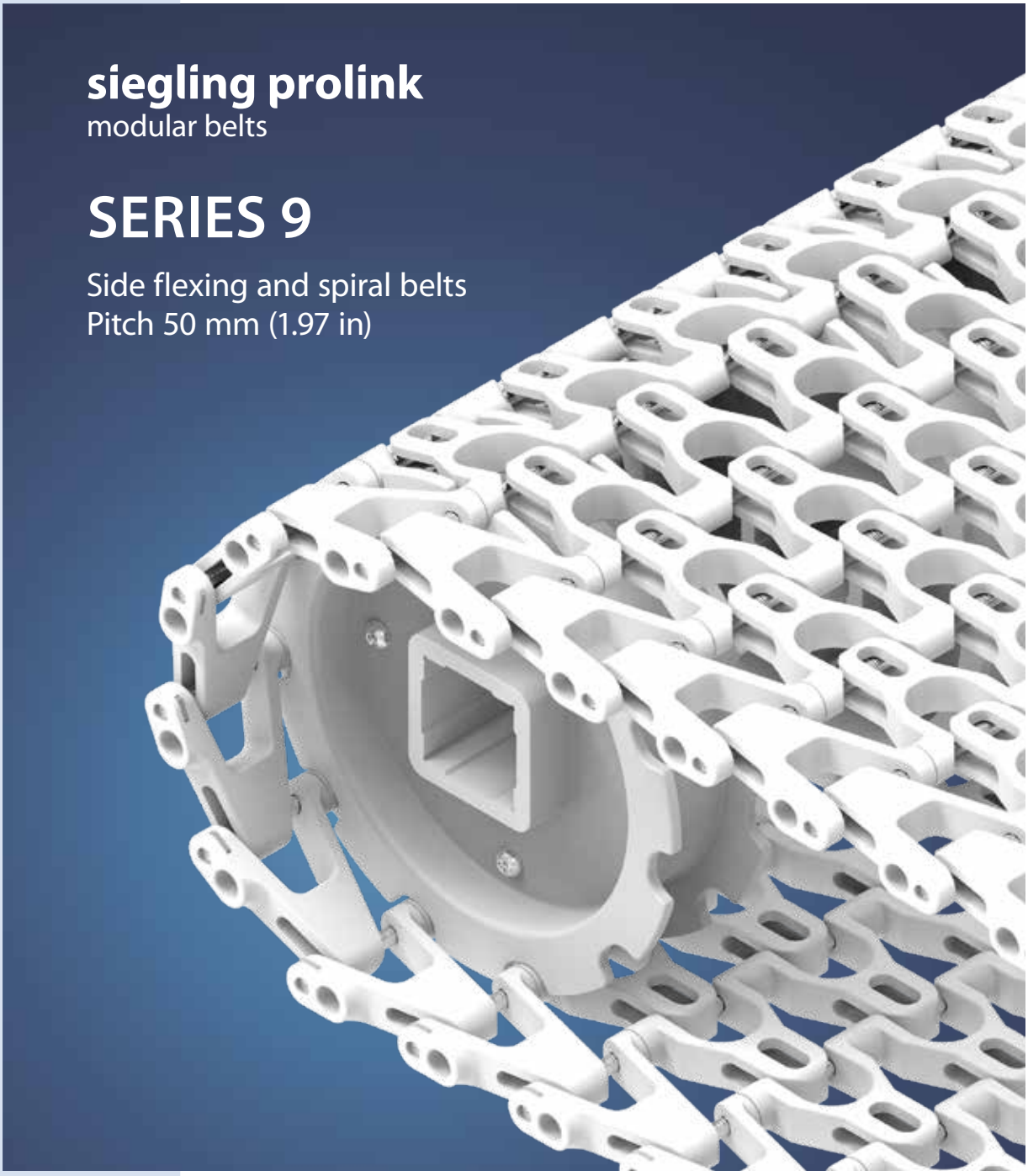

SERIES 9 | **OVERVIEW**

Side flexing and spiral belts | Pitch 50 mm (1.97 in)

Belts for medium to heavy-duty food and non-food applications

Side view scale 1:1

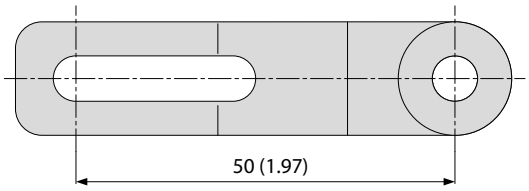

Design characteristics

- Suitable for both straight and radius conveying
- 57 % open area for excellent air circulation and drainage
- Stainless steel hinge pins for high load capacity, lateral stiffness, less belt supports and minimum belt lifting in curves
- No potential belt edge catch points due to safe fixing of hinge pin

Basic data

Pitch	50 mm (1.97 in)
Belt width min.	100 mm (3.9 in)
Width increments	50 mm (1.97 in)
Hinge pins	6 mm (0.24 in) made of stainless steel

Available surface pattern and opening area

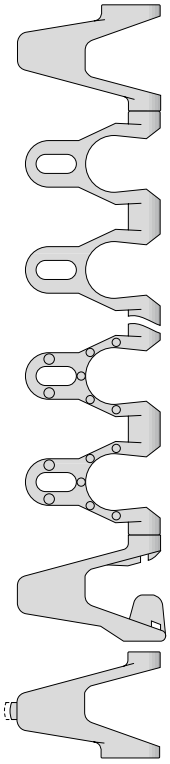

S9-57 GRT
Open (57 %), lattice-shaped surface

S9-57 NTP
Open (57 %), lattice-shaped surface with nub top

Guided belts

Longer side modules

Attention:
Due to the very large surface openings, personnel must be instructed not to place their fingers in or on this belt.

Sprockets
in different sizes with round or square bore



Profiles
in different heights and designs for inclines



Side guards
in different heights for retention of bulk products



Self stacker
in different heights for spiral applications



S9-57 GRT | 57 % Opening | Grid top

Open area (57 %) for excellent air circulation and drainage | 31 % contact area (Largest opening: Ø = 24.3 mm/0.96 in) | Lattice-shaped surface | Collapse factor (C_C) = 1.8

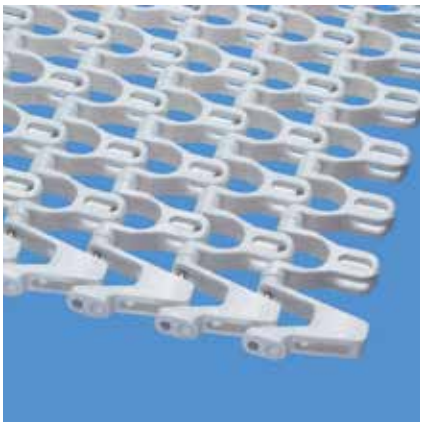

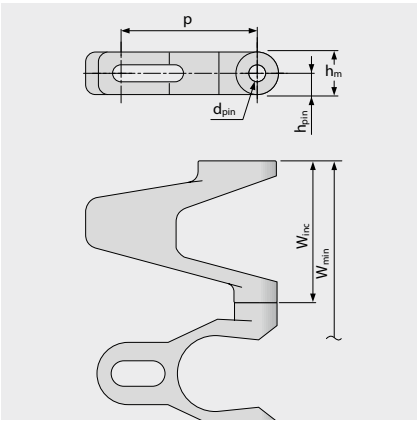

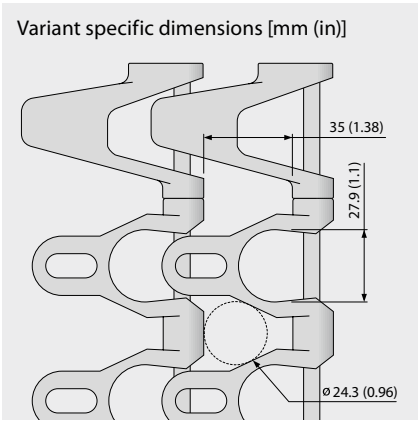

Belt dimensions

	p	d_{pin}	h_m	h_{pin}	h_s	W_{min}	W_{inc}	W_{tol}	Minimum flex radii[1]				
	Pitch	Pin Ø	Thickness	Pin position	Height	Width min.	Width Increment	Width tolerance [%]	r1 $C_c \times W_B$	r2	r3	r4	r5
mm	50.0	6.0	15.0	7.5	0.0	150.0	50.0	±0.3	1.8 x W_B	50.0	100.0	150.0	50.0
inch	1.97	0.24	0.59	0.3	0.0	5.91	1.97	±0.3	1.8 x W_B	1.97	3.94	5.91	1.97

W_B = Belt width, further information regarding r1 see page III-31

Available standard materials [3]

Belt		Pin	Nominal belt pull, straight		Nominal belt pull, curve		Weight		Width deviation	Temperature		Certificates[2]		
Material	Color	Material	[N/mm]	[lb/ft]	[N]	[lb]	[kg/m²]	[lb/ft²]	[%]	[°C]	[°F]	FDA	EU	MHLW
PA*	BL	SS	24	1645	2240	504	11.3	2.31	0.0	-40/120	-40/248	●	●	●
PE	WT	SS	12	822	NR	NR	9.5	1.95	0.0	-70/65	-94/149	●	●	●
POM-CR	UC	SS	30	2056	2800	629	11.5	2.36	0.0	-45/90	-49/194	●	●	●
POM-CR	LG	SS	30	2056	2800	629	11.5	2.36	0.0	-45/90	-49/194	●	●	●
POM-CR	DB	SS	30	2056	2800	629	11.5	2.36	0.0	-45/90	-49/194	●	●	●
PP	WT	SS	22	1507	1600	360	9.3	1.9	0.0	5/100	41/212	●	●	●
PP	LG	SS	22	1507	1600	360	9.3	1.9	0.0	5/100	41/212	●	●	●

NR = not recommended

* Values valid for dry applications (RH <50 %). Belts in PA material will absorb water in wet environments, causing them to expand and reduce the nominal belt pull capacity.

Attention! Due to the very large surface openings, personnel must be instructed not to place their fingers in or on this belt.

DB (Dark blue), LG (Light gray), WT (White), UC (Uncolored)

All measurements and tolerances apply at 21 °C; for temperature deviations please see Prolink manual chapter 4.4 "Temperature influence".
All imperial dimensions (inches) are rounded off.

[1] Flex radii: r1 = side flex, r2 = front flex on roller, r3 = back flex on load bearing roller, r4 = back flex on Hold Down shoe, r5 = back flex on roller

[2] Complies with FDA 21 CFR | Complies with (EU) 10/2011 and (EC) 1935/2004 regulations regarding the raw materials used and the migration thresholds | Complies with Japanese MHLW Notification 370
● = available | – = not available | empty cells = not tested

[3] More materials and colors on request

S9-57 NTP | 57 % Opening | Nub top (round studs)

Open area (57 %) for excellent air circulation and drainage | Lattice-shaped surface with 3.0 mm (0.12 in) high round studs 4 % contact area (Largest opening: Ø = 24.3 mm/0.96 in) | Nub top surface for increased grip and reduced contact area for good release | Collapse factor (C_C) = 1.8

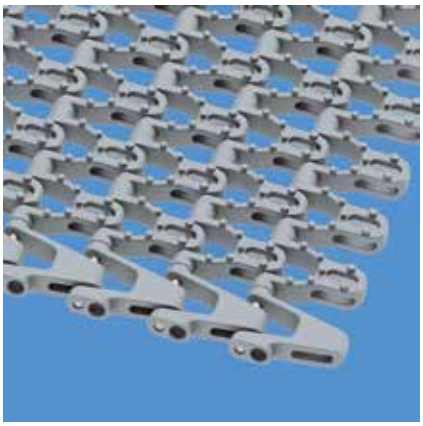

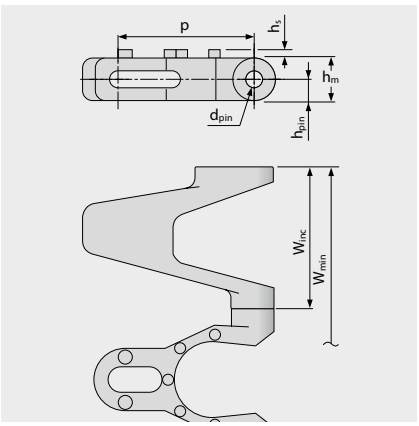

Variant specific dimensions [mm (in)]

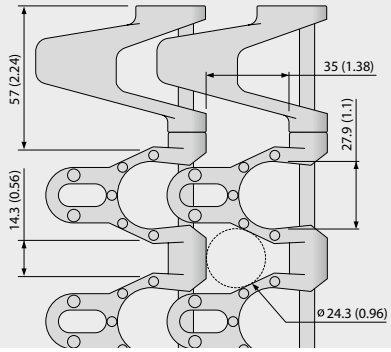

Belt dimensions

	p	d_{pin}	h_m	h_{pin}	h_s	W_{min}	W_{inc}	W_{tol}	Minimum flex radii[1]				
	Pitch	Pin Ø	Thickness	Pin position	Height	Width min.	Width Increment	Width tolerance [%]	r1 $C_c \times W_B$	r2	r3	r4	r5
mm	50.0	6.0	15.0	7.5	3.0	150.0	50.0	±0.3	1.8 x W_B	50.0	100.0	150.0	50.0
inch	1.97	0.24	0.59	0.3	0.12	5.91	1.97	±0.3	1.8 x W_B	1.97	3.94	5.91	1.97

W_B = Belt width, further information regarding r1 see page III-31

Mold to order belts [3]

Belt		Pin	Nominal belt pull, straight		Nominal belt pull, curve		Weight		Width deviation	Temperature		Certificates[2]		
Material	Color	Material	[N/mm]	[lb/ft]	[N]	[lb]	[kg/m²]	[lb/ft²]	[%]	[°C]	[°F]	FDA	EU	MHLW
PE		SS	12	822	NR	NR	9.7	1.99	0.0	-70/65	-94/149			
POM-CR		SS	30	2056	2800	629	11.7	2.4	0.0	-45/90	-49/194			
PP	LG	SS	22	1507	1600	360	9.4	1.93	0.0	5/100	41/212	●	●	●

NR = not recommended

Attention! Due to the very large surface openings, personnel must be instructed not to place their fingers in or on this belt.

LG (Light gray)

All measurements and tolerances apply at 21 °C; for temperature deviations please see Prolink manual chapter 4.4 "Temperature influence".
All imperial dimensions (inches) are rounded off.

[1] Flex radii: r1 = side flex, r2 = front flex on roller, r3 = back flex on load bearing roller, r4 = back flex on Hold Down shoe, r5 = back flex on roller

[2] Complies with FDA 21 CFR | Complies with (EU) 10/2011 and (EC) 1935/2004 regulations regarding the raw materials used and the migration thresholds | Complies with Japanese MHLW Notification 370
● = available | – = not available | empty cells = not tested

[3] More materials and colors on request

S9-57 GRT G | 57 % Opening | Grid top · guided

Open area (57 %) for excellent air circulation and drainage | 31 % contact area (Largest opening: Ø = 24.3 mm/0.96 in) | Lattice-shaped surface | Guided version (G) allows utilization of the entire belt width | Collapse factor (C_c) = 1.8

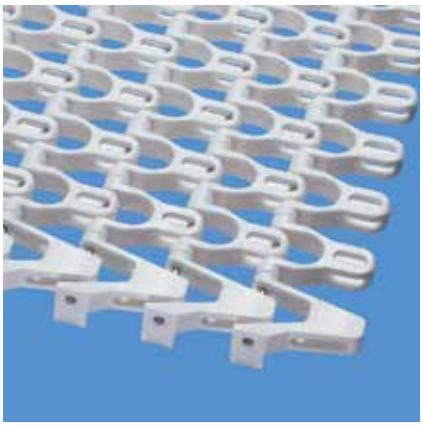

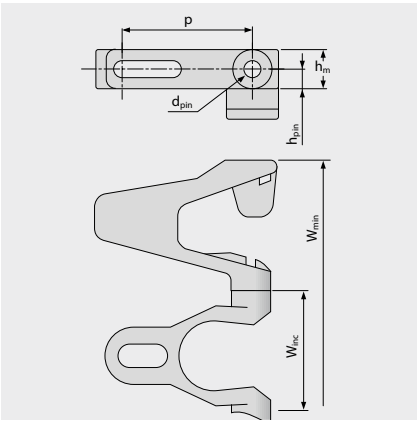

Variant specific dimensions [mm (in)]

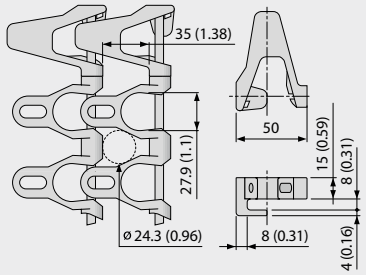

Belt dimensions

	p	d_{pin}	h_m	h_{pin}	h_s	W_{min}	W_{inc}	W_{tol}	Minimum flex radii[1]				
	Pitch	Pin Ø	Thickness	Pin position	Height	Width min.	Width Increment	Width tolerance [%]	r1 $C_c \times W_B$	r2	r3	r4	r5
mm	50.0	6.0	15.0	7.5	0.0	150.0	50.0	±0.3	1.8 x W_B	50.0	100.0	150.0	50.0
inch	1.97	0.24	0.59	0.3	0.0	5.91	1.97	±0.3	1.8 x W_B	1.97	3.94	5.91	1.97

W_B = Belt width, further information regarding r1 see page III-31

Available standard materials [3]

Belt		Pin	Nominal belt pull, straight		Nominal belt pull, curve		Weight		Width deviation	Temperature		Certificates[2]		
Material	Color	Material	[N/mm]	[lb/ft]	[N]	[lb]	[kg/m²]	[lb/ft²]	[%]	[°C]	[°F]	FDA	EU	MHLW
POM-CR	UC	SS	30	2056	2800	629	11.5	2.36	0.0	-45/90	-49/194	●	●	●
PP	WT	SS	22	1507	1600	360	9.3	1.9	0.0	5/100	41/212	●	●	●
Mold to order belts														
PE		SS	12	822	NR	NR	9.5	1.95	0.0	-70/65	-94/149			

NR = not recommended

Attention! Due to the very large surface openings, personnel must be instructed not to place their fingers in or on this belt.

☐ WT (White), ☐ UC (Uncolored)

All measurements and tolerances apply at 21 °C; for temperature deviations please see Prolink manual chapter 4.4 "Temperature influence".
All imperial dimensions (inches) are rounded off.

[1] Flex radii: r1 = side flex, r2 = front flex on roller, r3 = back flex on load bearing roller, r4 = back flex on Hold Down shoe, r5 = back flex on roller

[2] Complies with FDA 21 CFR | Complies with (EU) 10/2011 and (EC) 1935/2004 regulations regarding the raw materials used and the migration thresholds | Complies with Japanese MHLW Notification 370
● = available | – = not available | empty cells = not tested

[3] More materials and colors on request

S9-57 NTP G | 57 % Opening | Nub top (round studs) · guided

Open area (57 %) for excellent air circulation and drainage | With round studs for increased grip (4 % contact area, largest opening: Ø = 24.3 mm/0.96 in) | Guided version (G) allows utilization of the entire belt width | Collapse factor (C_C) = 1.8

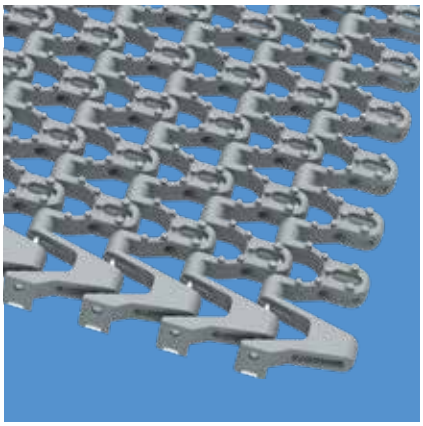

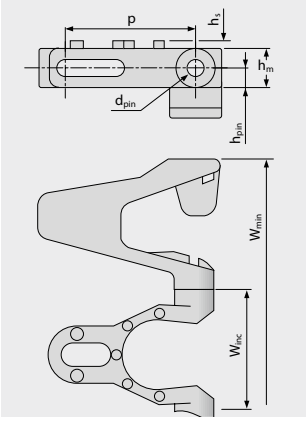

Variant specific dimensions [mm (in)]

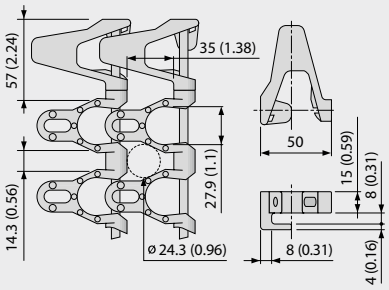

Belt dimensions

	p	d_{pin}	h_m	h_{pin}	h_s	W_{min}	W_{inc}	W_{tol}	Minimum flex radii[1]				
	Pitch	Pin Ø	Thickness	Pin position	Height	Width min.	Width Increment	Width tolerance [%]	r1 $C_c \times W_B$	r2	r3	r4	r5
mm	50.0	6.0	15.0	7.5	3.0	150.0	50.0	±0.3	1.8 x W_B	50.0	100.0	150.0	50.0
inch	1.97	0.24	0.59	0.3	0.12	5.91	1.97	±0.3	1.8 x W_B	1.97	3.94	5.91	1.97

W_B = Belt width, further information regarding r1 see page III-31

Mold to order belts [3]

Belt		Pin	Nominal belt pull, straight		Nominal belt pull, curve		Weight		Width deviation	Temperature		Certificates[2]		
Material	Color	Material	[N/mm]	[lb/ft]	[N]	[lb]	[kg/m²]	[lb/ft²]	[%]	[°C]	[°F]	FDA	EU	MHLW
PE		SS	12	822	NR	NR	9.7	1.99	0.0	-70/65	-94/149			
POM-CR		SS	30	2056	2800	629	11.7	2.40	0.0	-45/90	-49/194			
PP	LG	SS	22	1507	1600	360	9.4	1.93	0.0	5/100	41/212	●	●	●

NR = not recommended

Attention! Due to the very large surface openings, personnel must be instructed not to place their fingers in or on this belt.

LG (Light gray)

All measurements and tolerances apply at 21 °C; for temperature deviations please see Prolink manual chapter 4.4 "Temperature influence".
All imperial dimensions (inches) are rounded off.

[1] Flex radii: r1 = side flex, r2 = front flex on roller, r3 = back flex on load bearing roller, r4 = back flex on Hold Down shoe, r5 = back flex on roller

[2] Complies with FDA 21 CFR | Complies with (EU) 10/2011 and (EC) 1935/2004 regulations regarding the raw materials used and the migration thresholds | Complies with Japanese MHLW Notification 370
● = available | – = not available | empty cells = not tested

[3] More materials and colors on request

S9-57 GRT F2, F3, F4, F5, F6, F7, F8 | 57 % Opening

Open area (57 %) for excellent air circulation and drainage (Largest opening: Ø = 24.3 mm/0.96 in) | Special edge modules with noses (F2 –F8) of varying size ensure smooth belt operation when the system turn radius is greater than the minimum belt turn radius | Collapse factor (C_c) = 2.12 – 5.50

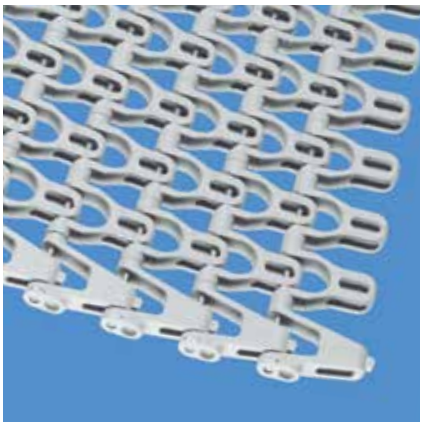

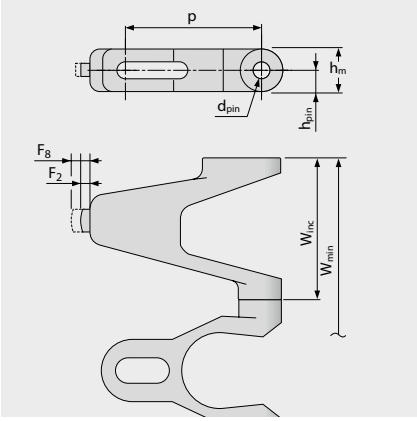

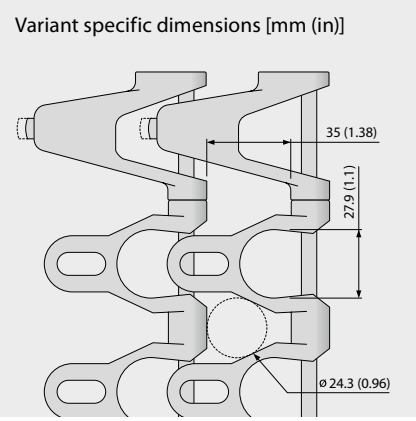

Belt dimensions

	p	d_{pin}	h_m	h_{pin}	h_s	W_{min}	W_{inc}	W_{tol}	Minimum flex radii[1]			
	Pitch	Pin Ø	Thickness	Pin position	Height	Width min.	Width Increment	Width tolerance [%]	r1 C_c x W_B	r2	r3	r4	r5
mm	50.0	6.0	15.0	7.5	0.0	150.0	50.0	±0.3	C_C x W_B	50.0	100.0	150.0	50.0
inch	1.97	0.24	0.59	0.3	0.0	5.91	1.97	±0.3	C_C x W_B	1.97	3.94	5.91	1.97

W_B = Belt width. C_C see table below

Mold to order belts [3]

Belt		Pin	Nominal belt pull, straight		Nominal belt pull, curve		Weight		Width deviation	Temperature		Certificates[2]		
Material	Color	Material	[N/mm]	[lb/ft]	[N]	[lb]	[kg/m²]	[lb/ft²]	[%]	[°C]	[°F]	FDA	EU	MHLW
PE		SS	12	822	NR	NR	9.5	1.95	0.0	-70/65	-94/149			
POM-CR	UC	SS	30	2056	2800	629	11.5	2.36	0.0	-45/90	-49/194	●	●	●
PP		SS	22	1507	1600	360	9.3	1.9	0.0	5/100	41/212			

Module variants

Module	F2	F3	F4	F5	F6	F7	F8
C_C	2.12	2.40	2.65	3.0	3.68	4.58	5.50

For further information see chapter 3.3 (paragraph spiral conveyors)

Attention! Due to the very large surface openings, personnel must be instructed not to place their fingers in or on this belt.

UC (Uncolored)

All measurements and tolerances apply at 21 °C; for temperature deviations please see Prolink manual chapter 4.4 "Temperature influence".
All imperial dimensions (inches) are rounded off.

[1] Flex radii: r1 = side flex, r2 = front flex on roller, r3 = back flex on load bearing roller, r4 = back flex on Hold Down shoe, r5 = back flex on roller

[2] Complies with FDA 21 CFR | Complies with (EU) 10/2011 and (EC) 1935/2004 regulations regarding the raw materials used and the migration thresholds | Complies with Japanese MHLW Notification 370
● = available | – = not available | empty cells = not tested

[3] More materials and colors on request

S9 SPR | Sprockets

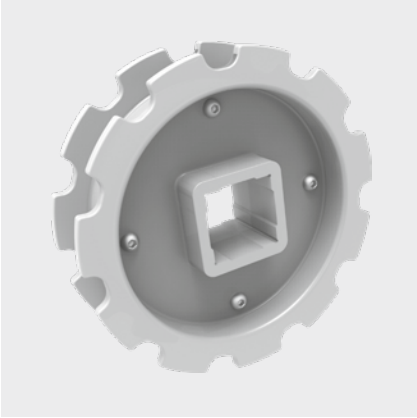

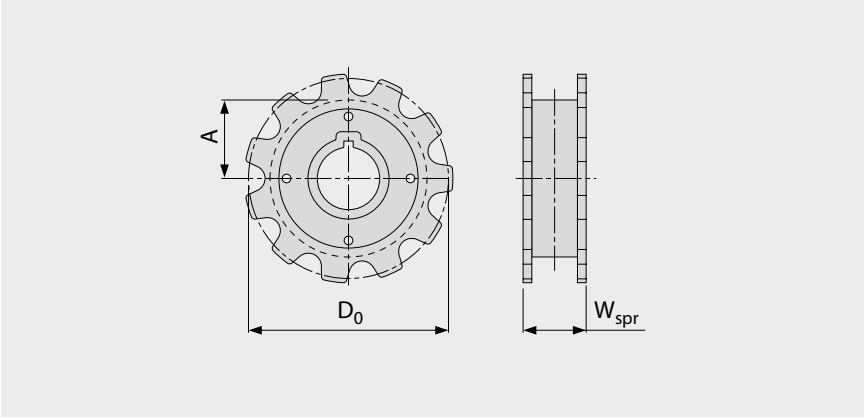

Main dimensions

Sprocket size (Number of teeth)		Z11
W_{spr}	mm	49.0
	inch	1.93
D_0	mm	178.8
	inch	7.04
A_{max}	mm	81.9
	inch	3.22
A_{min}	mm	77.4
	inch	3.05

Shaft bores (● = Round, ■ = Square; ❍ or ❑ = mold to order)

40	mm	● / ■
1.5	inch	❑

Material: POM, Color: UC

UC (Uncolored)

All measurements and tolerances apply at 21 °C.
All imperial dimensions (inches) are rounded off.
For detailed sprocket and shaft dimensions see appendix 6.3
Number of sprockets (sprocket spacing distance) see chapter 3.2

S9-57 GRT PMC

Open version (57 %) base module for drainage

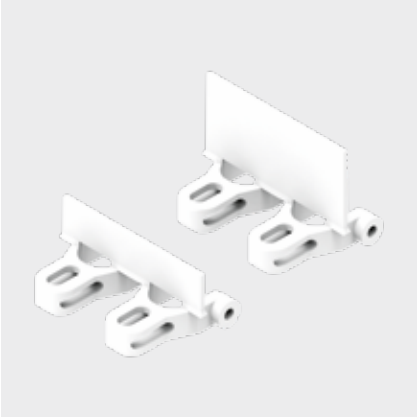

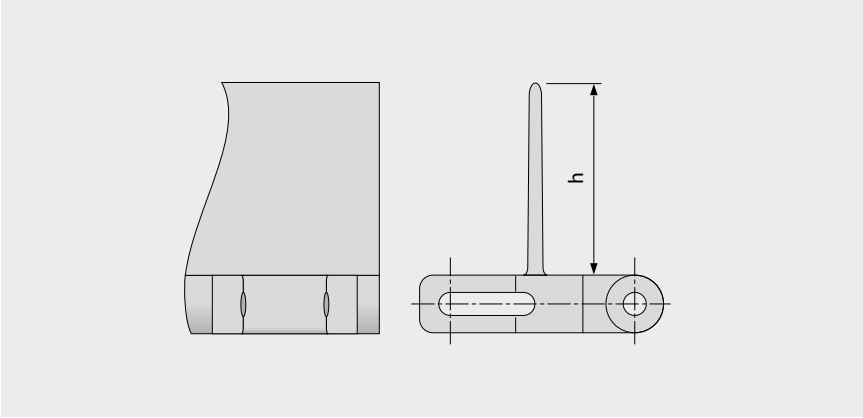

Basic data

Material	Color	Height (h)	
		25 mm 1 inch	50 mm 2 inch
POM	UC	mold to order	●
PP	WT	●	mold to order

Molded width: 100 mm (3.9 in)

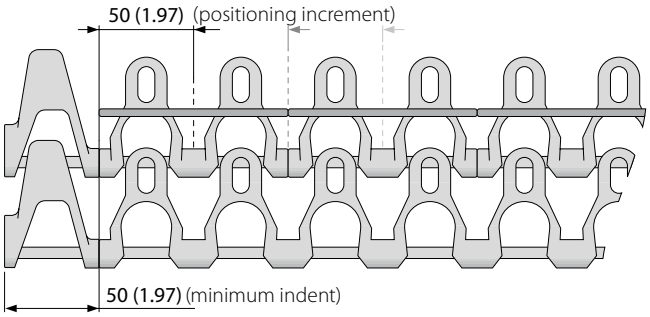

Attention! Due to the very large surface openings, personnel must be instructed not to place their fingers in or on this belt.

☐ UC (Uncolored), ☐ WT (White)

All measurements and tolerances apply at 21 °C; for temperature deviations please see Prolink manual chapter 4.4 "Temperature influence".
All imperial dimensions (inches) are rounded off.
Note: Use of accessory in a belt may impact on the minimum design radii. Please see chapter 6.3 for further information.

S9 SG | Side guards

For retention of bulk products | Collapse factor (C_c) = 1.8

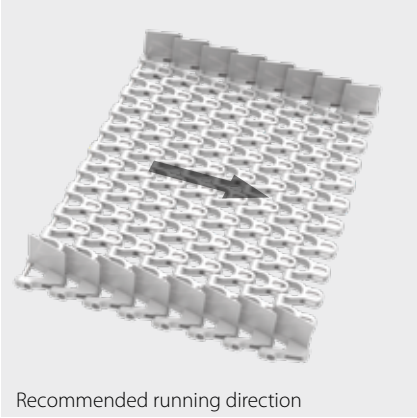

Recommended running direction



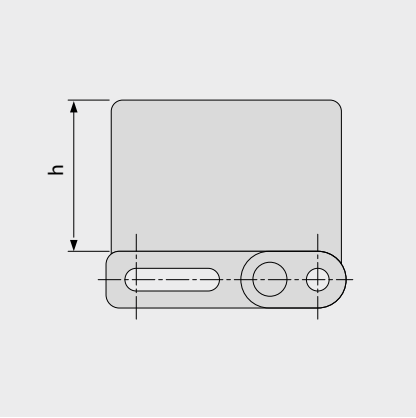

Basic data

Material	Color	Height (h)	
		25 mm 1 inch	50 mm 2 inch
POM-CR	UC	●	●

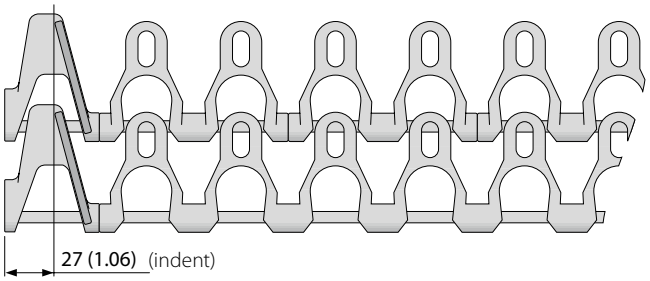

Attention! Due to the very large surface openings, personnel must be instructed not to place their fingers in or on this belt.

UC (Uncolored)

All measurements and tolerances apply at 21 °C; for temperature deviations please see Prolink manual chapter 4.4 "Temperature influence".
All imperial dimensions (inches) are rounded off.
Note: Use of accessory in a belt may impact on the minimum design radii. Please see chapter 6.3 for further information.

S9 SSL/R | Self Stacker

For spiral applications with limited space in height (SSL/R at curve inside/cage)

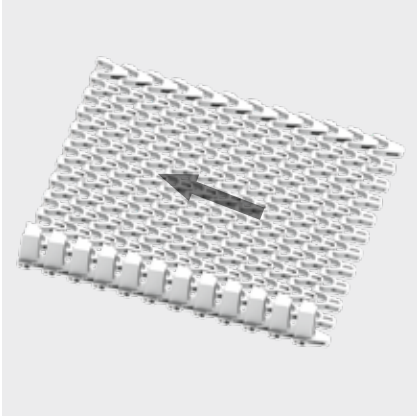

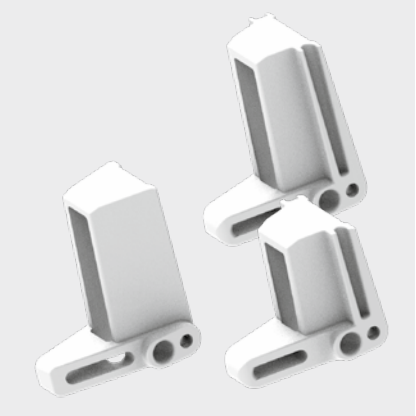

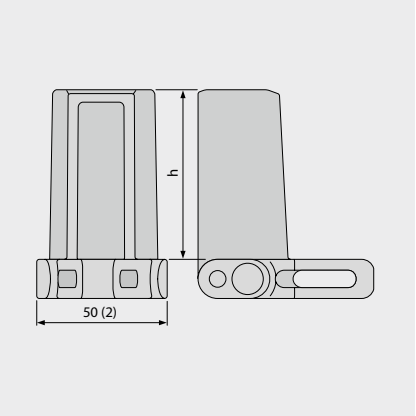

Basic data

Material	Color	Height (h)	
		45 mm 1.8 inch	65 mm 2.6 inch
POM-CR	UC	●	●

Side flexing (F x W_B)		
Belt width [mm]	Factor 1.8	Factor 1.6*
< 300	1.6	1.4
300 – 800	1.7	1.5
> 800	1.8	1.6

* 1.6 only in H65 mm available

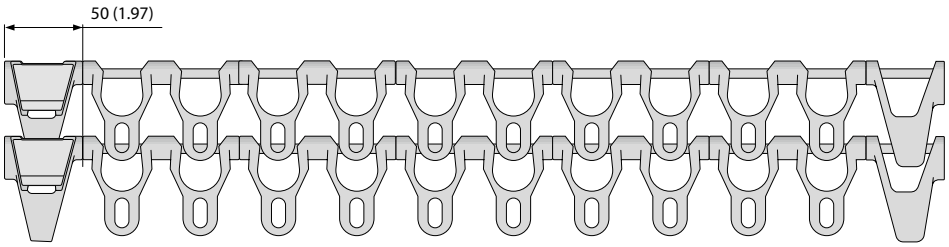

UC (Uncolored)

All measurements and tolerances apply at 21 °C; for temperature deviations please see Prolink manual chapter 4.4 "Temperature influence".
All imperial dimensions (inches) are rounded off.
Note: Use of accessory in a belt may impact on the minimum design radii. Please see chapter 6.3 for further information.

SERIES 9 | **INSTALLATION NOTES**

Side flexing and spiral belt | Pitch 50 mm (1.97 in)

Preferred travel direction

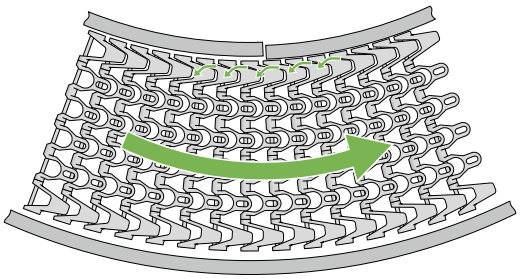

Curve conveyor

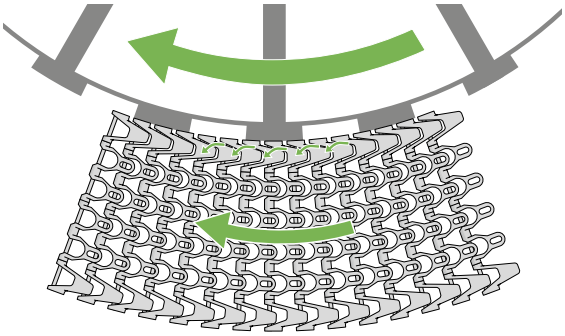

Cage driven spiral

Curve direction S9 -> CW (ClockWise) and CCW (Counter ClockWise)

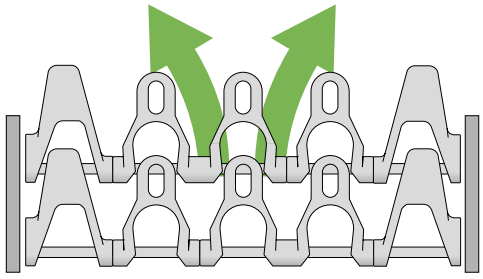

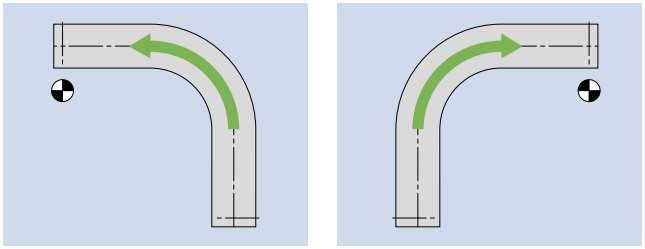

Curve direction S9 – Spiral application-> CW (ClockWise) and CCW (Counter ClockWise)

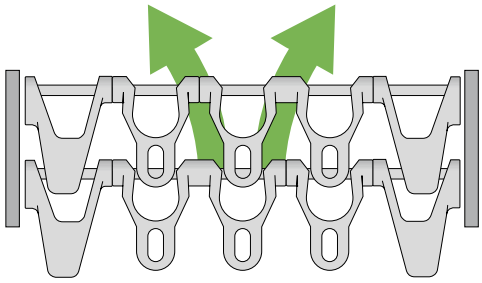

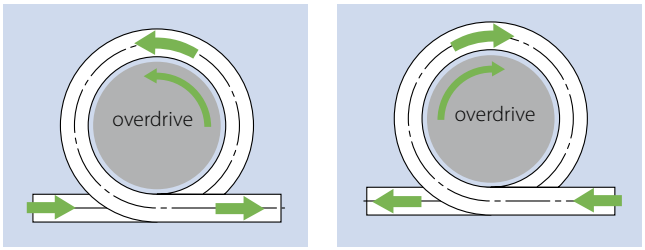

Sprocket position

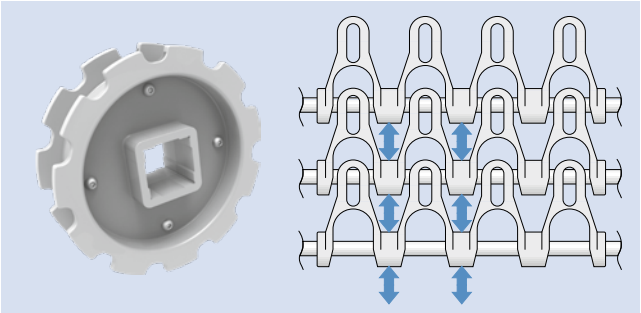

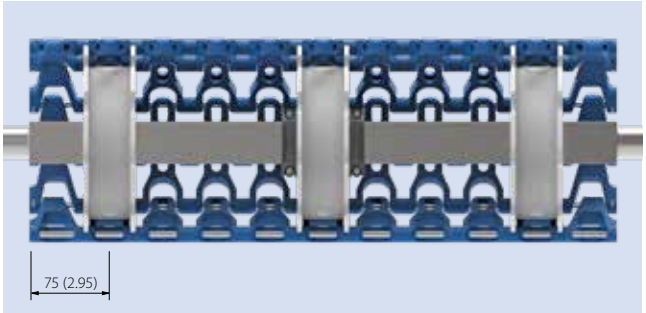



Further information in chapter 3 and 5

MOVEMENT SYSTEMS

siegling prolink
modular belts

SERIES 9.1

Side flexing and spiral belts
Pitch 50 mm (1.97 in)



Belts for medium to heavy-duty food and non-food applications

Side view scale 1:1

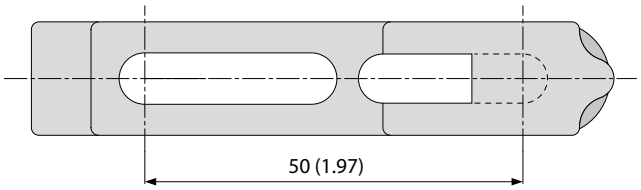

Available surface pattern and opening area

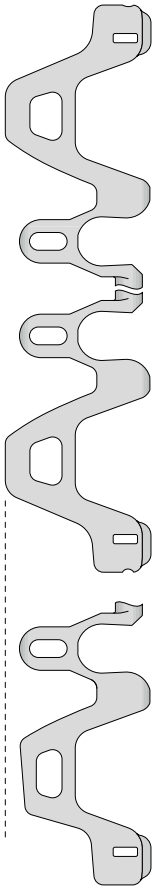

S9.1-57 GRT SMU
Open area (57%),
with grid top

S9.1-57 GRT SMT
Open area (57%), grid top
Can be used on the inner radius
to decrease the collapse factor

Design characteristics

- Can be used in spiral towers with cage drives and for straight and radius conveying
- Strong side modules in a brick-laid pattern for exeptional tensile load
- Hinge pins with clip-free attachment
- Stainless steel hinge pins for high load capacity, lateral stiffness, less belt supports and minimum belt lifting in curves
- Adjustable collapse factor of 1.3 – 2.9

Basic data

Pitch	50 mm (1.97 in)
Belt width min.	350 mm (13.78 in)
Width increments	50 mm (1.97 in)
Hinge pins	6 mm (0.24 in) made of stainless steel

Attention:
Due to the very large surface openings, personnel must be instructed not to place their fingers in or on this belt.

Sprockets

Single row with round or square bore (for spiral towers with cage drives)

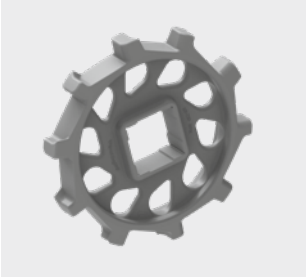

Double row with round or square bore



S9.1-57 GRT (CW/CCW) | 57 % Opening | Grid top

Spiral belt | Open area (57 %) for excellent air circulation and drainage | Contact area 31 % (Largest opening: Ø = 24 mm/ 0.94 in) | Lattice-shaped surface | Clip-free hinge pin fitting | Special edge modules (SMT) on the inner radius make the collapse factor adjustable (C_C = 1.3 – 2.9) and ensure smooth conveying

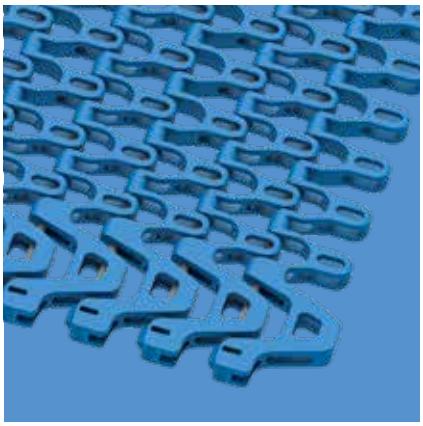

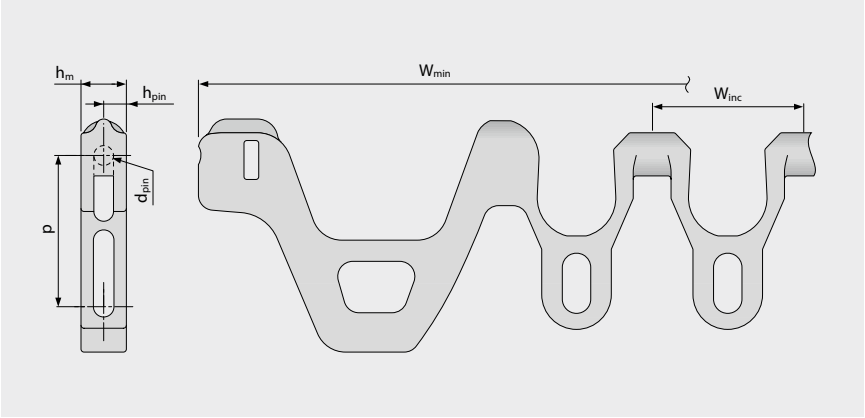

Belt dimensions

	p	d_{pin}	h_m	h_{pin}	h_s	W_{min}	W_{inc}	W_{tol}	Minimum flex radii[1]			
	Pitch	Pin Ø	Thickness	Pin position	Height	Width min.	Width Increment	Width tolerance [%]	r1 C_C x W_B	r2	r3	r4	r5
mm	50.0	6.0	15.0	7.5	0.0	350.0	50.0	±0.3	C_C x W_B	50.0	100.0	150.0	50.0
inch	1.97	0.24	0.59	0.3	0.0	13.78	1.97	±0.3	C_C x W_B	1.97	3.94	5.91	1.97

W_B = Belt width. C_C see table on the following page

Available standard materials [3]

Belt		Pin	Nominal belt pull, straight		Nominal belt pull, curve		Weight		Width deviation	Temperature		Certificates[2]		
Material	Color	Material	[N/mm]	[lb/ft]	[N]	[lb]	[kg/m²]	[lb/ft²]	[%]	[°C]	[°F]	FDA	EU	MHLW
PA	BL	SS	24	1645	2000	450	11.3	2.31	0.27	-40/120	-40/248	●	●	●
POM-CR	BL	SS	30	2056	2800	629	11.5	2.36	0.0	-45/90	-49/194	●	●	●

More design information available in Chapter 3.3 and 5.2.

Attention! Due to the very large surface openings, personnel must be instructed not to place their fingers in or on this belt.

BL (Blue)

All measurements and tolerances apply at 21 °C; for temperature deviations please see Prolink manual chapter 4.4 "Temperature influence".
All imperial dimensions (inches) are rounded off.

[1] Flex radii: r1 = side flex, r2 = front flex on roller, r3 = back flex on load bearing roller, r4 = back flex on Hold Down shoe, r5 = back flex on roller

[2] Complies with FDA 21 CFR | Complies with (EU) 10/2011 and (EC) 1935/2004 regulations regarding the raw materials used and the migration thresholds | Complies with Japanese MHLW Notification 370

● = available | – = not available | empty cells = not tested

[3] More materials and colors on request

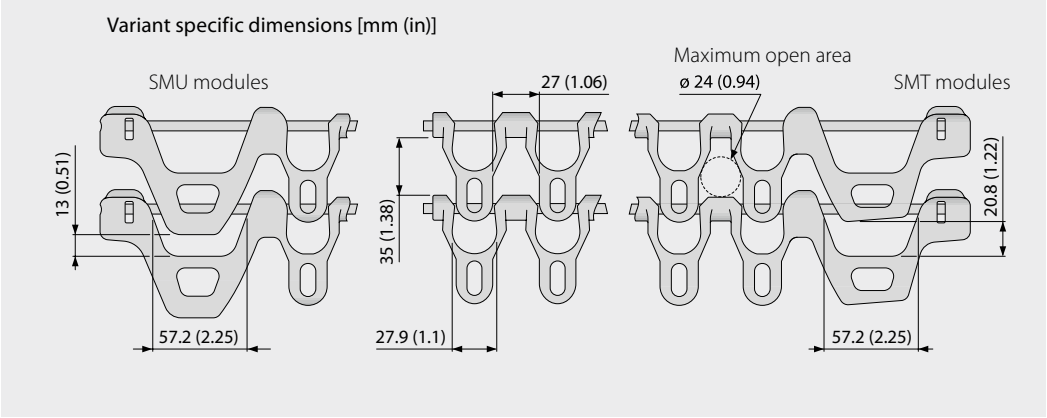

Module distribution on the inner radius for various collapse factors

S9.1 Collapse factor	Belt edge structure on the inner radius (row #)										% on the inner	
	1	2	3	4	5	6	7	8	9	10	% SMU	% SMT
1.3											0	100
1.4											10	90
1.5											20	80
1.6											25	75
1.7											33.33	66.67
1.8											40	60
1.9											50	50
2.1											60	40
2.2											66.66	33.34
2.4											75	25
2.5											80	20
2.7											90	10
2.9											100	0

Color Code for POM-CR material:

- S9.1 SMT (Side Module Tight)
- S9.1 SMU (Side Module Universal)

Color Code for PA material:

- S9.1 SMT (Side Module Tight)
- S9.1 SMU (Side Module Universal)

For further information on calculating the collapse factor, see page III-32.

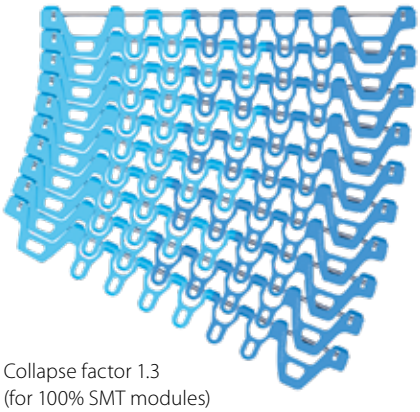

Collapse factor 1.3
(for 100% SMT modules)

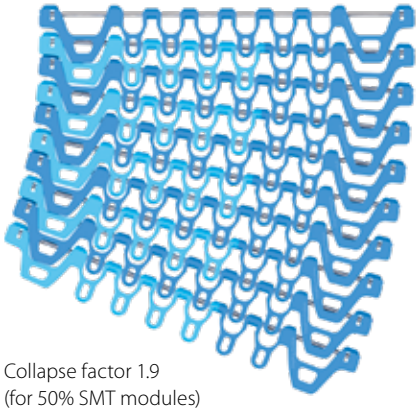

Collapse factor 1.9
(for 50% SMT modules)

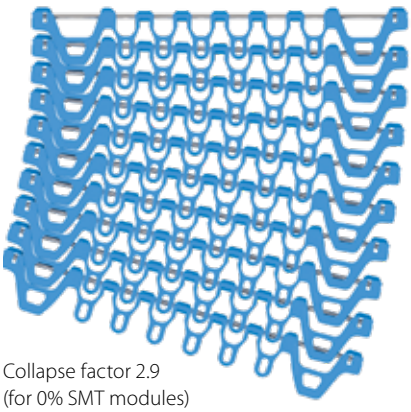

Collapse factor 2.9
(for 0% SMT modules)

MOVEMENT SYSTEMS

S9.1 SPR | Sprockets

Single-row sprocket for series 9.1 and series 9 in spiral applications

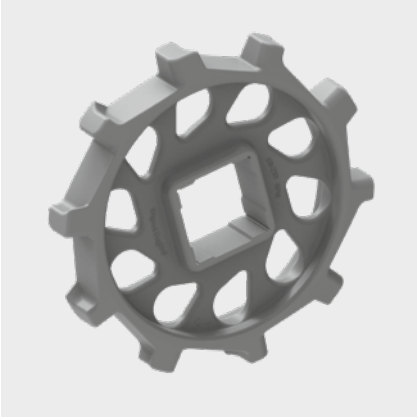

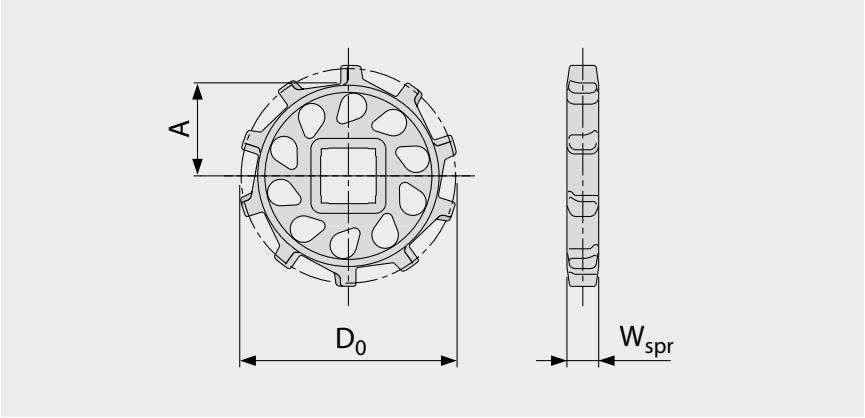

Main dimensions

Sprocket size (Number of teeth)		Z10
W_{spr}	mm	24.0
	inch	0.94
D_0	mm	161.8
	inch	6.37
A_{max}	mm	73.4
	inch	2.89
A_{min}	mm	69.8
	inch	2.75

Shaft bores (● = Round, ■ = Square)

40	mm	● / ■
1.5	inch	■
2.0	inch	●

Recommended usage

Belt	Application	Recommended usage
S9.1-57 GRT	Straight/curved	This sprocket is not recommended
S9.1-57 GRT	Spiral tower with cage drive	Use in main conveying direction, only for a short time in the opposite direction and not under load

Material: PA, Color: LG

LG (Light gray)

All measurements and tolerances apply at 21 °C.
All imperial dimensions (inches) are rounded off.
For detailed sprocket and shaft dimensions see appendix 6.3
Number of sprockets (sprocket spacing distance) see chapter 3.2

S9 SPR DR | Sprockets

Double-row sprocket for series 9 and restricted use in series 9.1

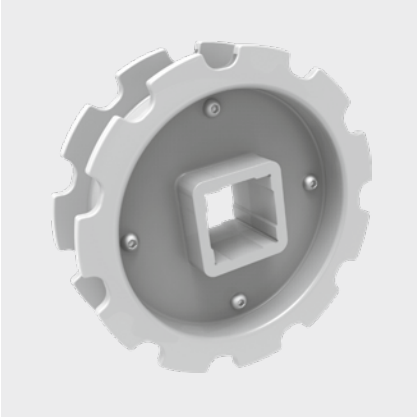

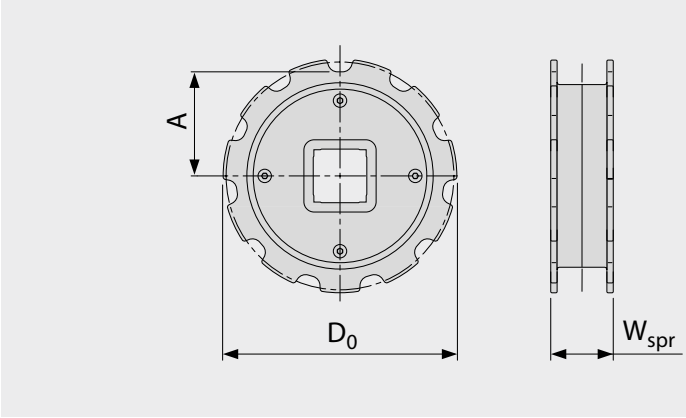

Main dimensions

Sprocket size (Number of teeth)		Z11
W_{spr}	mm	49.0
	inch	1.93
D_0	mm	178.8
	inch	7.04
A_{max}	mm	81.9
	inch	3.22
A_{min}	mm	77.4
	inch	3.05

Shaft bores (● = Round, ■ = Square; ❍ or ❑ = mold to order)

40	mm	● / ■
1.5	inch	❑

Recommended usage

Belt	Application	Recommended usage
S9.1-57 GRT	Straight/curved	Use in main conveying direction, only for a short time in the opposite direction and not under load
S9.1-57 GRT	Spiral tower with cage drive	This sprocket is not recommended

Material: POM, Color: UC

UC (Uncolored)

All measurements and tolerances apply at 21 °C.
All imperial dimensions (inches) are rounded off.
For detailed sprocket and shaft dimensions see appendix 6.3
Number of sprockets (sprocket spacing distance) see chapter 3.2

SERIES 9.1 | **INSTALLATION NOTES**

Side flexing and spiral belt | Pitch 50 mm (1.97 in)

Preferred travel direction

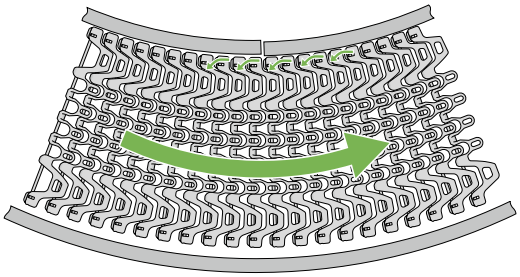

Curve conveyor

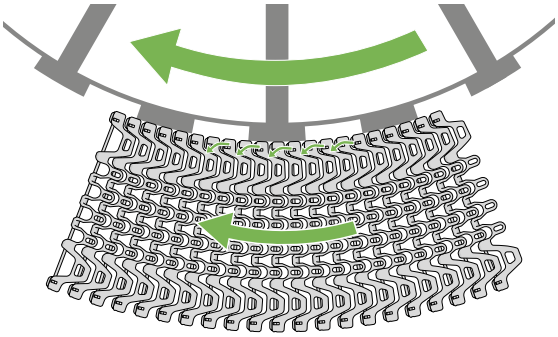

Cage driven spiral

Curve direction S9.1 -> Belt CW (ClockWise)

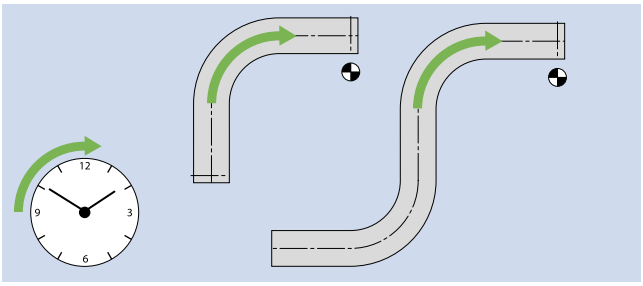

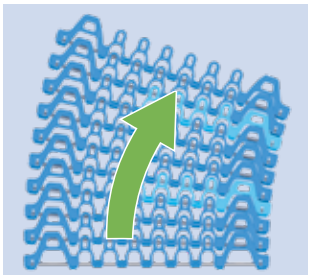

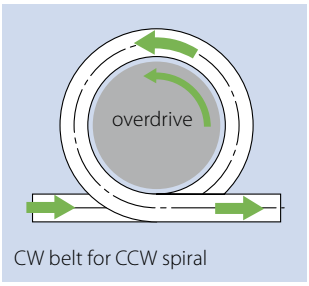

CW belt for CCW spiral

Curve direction S9.1 -> Belt CCW (Counter ClockWise)

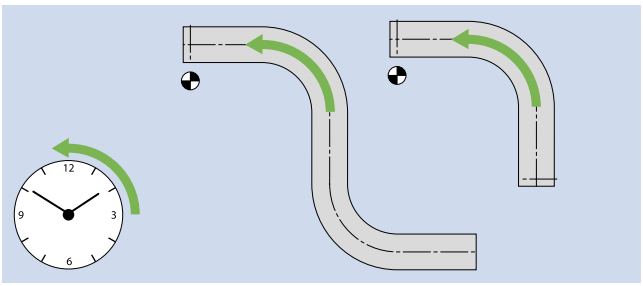

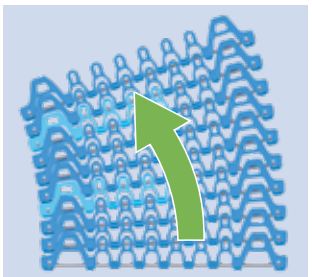

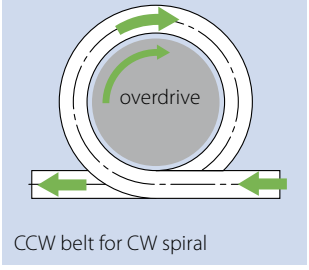

CCW belt for CW spiral

Sprocket installation

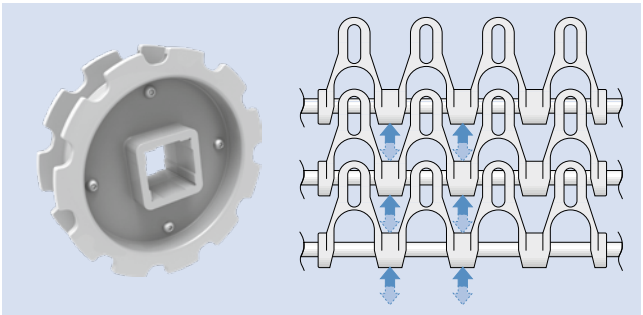

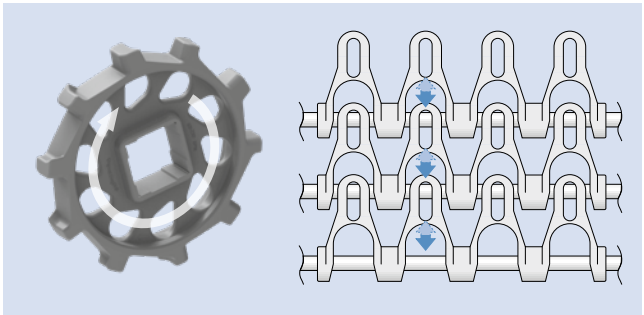





Further information in chapter 3 and 5

MOVEMENT SYSTEMS

siegling prolink
modular belts

SERIES 10

Straight running belts
Pitch 25.4 mm (1 in)

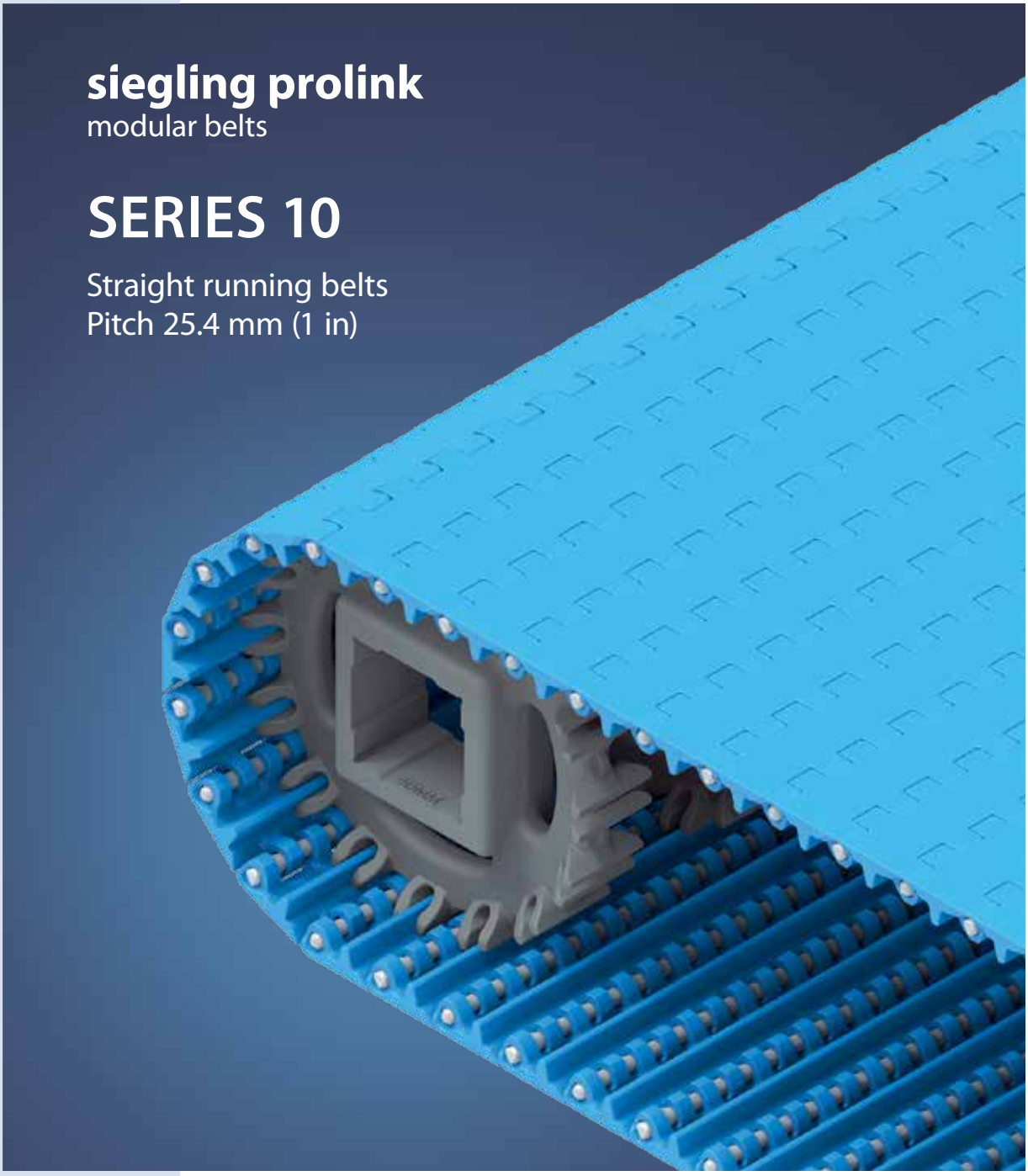

SERIES 10 | **OVERVIEW**

Straight running belts | Pitch 25.4 mm (1 in)

Belts for light to medium-duty hygiene-critical applications

Side view scale 1:1

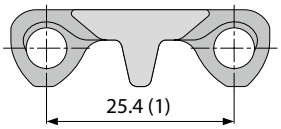

Design characteristics

- Small number of eyelets ensures easy cleaning
- Hinges that open wide, combined with smooth, flat channels on the underside and a continuous drive bar produce an easy-to-clean design
- Robust design guarantees superior durability
- Optimal design of sprocket teeth and tracking fins provides superior sprocket engagement, safe belt tracking and an easy-to-clean sprocket

Basic data

Pitch	25.4 mm (1 in)
Belt width min.	38.1 mm (1.5 in)
Width increments	19.05 mm (0.75 in)
Hinge pins	5 mm (0.2 in) made of plastic (PBT, PP, PE, PP-MD, POM-MD). One-piece up to a belt width of 1200 mm (47 in).

Available surface pattern and opening area

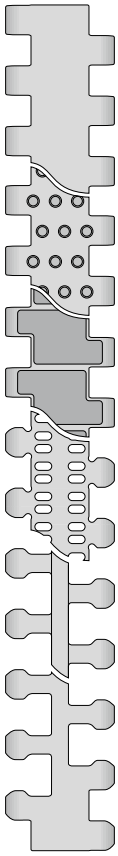

S10-0 FLT
Closed, smooth surface

S10-0 NTP
Closed surface with round studs

S10-0 FRT1
Closed surface with friction top

S10-22 FLT
Open (22 %), smooth surface

S10-36 LRB
Open (36 %) surface and lateral ribbing

S10-36 FLT
Open (36 %), smooth surface

NSF Certified

NSF-compliant from these certified Forbo plants: Huntersville (USA), Malacky (Slovakia), Tlalnepantla (Mexico)

Sprockets
in different sizes with round or square bore

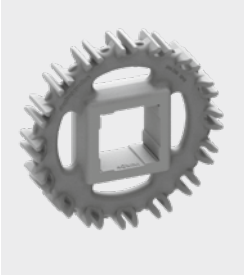

Profiles
in different heights and designs for inclines

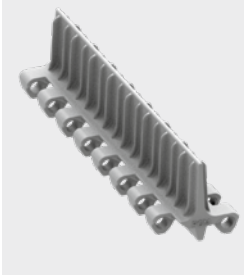

Side guards
in different heights for retention of bulk products

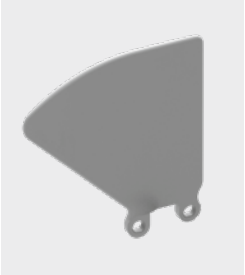

Hold Down Tabs
Hold Down Tabs for additional guiding



ProSnap
Quick-Release for easy opening and closing of the belt



S10-0 FLT | 0 % Opening | Flat top

Closed, smooth surface | Flat top surface

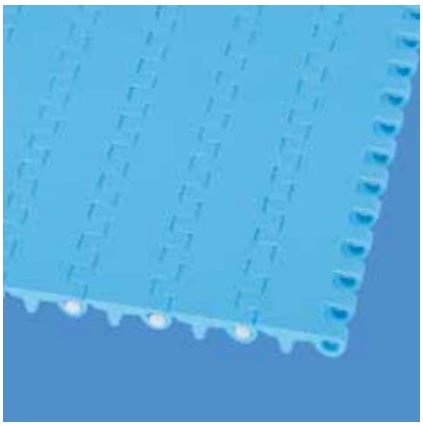

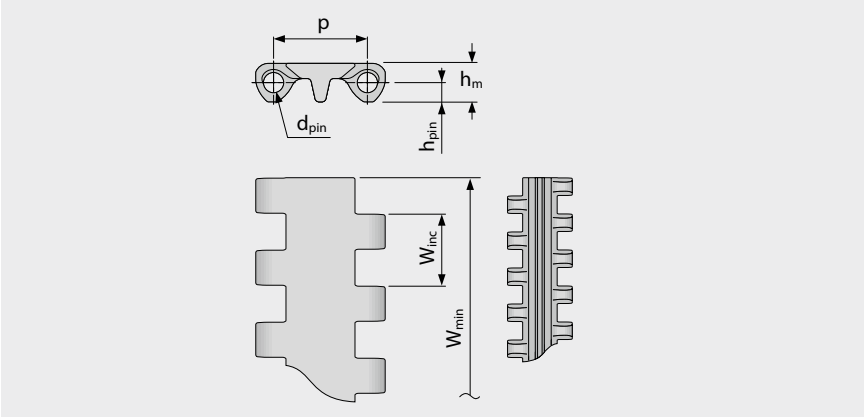

Belt dimensions

	p	d_{pin}	h_m	h_{pin}	h_s	W_{min}	W_{inc}	W_{tol}	Minimum flex radii[1]				
	Pitch	Pin Ø	Thickness	Pin position	Height	Width min.	Width Increment	Width tolerance [%]	r1 C_c x W_B	r2	r3	r4	r5
mm	25.4	5.0	10.2	5.1	0.0	38.1	19.1	±0.2	–	25.4	50.8	76.2	25.4
inch	1.0	0.2	0.4	0.2	0.0	1.5	0.75	±0.2	–	1.0	2.0	3.0	1.0

Available standard materials [3]

Belt		Pin		Nominal belt pull, straight		Weight		Width deviation	Temperature		Certificates[2]		
Material	Color	Material	Color	[N/mm]	[lb/ft]	[kg/m²]	[lb/ft²]	[%]	[°C]	[°F]	FDA	EU	MHLW
PE	WT/LB	PE	WT	6	411	5.4	1.11	0.0	-70/65	-94/149	●	●	●
POM	WT/LB	PBT	UC	20	1370	8.0	1.64	0.0	-45/90	-49/194	●	●	●
POM-MD	BL	POM-MD	BL	20	1370	8.3	1.7	0.0	-45/90	-49/194	●	●	●
PP	WT/LB	PP	WT	8	548	5.1	1.04	0.26	5/100	41/212	●	●	●
PP-MD	BL	PP-MD	BL	8	548	5.3	1.09	0.26	5/100	41/212	●	●	●
Mold to order belts													
PA*	BL	PBT	UC	17	1165	6.7	1.37	0.74	-40/120	-40/248	●	●	●
PE-MD	BL	POM-MD	BL	6	411	5.9	1.21	0.0	-70/65	-94/149	●	●	●
PP-SW	BL	PP-SW	BL	6	411	5.1	1.04	0.26	5/100	41/212	●	●	●
TPC1	LB	PBT	UC	6	411	7.1	1.45	-0.13	-25/80	-13/176	●	●	●

Mold to width available in: 76 mm (3.0 in), 152 mm (6.0 in), 229 mm (9.0 in)

* Values valid for dry applications (RH <50 %). Belts in PA material will absorb water in wet environments, causing them to expand and reduce the nominal belt pull capacity.

BL (Blue), LB (Light blue), UC (Uncolored), WT (White)

All measurements and tolerances apply at 21 °C; for temperature deviations please see Prolink manual chapter 4.4 "Temperature influence".
All imperial dimensions (inches) are rounded off.

[1] Flex radii: r1 = side flex, r2 = front flex on roller, r3 = back flex on load bearing roller, r4 = back flex on Hold Down shoe, r5 = back flex on roller

[2] Complies with FDA 21 CFR | Complies with (EU) 10/2011 and (EC) 1935/2004 regulations regarding the raw materials used and the migration thresholds | Complies with Japanese MHLW Notification 370
● = available | – = not available | empty cells = not tested

[3] More materials and colors on request

S10-0 NTP | 0 % Opening | Nub top (round studs)

Closed surface with round studs 9 % contact area | Version available without round studs at the side (38 mm indent)

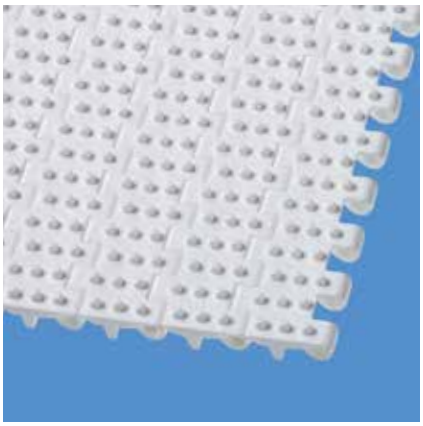

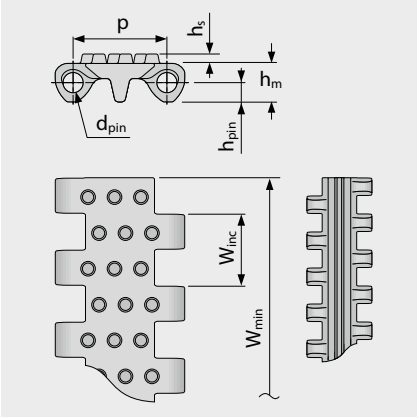

Variant specific dimensions [mm (in)]

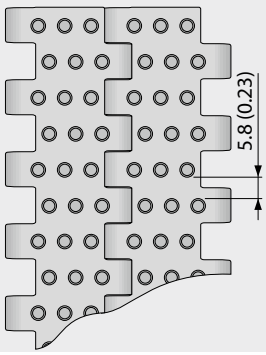

Belt dimensions

	p	d_{pin}	h_m	h_{pin}	h_s	W_{min}	W_{inc}	W_{tol}	Minimum flex radii[1]				
	Pitch	Pin Ø	Thickness	Pin position	Height	Width min.	Width Increment	Width tolerance [%]	r1 C_c x W_B	r2	r3	r4	r5
mm	25.4	5.0	10.2	5.1	2.5	38.1	19.1	±0.2	–	25.4	50.8	76.2	25.4
inch	1.0	0.2	0.4	0.2	0.1	1.5	0.75	±0.2	–	1.0	2.0	3.0	1.0

Available standard materials [3]

Belt		Pin		Nominal belt pull, straight		Weight		Width deviation	Temperature		Certificates[2]		
Material	Color	Material	Color	[N/mm]	[lb/ft]	[kg/m²]	[lb/ft²]	[%]	[°C]	[°F]	FDA	EU	MHLW
PE	WT	PE	WT	6	411	5.5	1.13	0.0	-70/65	-94/149	●	●	●
PE	LB	PE	WT	6	411	5.5	1.13	0.0	-70/65	-94/149	●	●	●
POM	WT/LB	PBT	UC	20	1370	8.2	1.68	0.0	-45/90	-49/194	●	●	●
PP	WT/LB	PP	WT	8	548	5.1	1.04	0.26	5/100	41/212	●	●	●
PP-MD	BL	PP-MD	BL	8	548	5.4	1.11	0.26	5/100	41/212	●	●	●
Mold to order belts													
PE-MD	BL	POM-MD	BL	6	411	6.5	1.33	0.0	-70/65	-94/149	●	●	●

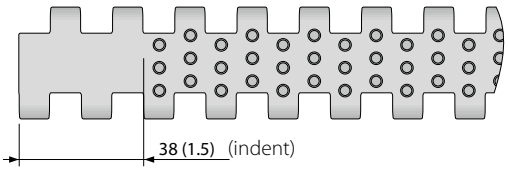

Also available with molded indent 38 mm (1.5 in)

Mold to width available in: 229 mm (9.0 in)

BL (Blue), LB (Light blue), UC (Uncolored), WT (White)

All measurements and tolerances apply at 21 °C; for temperature deviations please see Prolink manual chapter 4.4 "Temperature influence".
All imperial dimensions (inches) are rounded off.

[1] Flex radii: r1 = side flex, r2 = front flex on roller, r3 = back flex on load bearing roller, r4 = back flex on Hold Down shoe, r5 = back flex on roller

[2] Complies with FDA 21 CFR | Complies with (EU) 10/2011 and (EC) 1935/2004 regulations regarding the raw materials used and the migration thresholds | Complies with Japanese MHLW Notification 370

● = available | – = not available | empty cells = not tested

[3] More materials and colors on request

S10-0 FRT1 | 0 % Opening | Friction top (Design 1)

Closed surface with flat integrated friction pads (FRT1) for high grip | 67 % contact area | Version available without FRT1 structure at the side (38 mm indent)

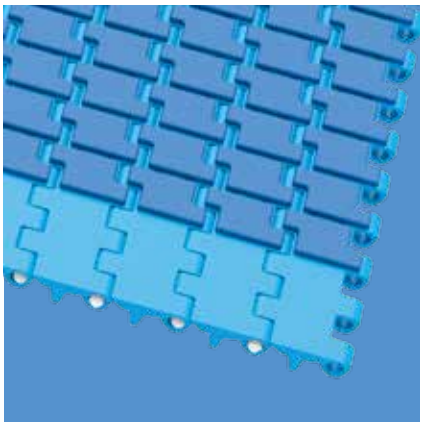

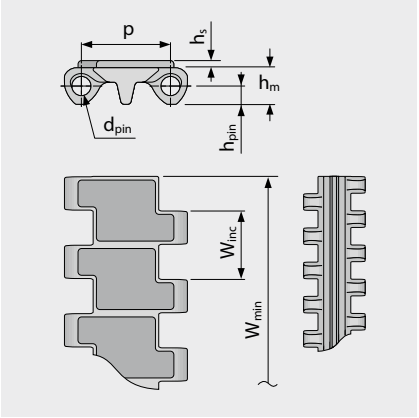

Variant specific dimensions [mm (in)]

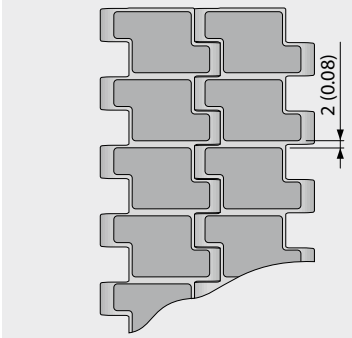

Belt dimensions

	p	d_{pin}	h_m	h_{pin}	h_s	W_{min}	W_{inc}	W_{tol}	Minimum flex radii[1]				
	Pitch	Pin Ø	Thickness	Pin position	Height	Width min.	Width Increment	Width tolerance [%]	r1 C_c x W_B	r2	r3	r4	r5
mm	25.4	5.0	10.2	5.1	2.0	38.1	19.1	±0.2	–	25.4	50.8	76.2	25.4
inch	1.0	0.2	0.4	0.2	0.08	1.5	0.75	±0.2	–	1.0	2.0	3.0	1.0

Available standard materials [3]

Belt		Pin		Rubber		Nominal belt pull, straight		Weight		Width deviation	Temperature		Certificates[2]		
Material	Color	Material	Color	Material	Color	[N/mm]	[lb/ft]	[kg/m²]	[lb/ft²]	[%]	[°C]	[°F]	FDA	EU	MHLW
PP	WT	PP	WT	R7	BG	8	548	6.3	1.29	0.26	5/100	41/212	●	●	
PP	LB	PP	WT	R7	BK	8	548	6.3	1.29	0.26	5/100	41/212	●	●	
PP	LB	PP	WT	R7	BL	8	548	6.3	1.29	0.26	5/100	41/212	●	●	

Mold to width available in: 229 mm (9.0 in)

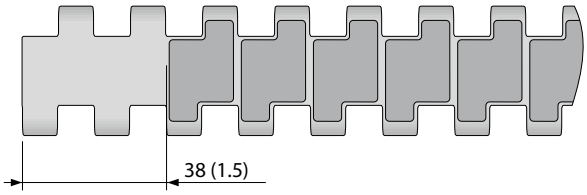

Also available with molded indent 38 mm (1.5 in)

BG (Beige), BL (Blue), BK (Black), LB (Light blue), WT (White)

All measurements and tolerances apply at 21 °C; for temperature deviations please see Prolink manual chapter 4.4 "Temperature influence".
All imperial dimensions (inches) are rounded off.

[1] Flex radii: r1 = side flex, r2 = front flex on roller, r3 = back flex on load bearing roller, r4 = back flex on Hold Down shoe, r5 = back flex on roller

[2] Complies with FDA 21 CFR | Complies with (EU) 10/2011 and (EC) 1935/2004 regulations regarding the raw materials used and the migration thresholds | Complies with Japanese MHLW Notification 370

● = available | – = not available | empty cells = not tested

[3] More materials and colors on request

S10-22 FLT | 22 % Opening | Flat top

Open area (22 %) for excellent air circulation and drainage | Smooth surface | 70 % contact area (Largest opening: 2.6 x 5.3 mm/0.10 x 0.21 in)

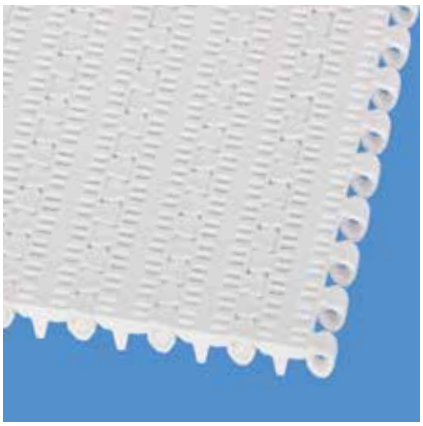

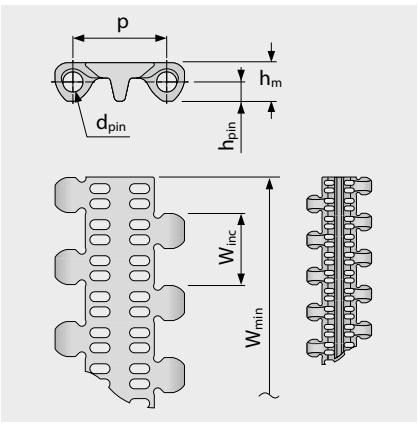

Variant specific dimensions [mm (in)]

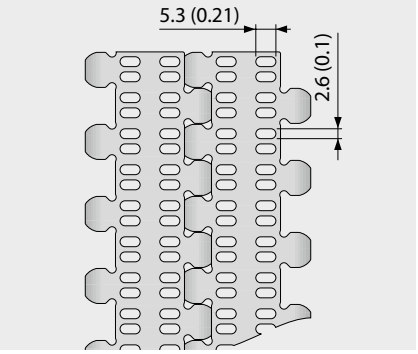

Belt dimensions

	p	d_{pin}	h_m	h_{pin}	h_s	W_{min}	W_{inc}	W_{tol}	Minimum flex radii[1]				
	Pitch	Pin Ø	Thickness	Pin position	Height	Width min.	Width Increment	Width tolerance [%]	r1 C_c x W_B	r2	r3	r4	r5
mm	25.4	5.0	10.2	5.1	0.0	38.1	19.1	±0.2	–	25.4	50.8	76.2	25.4
inch	1.0	0.2	0.4	0.2	0.0	1.5	0.75	±0.2	–	1.0	2.0	3.0	1.0

Available standard materials [3]

Belt		Pin		Nominal belt pull, straight		Weight		Width deviation	Temperature		Certificates[2]		
Material	Color	Material	Color	[N/mm]	[lb/ft]	[kg/m²]	[lb/ft²]	[%]	[°C]	[°F]	FDA	EU	MHLW
PE	WT	PE	WT	3	206	4.7	0.96	0.0	-70/65	-94/149	●	●	●
PE	LB	PE	WT	3	206	4.7	0.96	0.0	-70/65	-94/149	●	●	●
POM	WT	PBT	UC	11	754	6.7	1.37	0.0	-45/90	-49/194	●	●	●
POM	LB	PBT	UC	11	754	6.7	1.37	0.0	-45/90	-49/194	●	●	●
PP	WT	PP	WT	5	343	4.3	0.88	0.26	5/100	41/212	●	●	●
PP	LB	PP	WT	5	343	4.3	0.88	0.26	5/100	41/212	●	●	●
PP-MD	BL	PP-MD	BL	5	343	4.9	1.0	0.0	5/100	41/212	●	●	●
Mold to order belts													
PE-MD	BL	POM-MD	BL	3	206	5.1	1.04	0.0	-70/65	-94/149	●	●	●

Mold to width available in: 76 mm (3.0 in), 229 mm (9.0 in)

BL (Blue), LB (Light blue), UC (Uncolored), WT (White)

All measurements and tolerances apply at 21 °C; for temperature deviations please see Prolink manual chapter 4.4 "Temperature influence".
All imperial dimensions (inches) are rounded off.

[1] Flex radii: r1 = side flex, r2 = front flex on roller, r3 = back flex on load bearing roller, r4 = back flex on Hold Down shoe, r5 = back flex on roller

[2] Complies with FDA 21 CFR | Complies with (EU) 10/2011 and (EC) 1935/2004 regulations regarding the raw materials used and the migration thresholds | Complies with Japanese MHLW Notification 370
● = available | – = not available | empty cells = not tested

[3] More materials and colors on request

S10-36 LRB | 36 % Opening | Lateral rib

Open area (36 %) for excellent air circulation and drainage | Lateral ribbing 12 % contact area (Largest opening: Ø = 5.9 mm/0.23 in) | Open area lateral rib version for small inclines and gentle conveying of delicate products

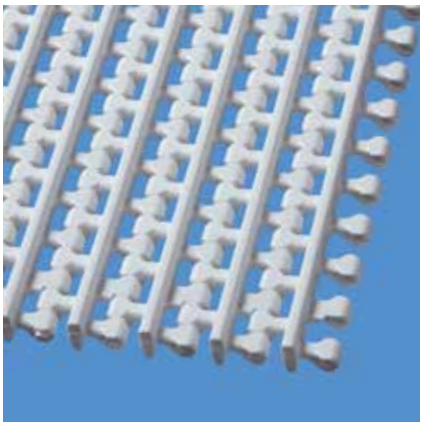

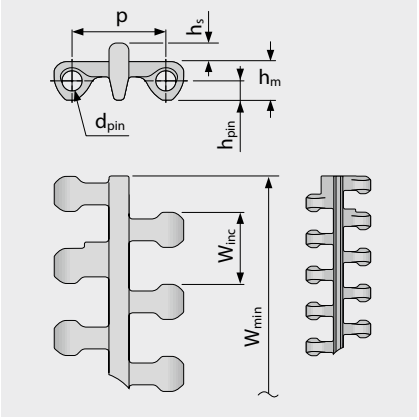

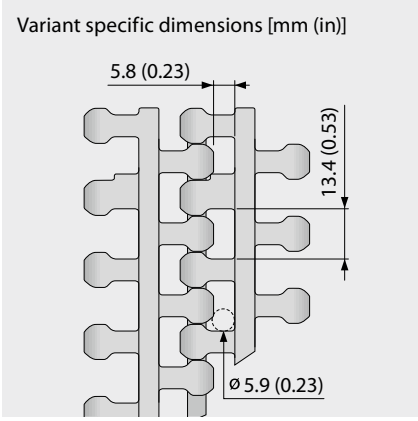

Belt dimensions

	p	d_{pin}	h_m	h_{pin}	h_s	W_{min}	W_{inc}	W_{tol}	Minimum flex radii[1]				
	Pitch	Pin Ø	Thickness	Pin position	Height	Width min.	Width Increment	Width tolerance [%]	r1 C_c x W_B	r2	r3	r4	r5
mm	25.4	5.0	10.2	5.1	4.9	38.1	19.1	±0.2	–	25.4	50.8	76.2	25.4
inch	1.0	0.2	0.4	0.2	0.19	1.5	0.75	±0.2	–	1.0	2.0	3.0	1.0

Available standard materials [3]

Belt		Pin		Nominal belt pull, straight		Weight		Width deviation	Temperature		Certificates[2]		
Material	Color	Material	Color	[N/mm]	[lb/ft]	[kg/m²]	[lb/ft²]	[%]	[°C]	[°F]	FDA	EU	MHLW
PE	WT	PE	WT	4	274	5.8	1.19	0.0	-70/65	-94/149	●	●	●
PE	LB	PE	WT	4	274	5.8	1.19	0.0	-70/65	-94/149	●	●	●
POM	LB	PBT	UC	13	891	7.6	1.56	0.0	-45/90	-49/194	●	●	●
PP	WT	PP	WT	6	411	4.9	1.0	0.26	5/100	41/212	●	●	●
PP	LB	PP	WT	6	411	4.9	1.0	0.26	5/100	41/212	●	●	●
Mold to order belts													
POM	WT	PBT	UC	13	891	7.6	1.56	0.0	-45/90	-49/194	●	●	●

Mold to width available in: 229 mm (9.0 in)

LB (Light blue), UC (Uncolored), WT (White)

All measurements and tolerances apply at 21 °C; for temperature deviations please see Prolink manual chapter 4.4 "Temperature influence".
All imperial dimensions (inches) are rounded off.

[1] Flex radii: r1 = side flex, r2 = front flex on roller, r3 = back flex on load bearing roller, r4 = back flex on Hold Down shoe, r5 = back flex on roller

[2] Complies with FDA 21 CFR | Complies with (EU) 10/2011 and (EC) 1935/2004 regulations regarding the raw materials used and the migration thresholds | Complies with Japanese MHLW Notification 370

● = available | – = not available | empty cells = not tested

[3] More materials and colors on request

S10-36 FLT | 36 % Opening | Flat top

Open area (36 %) for excellent air circulation and drainage | Smooth surface | 44 % contact area (Largest opening: Ø = 5.9 mm/0.23 in)

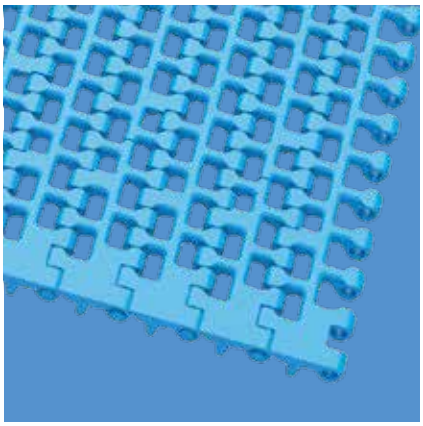

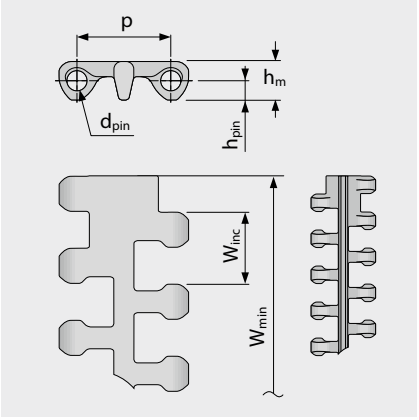

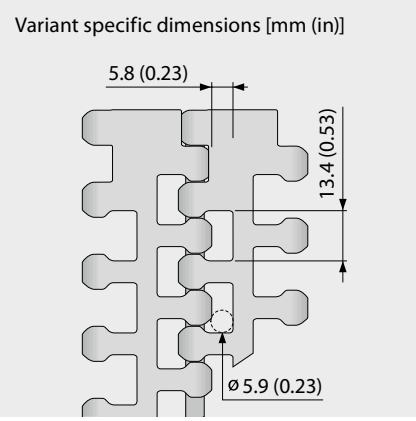

Belt dimensions

	p	d_{pin}	h_m	h_{pin}	h_s	W_{min}	W_{inc}	W_{tol}	Minimum flex radii[1]				
	Pitch	Pin Ø	Thickness	Pin position	Height	Width min.	Width Increment	Width tolerance [%]	r1 C_c x W_B	r2	r3	r4	r5
mm	25.4	5.0	10.2	5.1	0.0	95.3	19.1	±0.2	–	25.4	50.8	76.2	25.4
inch	1.0	0.2	0.4	0.2	0.0	3.75	0.75	±0.2	–	1.0	2.0	3.0	1.0

Available standard materials [3]

Belt		Pin		Nominal belt pull, straight		Weight		Width deviation	Temperature		Certificates[2]		
Material	Color	Material	Color	[N/mm]	[lb/ft]	[kg/m²]	[lb/ft²]	[%]	[°C]	[°F]	FDA	EU	MHLW
PA*	BL	PBT	UC	13	891	6.0	1.23	0.74	-40/120	-40/248	●	●	●
PE	WT/LB	PE	WT	4	274	4.3	0.88	0.0	-70/65	-94/149	●	●	●
POM	WT/LB	PBT	UC	13	891	6.2	1.27	0.0	-45/90	-49/194	●	●	●
PP	WT/LB	PP	WT	6	411	4.0	0.82	0.26	5/100	41/212	●	●	●
PP-MD	BL	PP-MD	BL	6	411	4.4	0.9	0.26	5/100	41/212	●	●	●
Mold to order belts													
POM-MD	BL	POM-MD	BL	13	891	6.6	1.35	0.0	-45/90	-49/194	●	●	●

* Values valid for dry applications (RH <50 %). Belts in PA material will absorb water in wet environments, causing them to expand and reduce the nominal belt pull capacity.

Attention! Due to the very large surface openings, personnel must be instructed not to place their fingers in or on this belt.

BL (Blue), LB (Light blue), UC (Uncolored), WT (White)

All measurements and tolerances apply at 21 °C; for temperature deviations please see Prolink manual chapter 4.4 "Temperature influence".
All imperial dimensions (inches) are rounded off.

[1] Flex radii: r1 = side flex, r2 = front flex on roller, r3 = back flex on load bearing roller, r4 = back flex on Hold Down shoe, r5 = back flex on roller

[2] Complies with FDA 21 CFR | Complies with (EU) 10/2011 and (EC) 1935/2004 regulations regarding the raw materials used and the migration thresholds | Complies with Japanese MHLW Notification 370
● = available | – = not available | empty cells = not tested

[3] More materials and colors on request

S10-0 FLT PSP | ProSnap

Quick-Release for easy, quick and toolless opening and closing of the belt | One pin solution for entire belt width



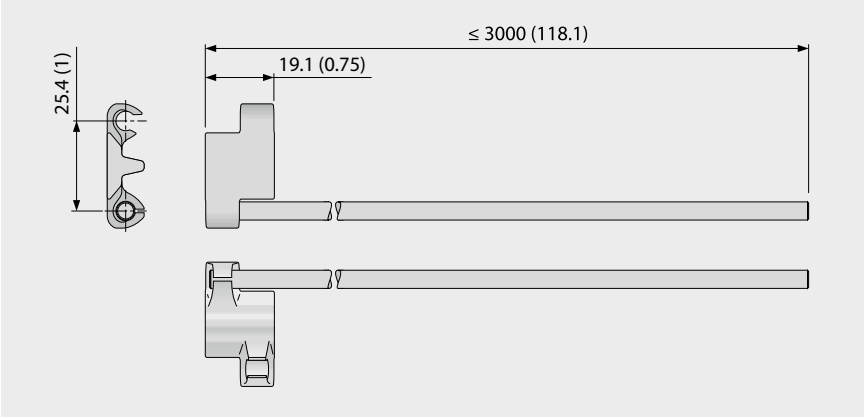

Basic data

Module		Pin	
Material	Color	Material	Length [mm (in)]
POM	BL	SS	≤ 3000 (118)
Mold to order			
POM-MD	BL	SS	≤ 3000 (118)

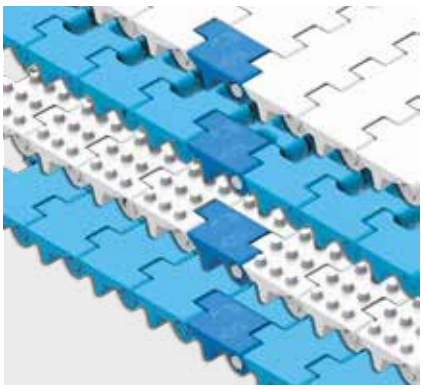

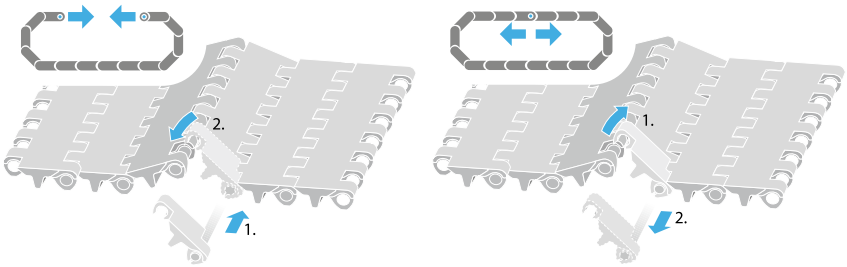

BL (Blue)

All measurements and tolerances apply at 21 °C; for temperature deviations please see Prolink manual chapter 4.4 "Temperature influence".
All imperial dimensions (inches) are rounded off.
Note: Use of accessory in a belt may impact on the minimum design radii. Please see chapter 6.3 for further information.

S10 SPR | Sprockets

Optimal design of sprocket teeth and tracking fins provides superior sprocket engagement, safe belt tracking and an easy-to-clean sprocket

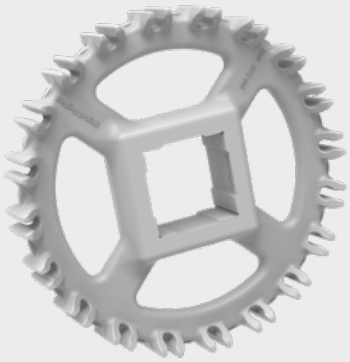

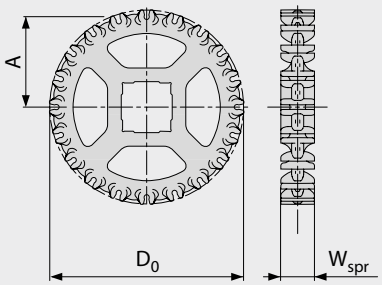

Main dimensions

Sprocket size (Number of teeth)		Z6	Z8	Z10	Z12	Z15	Z16	Z18	Z20
W_{spr}	mm	28.0	28.0	28.0	28.0	28.0	28.0	28.0	28.0
	inch	1.10	1.10	1.10	1.10	1.10	1.10	1.10	1.10
D_0	mm	51.4	66.8	82.4	98.2	122.4	130.4	146.4	162.5
	inch	2.02	2.63	3.24	3.87	4.82	5.13	5.76	6.40
A_{max}	mm	19.8	27.9	35.9	43.9	56.0	60.0	68.1	76.1
	inch	0.78	1.10	1.41	1.73	2.20	2.36	2.68	3.00
A_{min}	mm	17.2	25.8	34.1	42.4	54.8	58.9	67.0	75.2
	inch	0.68	1.02	1.34	1.67	2.16	2.32	2.64	2.96

Shaft bores (● = Round, ■ = Square; ❍ or ❑ = mold to order)

25	mm	●	● / ■	■					
30	mm			●	●	●	●	●	●
40	mm			❍ / ■	● / ■	❍ / ■	■	■	❍ / ■
60	mm								■
1	inch	●	● / ■	● / ■	●	●	●	●	●
1.25	inch			●	●	●	●	●	●
1.44	inch				●	❍			●
1.5	inch			■	■	■	■	■	■
2.5	inch								■

Material: PA, Color: LG

LG (Light gray)

All measurements and tolerances apply at 21 °C.
All imperial dimensions (inches) are rounded off.
For detailed sprocket and shaft dimensions see appendix 6.3
Number of sprockets (sprocket spacing distance) see chapter 3.2

S10-0 FLT PMU/S10-0 FLT PMU I38

Flat top surface for dry products

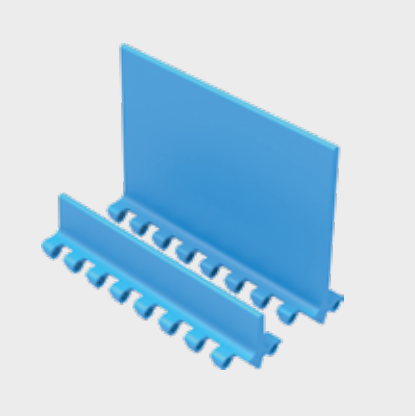

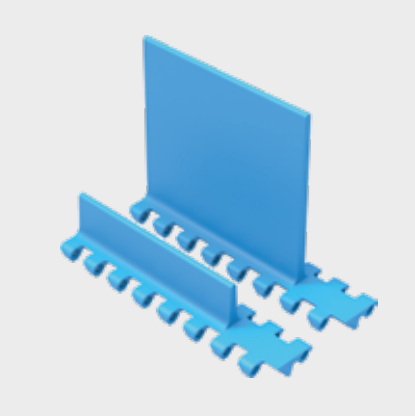

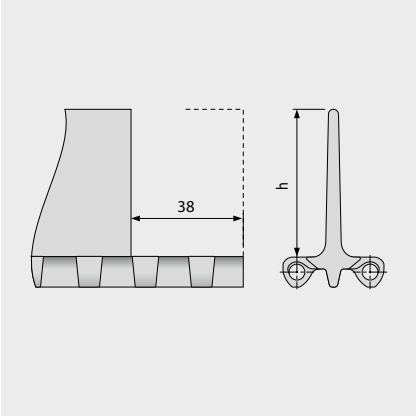

Basic data

Material	Color	Height (h)	
		25 mm 1 inch	100 mm 4 inch
PE	LB	●/▲	●/▲
PE	WT	●/▲	●/▲
POM	LB	●/▲	●/▲
POM	WT	●/▲	●/▲
PP	LB	●/▲	●/▲
PP	WT	●/▲	●/▲

● = no indent, ▲ = with indent 38 mm

Molded width: 152 mm (6.0 in)

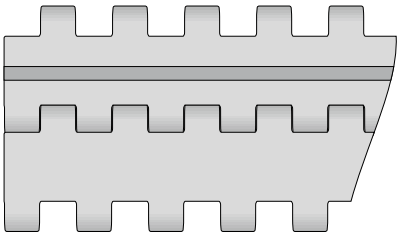

Standard configuration S10-0 FLT PMU

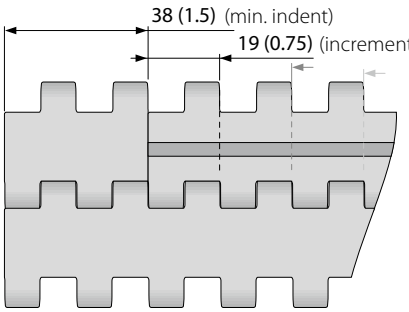

Indent configuration S10-0 FLT PMU

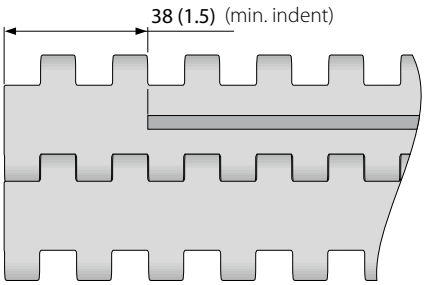

Standard configuration S10-0 FLT PMU I38

LB (Light blue), WT (White)

All measurements and tolerances apply at 21 °C; for temperature deviations please see Prolink manual chapter 4.4 "Temperature influence".
All imperial dimensions (inches) are rounded off.
Note: Use of accessory in a belt may impact on the minimum design radii. Please see chapter 6.3 for further information.

S10-0 NCL PMU/S10-0 NCL PMU I38

No cling surface to improve release of wet and sticky products





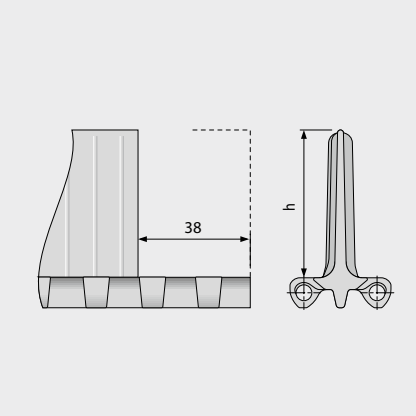

Basic data

Material	Color	Height (h)	
		25 mm 1 inch	100 mm 4 inch
PE	LB/WT	●/▲	●/▲
PE-MD	BL	❍/△	❍
POM	LB/WT	●/▲	●/▲
POM-MD	BL	❍/△	●/△
PP	LB/WT	●/▲	●/▲
PP-MD	BL		●/▲

● = no indent, ▲ = with indent 38 mm, ❍ = no indent – mold to order, △ = with indent – mold to order

Molded width: 152 mm (6.0 in)

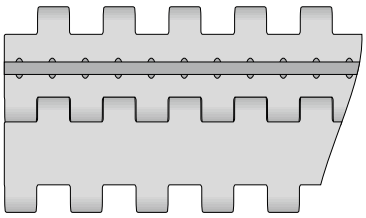

Standard configuration S10-0 NCL PMU

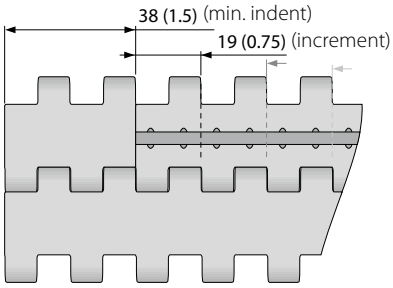

Indent configuration S10-0 NCL PMU

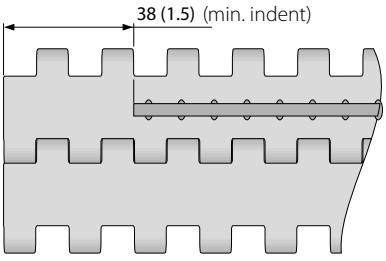

Standard configuration S10-0 NCL PMU I38

BL (Blue), LB (Light blue), WT (White)

All measurements and tolerances apply at 21 °C; for temperature deviations please see Prolink manual chapter 4.4 "Temperature influence".
All imperial dimensions (inches) are rounded off.
Note: Use of accessory in a belt may impact on the minimum design radii. Please see chapter 6.3 for further information.

S10 SG | Side guards

For retention of bulk products (only for modules h_s = 0 mm/in)


Recommended running direction



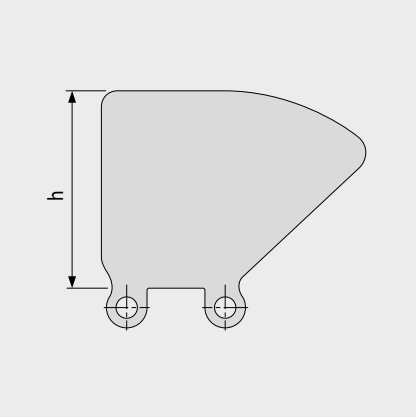

Basic data

Material	Color	Height (h)			
		25 mm 1 inch	50 mm 2 inch	75 mm 3 inch	100 mm 4 inch
PE	LB	●	●	●	●
PE	WT	●	●	●	●
PE-MD	BL	●	●		
PP	LB	●	●	●	●
PP	WT	●	●	●	●

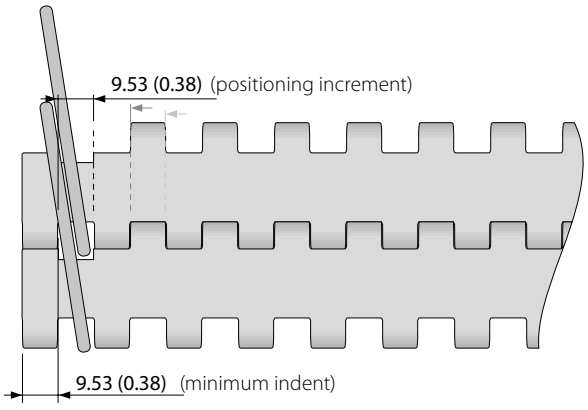

BL (Blue), LB (Light blue), WT (White)

All measurements and tolerances apply at 21 °C; for temperature deviations please see Prolink manual chapter 4.4 "Temperature influence".
All imperial dimensions (inches) are rounded off.
Note: Use of accessory in a belt may impact on the minimum design radii. Please see chapter 6.3 for further information.

S10 HDT | Hold Down Tabs

Used on wider belts to prevent lift an swan neck conveyors | To improve strength, stability and cleanability they are moulded on a narrow module

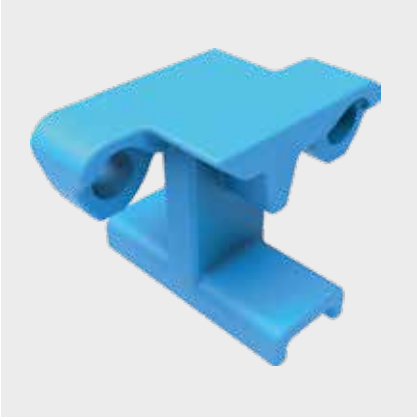

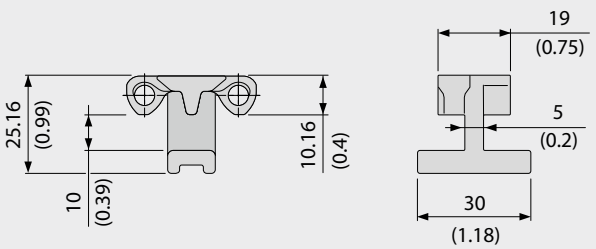

Basic data

Material	Color
POM	LB
	WT

Using Hold Down Tabs results in constrains with regards to sprocket and shaft size to ensure sufficient clearance to the shaft (see also chapter 3.3 hold down tabs).

Example

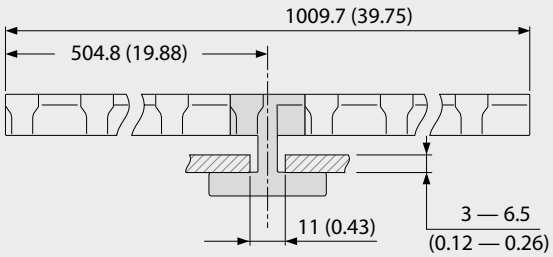

Sprocket options using HDT

Sprocket size (Number of teeth)	Maximum bore round		Maximum bore square	
	[mm]	[inch]	[mm]	[inch]
Z6	NR	NR	NR	NR
Z8	15	0.75	15	0.5
Z10	35	1.25	25	1.0
Z12	50	1.75	35	1.5
Z15	70	2.75	55	2.0
Z16	80	3.0	60	2.25
Z18	95	3.5	70	2.75
Z20	110	4.25	85	3.25

LB (Light blue), WT (White)

All measurements and tolerances apply at 21 °C; for temperature deviations please see Prolink manual chapter 4.4 "Temperature influence".
All imperial dimensions (inches) are rounded off.
Note: Use of accessory in a belt may impact on the minimum design radii. Please see chapter 6.3 for further information.

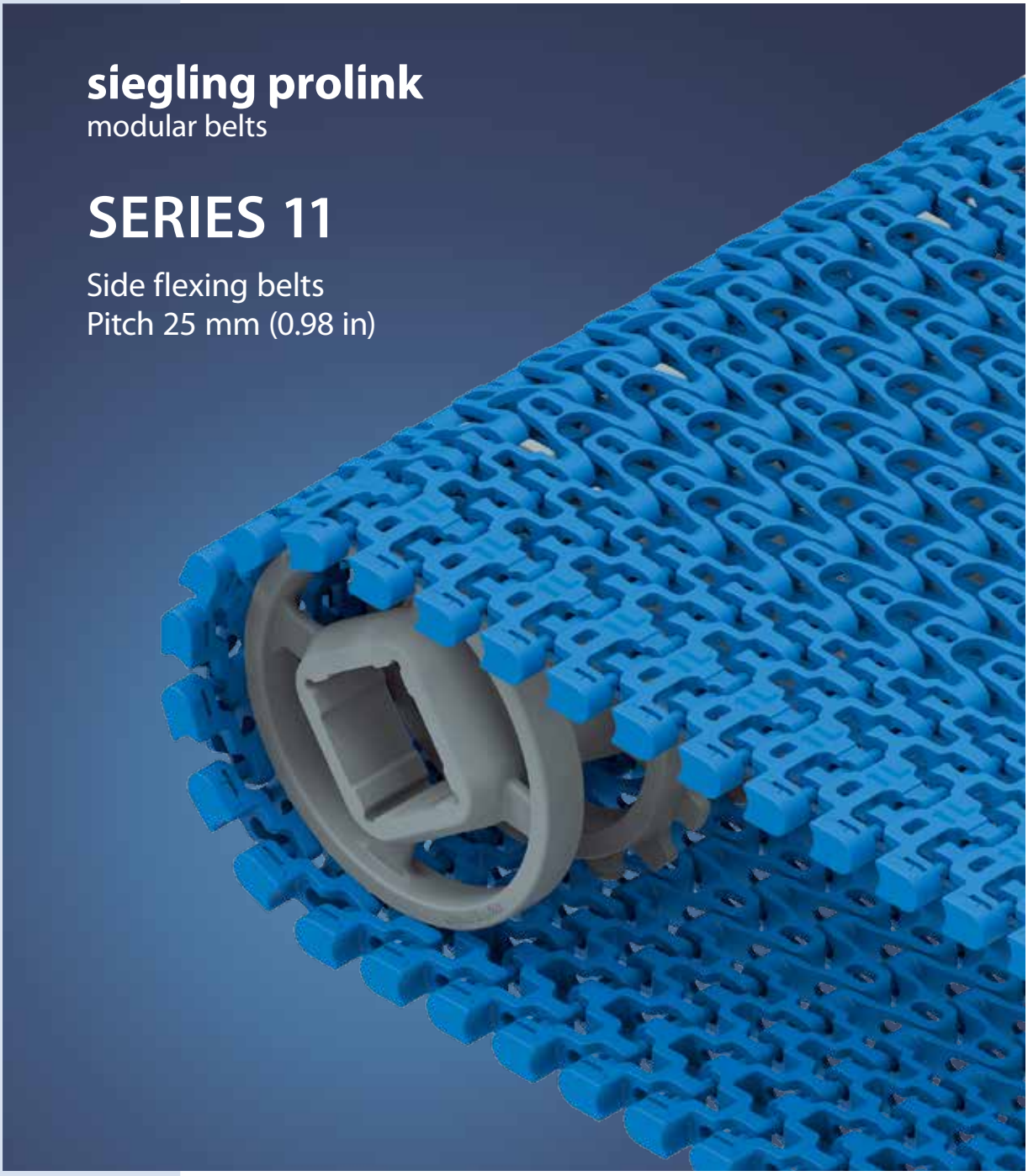
siegling prolink
modular belts
SERIES 11
Side flexing belts
Pitch 25 mm (0.98 in)

SERIES 11 | **OVERVIEW**

Side flexing belts | Pitch 25 mm (0.98 in)

Belts for light-duty food and non-food applications

Side view scale 1:1

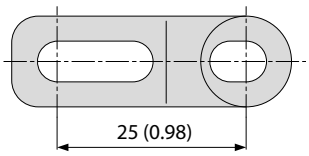

Design characteristics

- 45 % open area provides excellent cooling and draining capabilities
- All plastic lightweight belts (plastic pins)
- Tight radius belt with minimum curve radius of 1.4 x belt width
- Outermost hinge is fixed to the pin to prevent deflection and elimination of potential belt edge catch points
- Suitable for both straight and radius conveying
- Ideal transmission of force due to sprockets offset inwards. Idlers support the belt on the outside

Basic data

Pitch	25 mm (0.98 in)
Belt width min.	175 mm (6.9 in)
Belt width max.	1000 mm (39.37 in)
Width increments	25 mm (0.98 in)
Hinge pins	5 mm (0.2 in) made of plastic (PBT) Combo: 5 mm (0.2 in) stainless steel

Available surface pattern and opening area

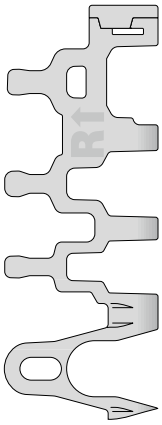

S11-45 GRT
Open (45 %), lattice-shaped surface with replaceable caps

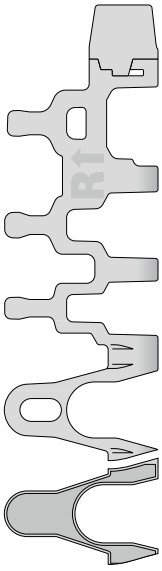

S11-45 GRT HD
Open (45 %), lattice-shaped surface with replaceable Hold Down caps

S11-33 FRT2
Open (33 % for full FRT2 surface area), surface with friction top, flat

Sprockets/Idlers
in different sizes with round or square bore

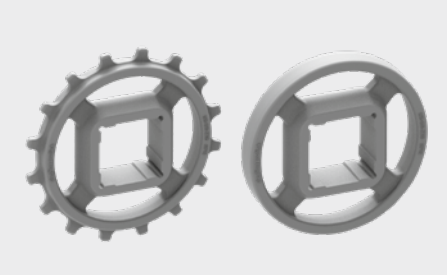

Profiles
in different heights and designs for inclines



S11-45 GRT | 45 % Opening | Grid top

Open area (45 %) for excellent air circulation and drainage | 42 % contact area (Largest opening: Ø = 9.2 mm/0.36 in) | Lattice-shaped surface with robust, replaceable caps on the belt edges | Collapse factor (C_c) = 1.4

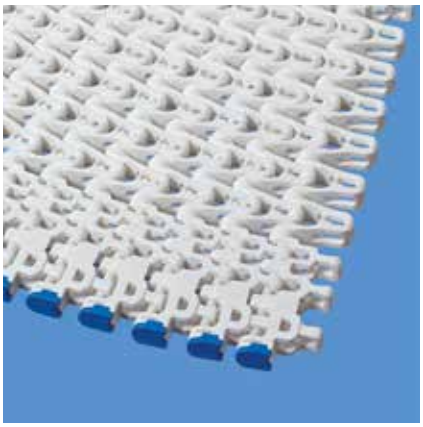

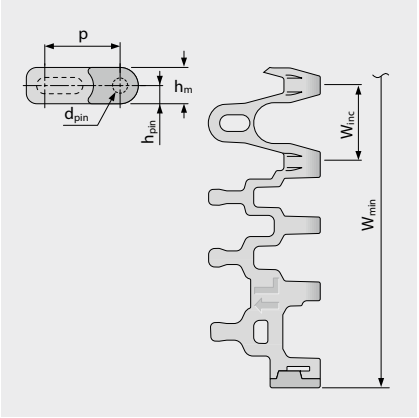

Variant specific dimensions [mm (in)]

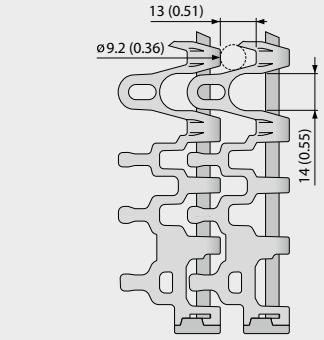

Belt dimensions

	p	d_{pin}	h_m	h_{pin}	h_s	W_{min}	W_{inc}	W_{tol}	Minimum flex radii[1]				
	Pitch	Pin Ø	Thickness	Pin position	Height	Width min.	Width Increment	Width tolerance [%]	r1 $C_c \times W_B$	r2	r3	r4	r5
mm	25.0	5.0	12.0	6.0	0.0	175.0	25.0	±0.3	1.4 x W_B	25.0	50.0	75.0	25.0
inch	0.98	0.2	0.47	0.24	0.0	6.89	0.98	±0.3	1.4 x W_B	0.98	1.97	2.95	0.98

W_B = Belt width, further information regarding r1 see page III-31

Available standard materials [3]

Belt		Pin		Nominal belt pull, straight		Nominal belt pull, curve		Weight		Width deviation	Temperature		Certificates[2]		
Material	Color	Material	Color	[N/mm]	[lb/ft]	[N]	[lb]	[kg/m²]	[lb/ft²]	[%]	[°C]	[°F]	FDA	EU	MHLW
POM-CR	WT	PBT	UC	15	1028	1000	225	6.7	1.37	0.0	-45/90	-49/194	●	●	●
POM-CR	BL	PBT	BL	15	1028	1000	225	6.7	1.37	0.0	-45/90	-49/194	●	●	●
PP	WT	PBT	UC	9	617	600	135	4.7	0.96	0.2	5/100	41/212	●	●	●
PP	BL	PBT	BL	9	617	600	135	4.7	0.96	0.2	5/100	41/212	●	●	●
Mold to order															
PA*	BL	PBT	BL	15	1028	1000	225	5.7	1.17	0.6	-40/120	-40/248	●	●	●

* Values valid for dry applications (RH <50 %). Belts in PA material will absorb water in wet environments, causing them to expand and reduce the nominal belt pull capacity.

■ BL (Blue), □ UC (Uncolored), □ WT (White)

All measurements and tolerances apply at 21 °C; for temperature deviations please see Prolink manual chapter 4.4 "Temperature influence".
All imperial dimensions (inches) are rounded off.

[1] Flex radii: r1 = side flex, r2 = front flex on roller, r3 = back flex on load bearing roller, r4 = back flex on Hold Down shoe, r5 = back flex on roller

[2] Complies with FDA 21 CFR | Complies with (EU) 10/2011 and (EC) 1935/2004 regulations regarding the raw materials used and the migration thresholds | Complies with Japanese MHLW Notification 370
● = available | – = not available | empty cells = not tested

[3] More materials and colors on request

S11-45 GRT HD | 45 % Opening | Grid top · Hold Down

Open area (45 %) for excellent air circulation and drainage | 42 % contact area (Largest opening: Ø = 9.2 mm/0.36 in) | Lattice-shaped surface with replaceable Hold Down caps | Collapse factor (C_c) = 1.4

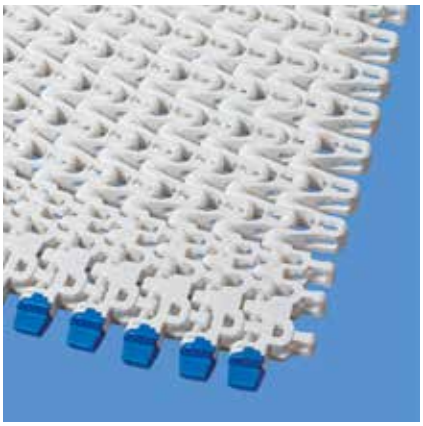

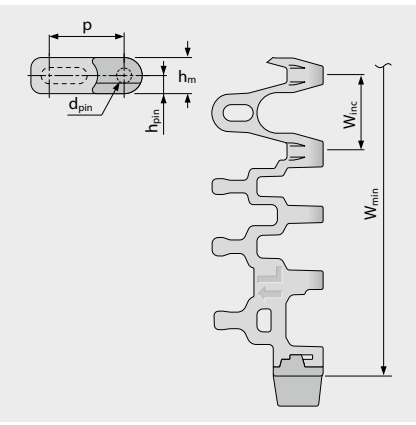

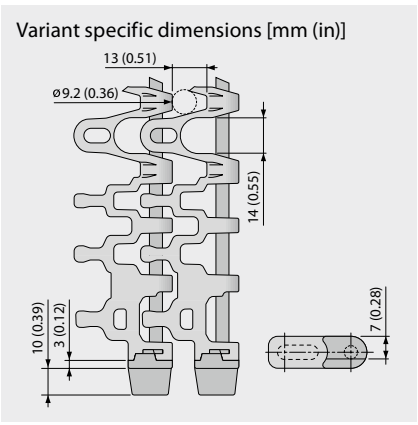

Belt dimensions

	p	d_{pin}	h_m	h_{pin}	h_s	W_{min}	W_{inc}	W_{tol}	Minimum flex radii[1]				
	Pitch	Pin Ø	Thickness	Pin position	Height	Width min.	Width Increment	Width tolerance [%]	r1 $C_c \times W_B$	r2	r3	r4	r5
mm	25.0	5.0	12.0	6.0	0.0	175.0	25.0	±0.3	1.4 x W_B	25.0	50.0	75.0	25.0
inch	0.98	0.2	0.47	0.24	0.0	6.89	0.98	±0.3	1.4 x W_B	0.98	1.97	2.95	0.98

W_B = Belt width, further information regarding r1 see page III-31

Available standard materials [3]

Belt		Pin		Nominal belt pull, straight		Nominal belt pull, curve		Weight		Width deviation	Temperature		Certificates[2]		
Material	Color	Material	Color	[N/mm]	[lb/ft]	[N]	[lb]	[kg/m²]	[lb/ft²]	[%]	[°C]	[°F]	FDA	EU	MHLW
POM-CR	WT	PBT	UC	15	1028	1000	225	6.7	1.37	0.0	-45/90	-49/194	●	●	●
POM-CR	BL	PBT	BL	15	1028	1000	225	6.7	1.37	0.0	-45/90	-49/194	●	●	●
PP	WT	PBT	UC	9	617	600	135	4.7	0.96	0.2	5/100	41/212	●	●	●
PP	BL	PBT	BL	9	617	600	135	4.7	0.96	0.2	5/100	41/212	●	●	●
Mold to order															
PA*	BL	PBT	BL	15	1028	1000	225	5.7	1.17	0.6	-40/120	-40/248	●	●	●

* Values valid for dry applications (RH <50 %). Belts in PA material will absorb water in wet environments, causing them to expand and reduce the nominal belt pull capacity.

BL (Blue), UC (Uncolored), WT (White)

All measurements and tolerances apply at 21 °C; for temperature deviations please see Prolink manual chapter 4.4 "Temperature influence".
All imperial dimensions (inches) are rounded off.

[1] Flex radii: r1 = side flex, r2 = front flex on roller, r3 = back flex on load bearing roller, r4 = back flex on Hold Down shoe, r5 = back flex on roller

[2] Complies with FDA 21 CFR | Complies with (EU) 10/2011 and (EC) 1935/2004 regulations regarding the raw materials used and the migration thresholds | Complies with Japanese MHLW Notification 370
● = available | – = not available | empty cells = not tested

[3] More materials and colors on request

S11-33 FRT2 | 33 % Opening | Friction top (Design 2)

Open area (33 %) for full FRT2 surface area | 47 % contact area (Largest opening: Ø = 8 mm/0.31 in) | Lattice-shaped surface with flat integrated friction pads (FRT2) for better grip. Minimum indent FRT2: 125 mm (5 in)/175 mm (7 in) | Collapse factor (C_c) = 1.4

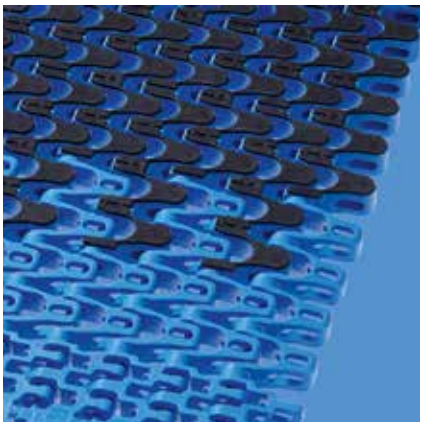

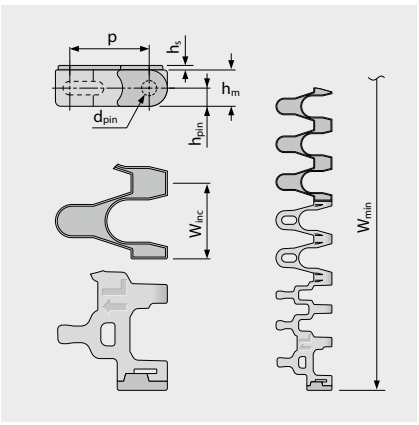

Variant specific dimensions [mm (in)]

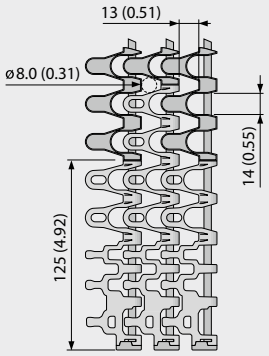

Belt dimensions

	p	d_{pin}	h_m	h_{pin}	h_s	W_{min}	W_{inc}	W_{tol}	Minimum flex radii[1]				
	Pitch	Pin Ø	Thickness	Pin position	Height	Width min.	Width Increment	Width tolerance [%]	r1 $C_c \times W_B$	r2	r3	r4	r5
mm	25.0	5.0	12.0	6.0	1.5	500.0	25.0	±0.3	1.4 x W_B	25.0	50.0	75.0	25.0
inch	0.98	0.2	0.47	0.24	0.06	19.69	0.98	±0.3	1.4 x W_B	0.98	1.97	2.95	0.98

W_B = Belt width, further information regarding r1 see page III-31

Available standard materials[3]

Belt		Pin		Rubber		Nominal belt pull, straight		Nominal belt pull, curve		Weight		Width deviation [%]	Temperature		Certificates[2]		
Material	Color	Material	Color	Material	Color	[N/mm]	[lb/ft]	[N]	[lb]	[kg/m²]	[lb/ft²]		[°C]	[°F]	FDA	EU	MHLW
PP	WT	PBT	UC	R7	BG	9	617	600	135	6.1	1.25	0.2	5/100	41/212	●	●	
PP	BL	PBT	BL	R7	BG	9	617	600	135	6.1	1.25	0.2	5/100	41/212	●	●	
PP	BL	PBT	BL	R7	BK	9	617	600	135	6.1	1.25	0.2	5/100	41/212	●	●	

■ BL (Blue), □ UC (Uncolored), □ WT (White)

All measurements and tolerances apply at 21 °C; for temperature deviations please see Prolink manual chapter 4.4 "Temperature influence".
All imperial dimensions (inches) are rounded off.

[1] Flex radii: r1 = side flex, r2 = front flex on roller, r3 = back flex on load bearing roller, r4 = back flex on Hold Down shoe, r5 = back flex on roller

[2] Complies with FDA 21 CFR | Complies with (EU) 10/2011 and (EC) 1935/2004 regulations regarding the raw materials used and the migration thresholds | Complies with Japanese MHLW Notification 370
● = available | – = not available | empty cells = not tested

[3] More materials and colors on request

S11 COMBO | **BELT TYPES**

Side flexing belt | Pitch 25 mm (0.98 in) | $C_c = 1.45$

S11/S5 ST-45 GRT CCW | 45 % Opening | Grid top | Counter clockwise or left hand curve

Combination of high belt pull capacity and small radii in one directional curve layouts | Excellent air circulation and drainage | 42 % contact area (Largest opening: Ø = 13 mm/0.51 in) | Lattice shaped surface | SS pins for high stiffness | Collapse factor (C_c) = 1.45

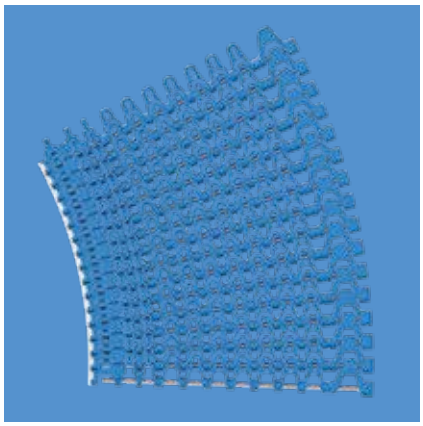

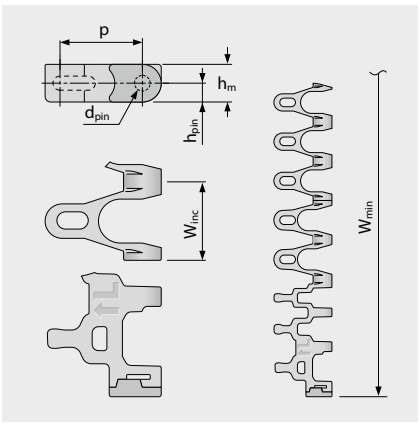

Variant specific dimensions [mm (in)]

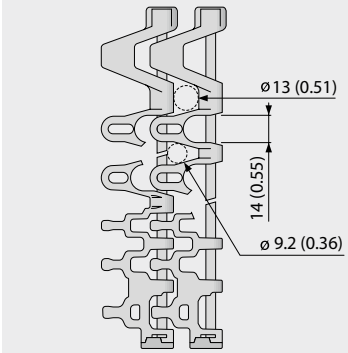

Belt dimensions

	p	d_{pin}	h_m	h_{pin}	h_s	W_{min}	W_{inc}	W_{tol}	Minimum flex radii[1]				
	Pitch	Pin Ø	Thickness	Pin position	Height	Width min.	Width Increment	Width tolerance [%]	r1 $C_c \times W_B$	r2	r3	r4	r5
mm	25.0	5.0	12.0	6.0	0.0	175.0	25.0	±0.3	1.45 x W_B	25.0	50.0	75.0	25.0
inch	0.98	0.2	0.47	0.24	0.0	6.89	0.98	±0.3	1.45 x W_B	0.98	1.97	2.95	0.98

W_B = Belt width, further information regarding r1 see page III-31

Available standard materials [3]

Belt		Pin	Nominal belt pull, straight		Nominal belt pull, curve		Weight		Width deviation	Temperature		Certificates[2]		
Material	Color	Material	[N/mm]	[lb/ft]	[N]	[lb]	[kg/m²]	[lb/ft²]	[%]	[°C]	[°F]	FDA	EU	MHLW
POM-CR	WT	SS	25	1713	2100	472	13.2	2.70	0.0	-45/90	-49/194	●	●	●
POM-CR	BL	SS	25	1713	2100	472	13.2	2.70	0.0	-45/90	-49/194	●	●	●
PP	WT	SS	18	1233	1200	270	10.2	2.09	0.2	5/100	41/212	●	●	●
PP	BL	SS	18	1233	1200	270	10.2	2.09	0.2	5/100	41/212	●	●	●
Mold to order														
PA*	BL	SS	20	1370	1680	378	13.0	2.66	0.6	-40/120	-40/248	●	●	●

* Values valid for dry applications (RH <50 %). Belts in PA material will absorb water in wet environments, causing them to expand and reduce the nominal belt pull capacity.

BL (Blue), WT (White)

All measurements and tolerances apply at 21 °C; for temperature deviations please see Prolink manual chapter 4.4 "Temperature influence".
All imperial dimensions (inches) are rounded off.

[1] Flex radii: r1 = side flex, r2 = front flex on roller, r3 = back flex on load bearing roller, r4 = back flex on Hold Down shoe, r5 = back flex on roller

[2] Complies with FDA 21 CFR | Complies with (EU) 10/2011 and (EC) 1935/2004 regulations regarding the raw materials used and the migration thresholds | Complies with Japanese MHLW Notification 370
● = available | – = not available | empty cells = not tested

[3] More materials and colors on request

MOVEMENT SYSTEMS

S11 SPR | Sprockets



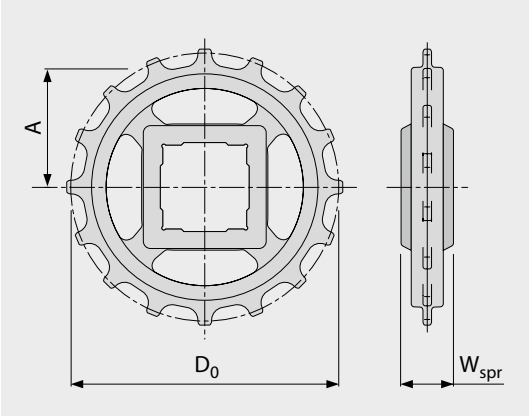

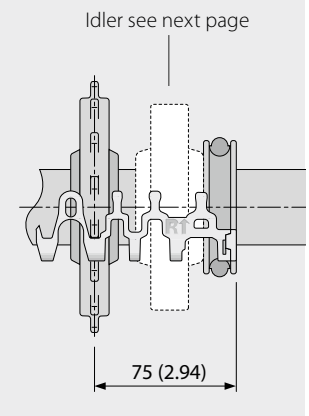

Main dimensions

Sprocket size (Number of teeth)		Z6	Z9	Z11	Z12	Z16	Z18	Z20
W_{spr}	mm	24.0	24.0	24.0	24.0	24.0	24.0	24.0
	inch	0.94	0.94	0.94	0.94	0.94	0.94	0.94
D_0	mm	49.6	72.6	88.0	95.8	127.2	142.8	158.5
	inch	1.95	2.86	3.46	3.77	5.01	5.62	6.24
A_{max}	mm	18.8	30.3	38.0	41.9	57.6	65.4	73.3
	inch	0.74	1.19	1.50	1.65	2.27	2.57	2.89
A_{min}	mm	16.3	28.5	36.5	40.5	56.5	64.4	72.4
	inch	0.64	1.12	1.44	1.59	2.22	2.54	2.85

Shaft bores (● = Round, ■ = Square; ❍ or ❑ = mold to order; * = not possible with S5 RG and G belts)

25	mm		● / ■*	●	● / ■	●	●	❍
30	mm		● / ■*	●	●	●	●	●
40	mm			■*	● / ■	❍ / ■	● / ■	❍ / ■
0.75	inch	●*						
1	inch		● / ❑*	●	● / ❑	●	❍	●
1.25	inch		❍ / ❑*	❍	●	●	❍	●
1.5	inch			■*	● / ■	● / ■	❍ / ■	● / ■

Material: PA, Color: LG

LG (Light gray)

All measurements and tolerances apply at 21 °C.
All imperial dimensions (inches) are rounded off.
For detailed sprocket and shaft dimensions see appendix 6.3
Number of sprockets (sprocket spacing distance) see chapter 3.2
Sprocket installation see chapter 5.2

S11 IDL | Idler

For side support and return roller without tooth engagement



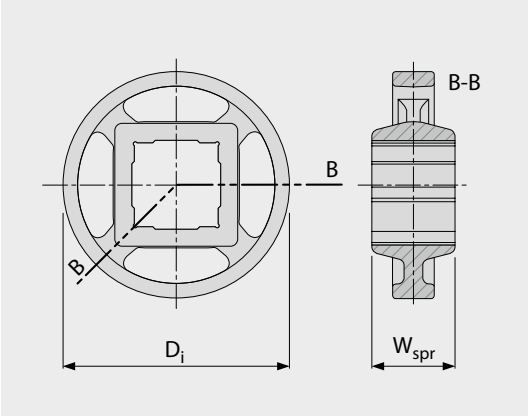

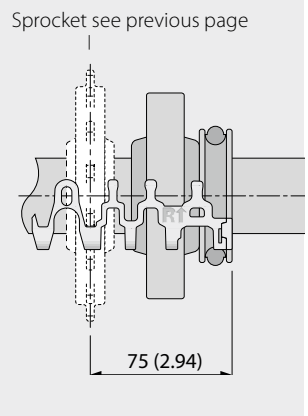

Main dimensions

Sprocket size (Number of teeth)		Z6	Z9	Z11	Z12	Z16	Z18	Z20
W_{spr}	mm	24.0	24.0	24.0	24.0	24.0	24.0	24.0
	inch	0.94	0.94	0.94	0.94	0.94	0.94	0.94
D_i	mm	31.7	56.1	72.2	80.3	112.3	128.2	144.1
	inch	1.25	2.21	2.84	3.16	4.42	5.05	5.67

Shaft bores (● = Round, ■ = Square; ❍ or ❑ = mold to order; * = not possible with S5 RG and G belts)

25	mm		● / ■*	●	● / ■	●	●	❍
30	mm		● / ■*	●	●	●	●	●
40	mm			■*	● / ■	❍ / ■	● / ■	❍ / ■
0.75	inch	●*						
1	inch		● / ❑*	●	● / ❑	●	❍	●
1.25	inch		❍ / ❑*	❍	●	●	❍	●
1.5	inch			■*	● / ■	● / ■	❍ / ■	● / ■

Material: PA, Color: LG

LG (Light gray)

All measurements and tolerances apply at 21 °C.
All imperial dimensions (inches) are rounded off.
For detailed shaft dimensions see appendix 6.3
Idler installation see chapter 5.2 (Sprocket installation)

S11-45 GRT PMC

Open version (45 %) base module for drainage



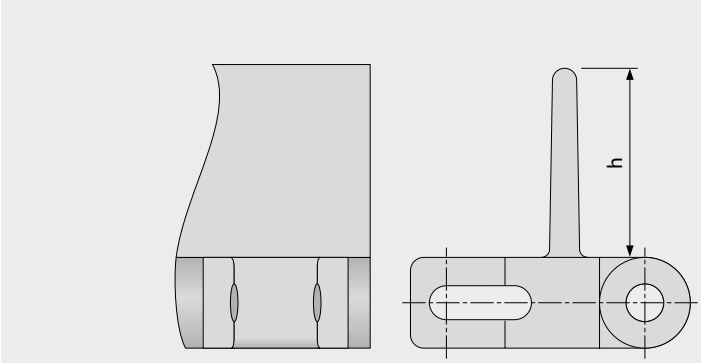

Basic data

Material	Color	Height (h)	
		25 mm 1 inch	50 mm 2 inch
PE	WT	●	●
POM	BL	●	●
POM	DB	mold to order	mold to order
POM	UC	mold to order	mold to order
POM	WT	●	●
PP	DB	mold to order	mold to order
PP	WT	●	●

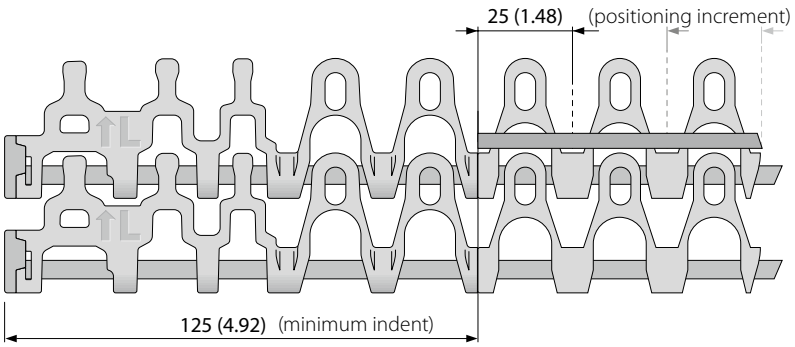

Molded width: 100 mm (3.9 in)

BL (Blue), DB (Dark blue), UC (Uncolored), WT (White)

All measurements and tolerances apply at 21 °C; for temperature deviations please see Prolink manual chapter 4.4 "Temperature influence".
All imperial dimensions (inches) are rounded off.
Note: Use of accessory in a belt may impact on the minimum design radii. Please see chapter 6.3 for further information.

Preferred travel direction

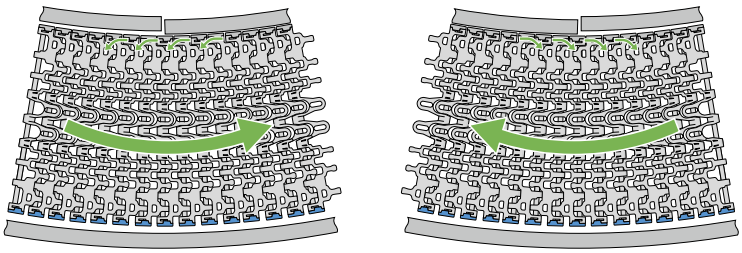

Curve conveyor

Curve direction S11-> CW (ClockWise) or CCW (Counter ClockWise)

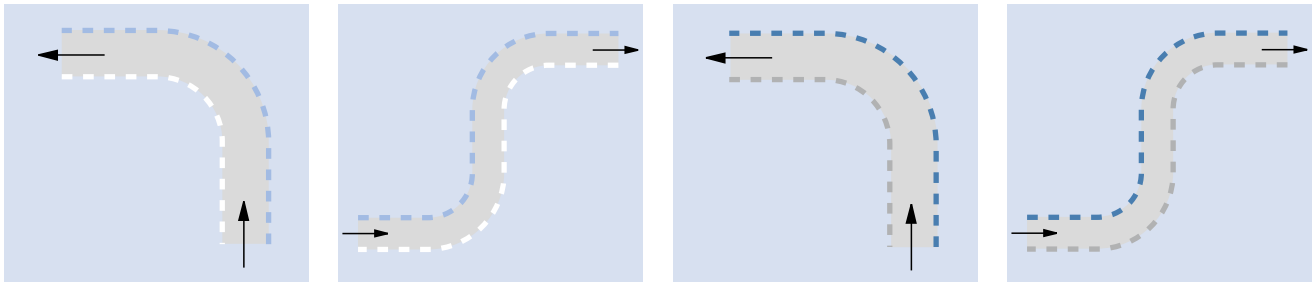

Curve direction S11/S5 ST Combo -> Belt CCW (Counter ClockWise)

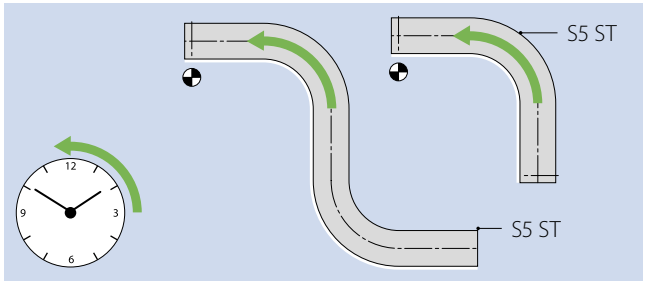

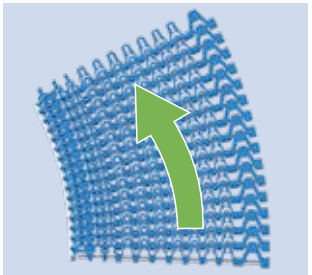

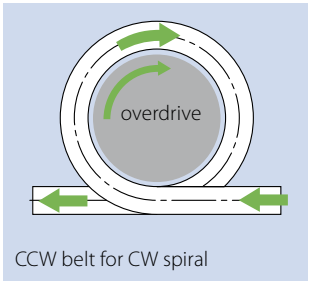

CCW belt for CW spiral

Sprocket installation

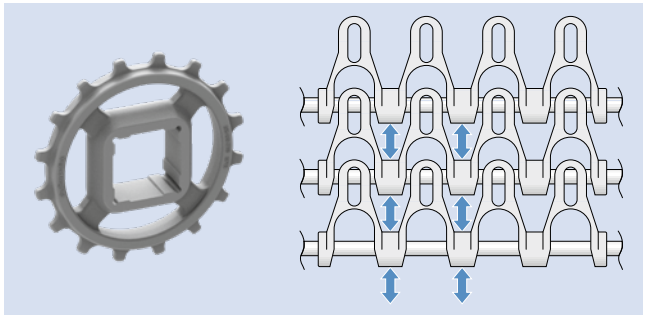

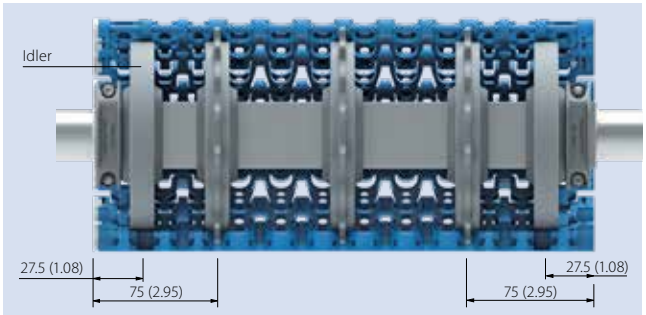



Further information in chapter 3 and 5

MOVEMENT SYSTEMS

siegling prolink
modular belts

SERIES 13

Straight running belts
Pitch 8 mm (0.31 in)

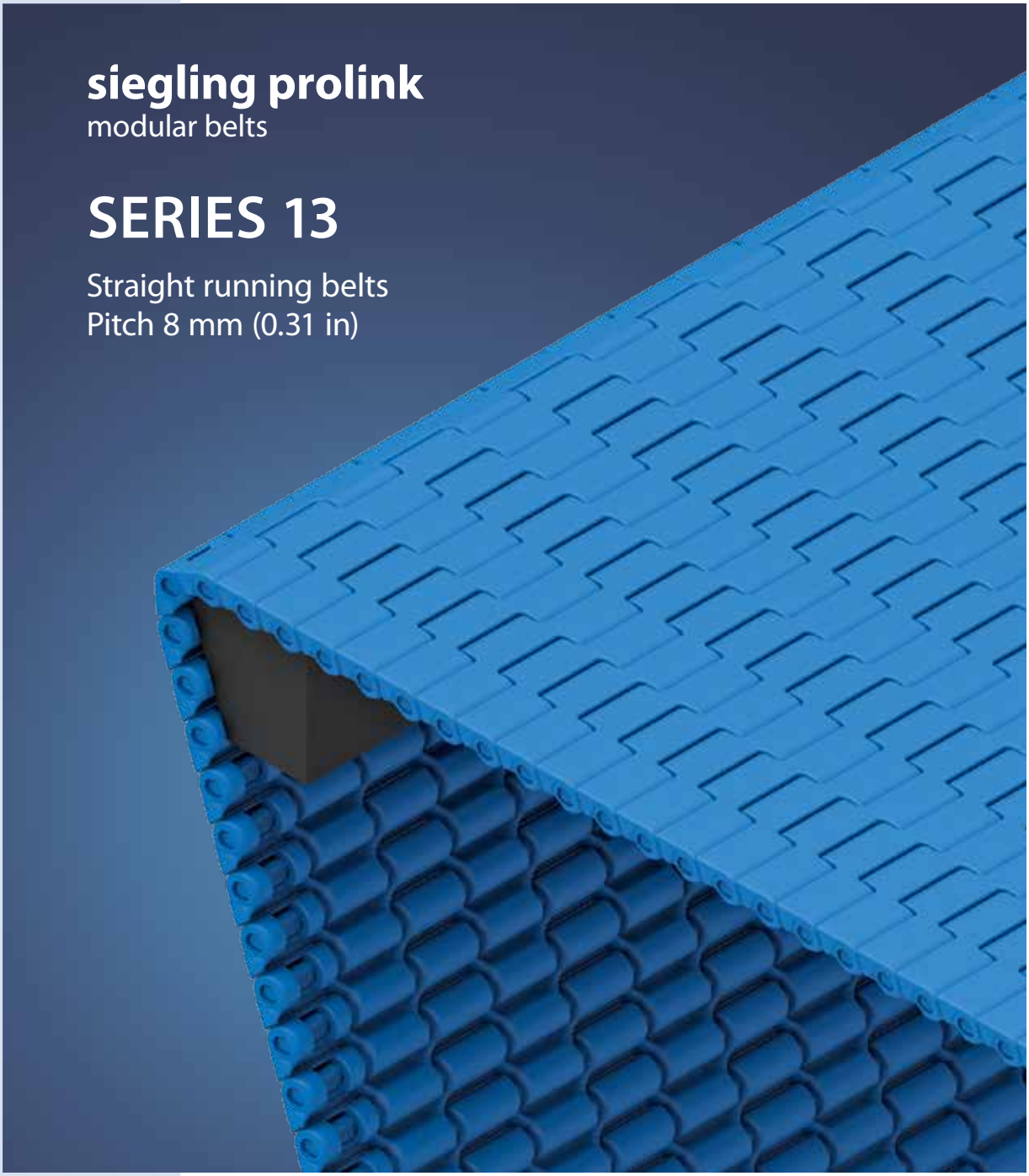

Belts for light-duty food and non-food nose bar applications

Side view scale 1:1

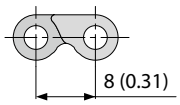

Design characteristics

- Micro pitch belt with small transfer gaps
- Designed to run over nosebars/knife edges or rollers with a radius down to 3 mm (0.12 in) allowing, precise transfer of even the smallest products
- Versatile for conveying, drying and cooling applications
- Optimal design of sprocket teeth, and belt underside provides superior sprocket engagement, safe belt tracking and favorable cleanability
- Belt and sprocket design ensures superior load transmission and belt pull capacity
- Headless pin making it very easy to install and remove the belt for maintenance

Basic data

Pitch	8 mm (0.31 in)
Belt width min.	102 mm (4 in)
Width increments	25.4 mm (1 in)
Hinge pins	3 mm (0.12 in) made of plastic (PLX)

Available surface pattern and opening area

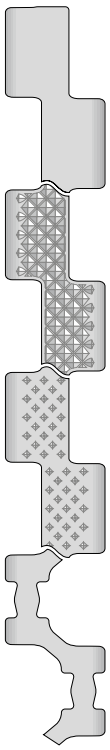

S13-0 FLT
Closed, smooth surface

S13-0 NPY
Closed surface
with negative pyramid pattern

S13-0 CTP
Closed surface and pointed studs

S13-34 FLT
Open (34 %), smooth surface

NSF Certified

NSF-compliant from these certified Forbo plants:
Huntersville (USA), Malacky (Slovakia), Tlalnepantla (Mexico)

Sprockets
In different sizes with round or square bore



Detail hinge pin
Headless pin with unique shoulder design ensures trouble free installation, maintenance and a secure pin retention

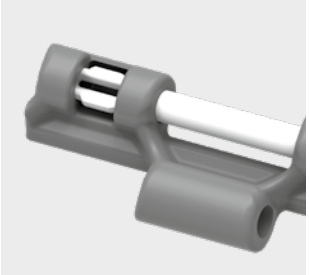

Detail nose bar
Narrow transfer gap ensures smooth transfer of small and delicate products

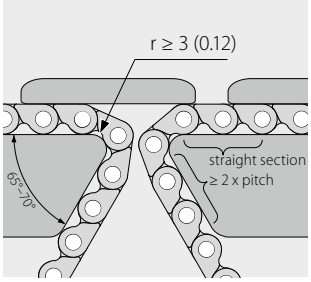

ProSnap
Quick-Release for easy opening and closing of the belt

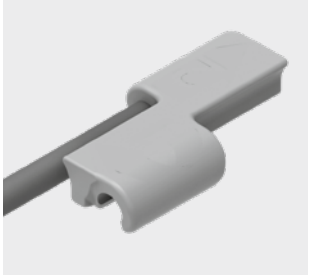

S13-0 FLT | 0 % Opening | Flat top

Closed, smooth surface | Flat top surface

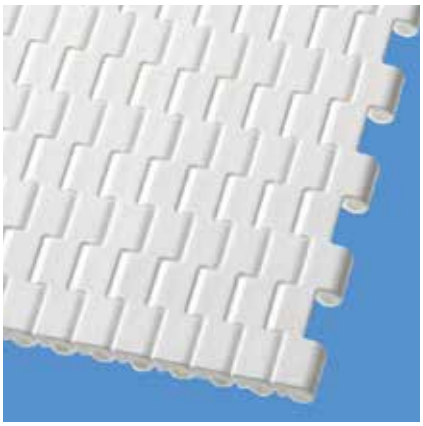

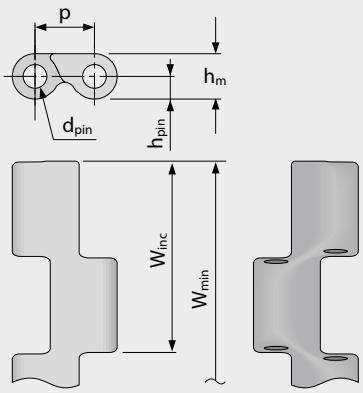

Belt dimensions

	p	d_{pin}	h_m	h_{pin}	h_s	W_{min}	W_{inc}	W_{tol}	Minimum flex radii[1]				
	Pitch	Pin Ø	Thickness	Pin position	Height	Width min.	Width Increment	Width tolerance [%]	r1 C_c x W_B	r2	r3	r4	r5
mm	8.0	3.0	6.0	3.0	0.0	101.6	25.4	±0.2	–	3.0	16.0	24.0	8.0
inch	0.31	0.12	0.24	0.12	0.0	4.0	1.0	±0.2	–	0.12	0.63	0.94	0.31

Available standard materials [3]

Belt		Pin		Nominal belt pull, straight		Weight		Width deviation	Temperature		Certificates[2]		
Material	Color	Material	Color	[N/mm]	[lb/ft]	[kg/m²]	[lb/ft²]	[%]	[°C]	[°F]	FDA	EU	MHLW
PA*	BL	PLX	BL	4	274	5.1	1.04	1.38	-40/120	-40/248	●	●	●
POM	WT	PLX	BL	4	274	5.9	1.21	0.23	-45/90	-49/194	●	●	●
POM	BL	PLX	BL	4	274	5.9	1.21	0.23	-45/90	-49/194	●	●	●
Mold to order belts													
PA*	LG	PLX	BL	4	274	5.1	1.04	1.38	-40/120	-40/248	●	●	●
PA-HT	BL	PLX	BL	4	274	5.7	1.17	1.77	-30/155	-22/311	●	●	●
PXX-HC	BK	PLX	BL	2	137	5.2	1.07	0.89	5/100	41/212	–	–	

Mold to width available in: 102 mm (4.0 in), 152 mm (6.0 in), 203 mm (8.0 in), 305 mm (12.0 in)

* Values valid for dry applications (RH <50 %). Belts in PA material will absorb water in wet environments, causing them to expand and reduce the nominal belt pull capacity.

■ BK (Black), ■ BL (Blue), ■ LG (Light gray), □ WT (White)

All measurements and tolerances apply at 21 °C; for temperature deviations please see Prolink manual chapter 4.4 "Temperature influence".
All imperial dimensions (inches) are rounded off.

[1] Flex radii: r1 = side flex, r2 = front flex on roller, r3 = back flex on load bearing roller, r4 = back flex on Hold Down shoe, r5 = back flex on roller

[2] Complies with FDA 21 CFR | Complies with (EU) 10/2011 and (EC) 1935/2004 regulations regarding the raw materials used and the migration thresholds | Complies with Japanese MHLW Notification 370
● = available | – = not available | empty cells = not tested

[3] More materials and colors on request

S13-0 NPY | 0 % Opening | Negative pyramid

Closed surface with negative pyramid pattern | Provides superb release characteristics when conveying wet or sticky products | 61 % contact area

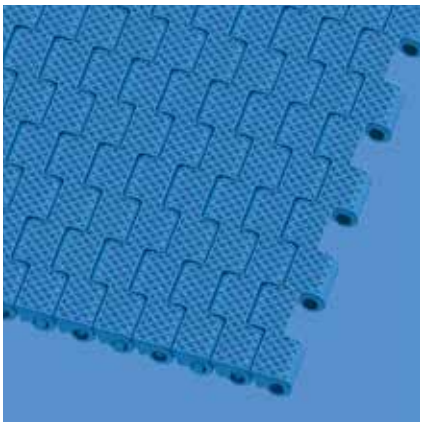

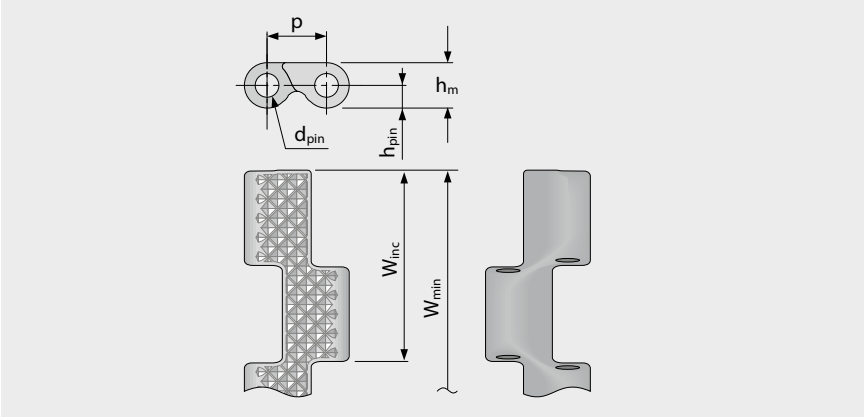

Belt dimensions

	p	d_{pin}	h_m	h_{pin}	h_s	W_{min}	W_{inc}	W_{tol}	Minimum flex radii[1]			
	Pitch	Pin Ø	Thickness	Pin position	Height	Width min.	Width Increment	Width tolerance [%]	r1 C_c x W_B	r2	r3	r4	r5
mm	8.0	3.0	6.0	3.0	0.0	101.6	25.4	±0.2	–	3.0	16.0	24.0	8.0
inch	0.31	0.12	0.24	0.12	0.0	4.0	1.0	±0.2	–	0.12	0.63	0.94	0.31

Available standard materials [3]

Belt		Pin		Nominal belt pull, straight		Weight		Width deviation	Temperature		Certificates[2]		
Material	Color	Material	Color	[N/mm]	[lb/ft]	[kg/m²]	[lb/ft²]	[%]	[°C]	[°F]	FDA	EU	MHLW
POM	BL	PLX	BL	4	274	5.9	1.21	0.23	-45/90	-49/194	●	●	●

Mold to width available in: 102 mm (4.0 in), 152 mm (6.0 in), 203 mm (8.0 in), 305 mm (12.0 in)

BL (Blue)

All measurements and tolerances apply at 21 °C; for temperature deviations please see Prolink manual chapter 4.4 "Temperature influence".
All imperial dimensions (inches) are rounded off.

[1] Flex radii: r1 = side flex, r2 = front flex on roller, r3 = back flex on load bearing roller, r4 = back flex on Hold Down shoe, r5 = back flex on roller

[2] Complies with FDA 21 CFR | Complies with (EU) 10/2011 and (EC) 1935/2004 regulations regarding the raw materials used and the migration thresholds | Complies with Japanese MHLW Notification 370

● = available | – = not available | empty cells = not tested

[3] More materials and colors on request

S13-0 CTP | 0 % Opening | Cone top (pointed studs)

Closed surface and pointed studs | Cone top surface pattern for superior grip

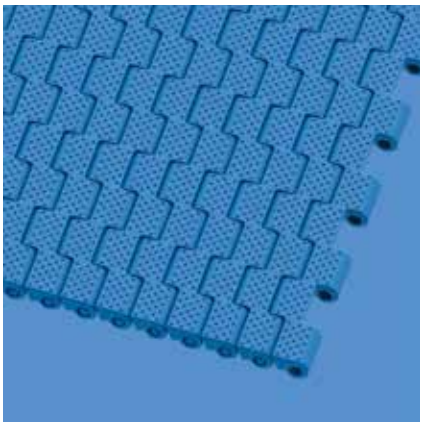

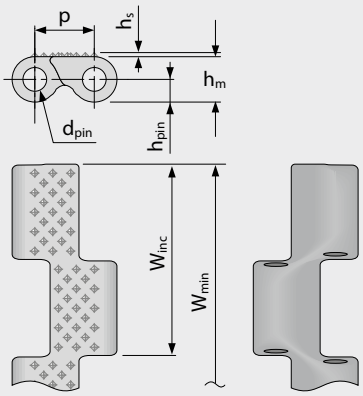

Belt dimensions

	p	d_{pin}	h_m	h_{pin}	h_s	W_{min}	W_{inc}	W_{tol}	Minimum flex radii[1]				
	Pitch	Pin Ø	Thickness	Pin position	Height	Width min.	Width Increment	Width tolerance [%]	r1 C_c x W_B	r2	r3	r4	r5
mm	8.0	3.0	6.0	3.0	0.4	101.6	25.4	±0.2	–	3.0	16.0	24.0	8.0
inch	0.31	0.12	0.24	0.12	0.02	4.0	1.0	±0.2	–	0.12	0.63	0.94	0.31

Available standard materials [3]

Belt		Pin		Nominal belt pull, straight		Weight		Width deviation	Temperature		Certificates[2]		
Material	Color	Material	Color	[N/mm]	[lb/ft]	[kg/m²]	[lb/ft²]	[%]	[°C]	[°F]	FDA	EU	MHLW
POM	BL	PLX	BL	4	274	5.9	1.21	0.23	-45/90	-49/194	●	●	●
Mold to order belts													
PA*	BL	PLX	BL	4	274	5.1	1.04	1.38	-40/120	-40/248	●	●	●

Mold to width available in: 305 mm (12.0 in)

* Values valid for dry applications (RH <50 %). Belts in PA material will absorb water in wet environments, causing them to expand and reduce the nominal belt pull capacity.

BL (Blue)

All measurements and tolerances apply at 21 °C; for temperature deviations please see Prolink manual chapter 4.4 "Temperature influence".
All imperial dimensions (inches) are rounded off.

[1] Flex radii: r1 = side flex, r2 = front flex on roller, r3 = back flex on load bearing roller, r4 = back flex on Hold Down shoe, r5 = back flex on roller

[2] Complies with FDA 21 CFR | Complies with (EU) 10/2011 and (EC) 1935/2004 regulations regarding the raw materials used and the migration thresholds | Complies with Japanese MHLW Notification 370
● = available | – = not available | empty cells = not tested

[3] More materials and colors on request

S13-34 FLT | 34 % Opening | Flat top

Open area (34 %) for excellent air circulation and drainage | 47 % contact area (Largest opening: 11.4 x 4.6 mm/0.45 x 0.18 in); Smooth surface | Easy-to-clean

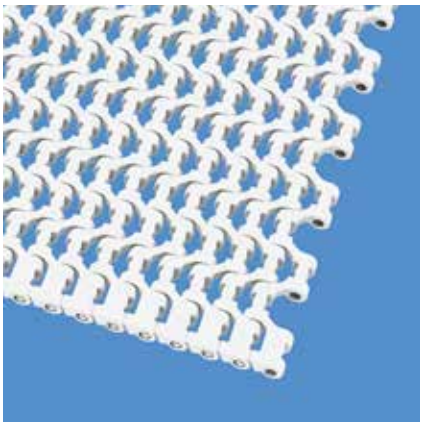

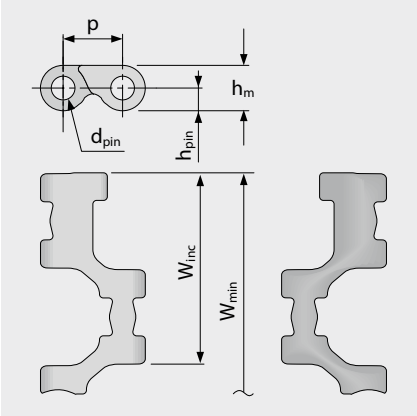

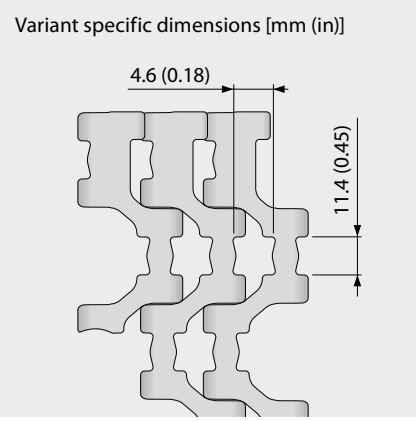

Belt dimensions

	p	d_{pin}	h_m	h_{pin}	h_s	W_{min}	W_{inc}	W_{tol}	Minimum flex radii[1]				
	Pitch	Pin Ø	Thickness	Pin position	Height	Width min.	Width Increment	Width tolerance [%]	r1 C_c x W_B	r2	r3	r4	r5
mm	8.0	3.0	6.0	3.0	0.0	101.6	25.4	±0.2	–	3.0	16.0	24.0	8.0
inch	0.31	0.12	0.24	0.12	0.0	4.0	1.0	±0.2	–	0.12	0.63	0.94	0.31

Available standard materials [3]

Belt		Pin		Nominal belt pull, straight		Weight		Width deviation	Temperature		Certificates[2]		
Material	Color	Material	Color	[N/mm]	[lb/ft]	[kg/m²]	[lb/ft²]	[%]	[°C]	[°F]	FDA	EU	MHLW
PA*	BL	PLX	BL	4	274	3.7	0.76	1.38	-40/120	-40/248	●	●	●
POM	WT	PLX	BL	4	274	4.3	0.88	0.23	-45/90	-49/194	●	●	●
POM	BL	PLX	BL	4	274	4.3	0.88	0.23	-45/90	-49/194	●	●	●
Mold to order belts													
PA-HT	BL	PLX	BL	4	274	4.2	0.86	1.38	-30/155	-22/311	●	●	●

Mold to width available in: 305 mm (12.0 in)

* Values valid for dry applications (RH <50 %). Belts in PA material will absorb water in wet environments, causing them to expand and reduce the nominal belt pull capacity.

■ BL (Blue), □ WT (White)

All measurements and tolerances apply at 21 °C; for temperature deviations please see Prolink manual chapter 4.4 "Temperature influence".
All imperial dimensions (inches) are rounded off.

[1] Flex radii: r1 = side flex, r2 = front flex on roller, r3 = back flex on load bearing roller, r4 = back flex on Hold Down shoe, r5 = back flex on roller

[2] Complies with FDA 21 CFR | Complies with (EU) 10/2011 and (EC) 1935/2004 regulations regarding the raw materials used and the migration thresholds | Complies with Japanese MHLW Notification 370

● = available | – = not available | empty cells = not tested

[3] More materials and colors on request

S13 SPR | Sprockets

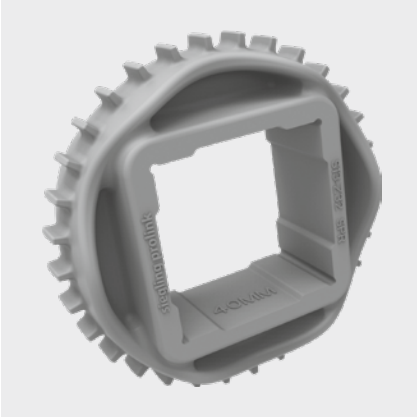

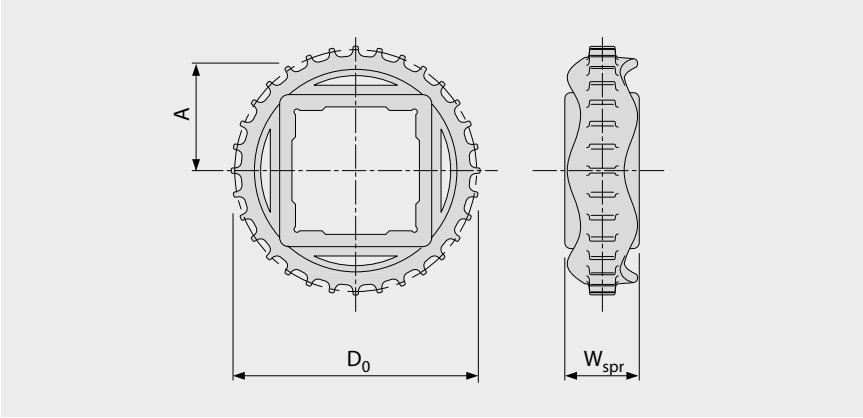

Main dimensions

Sprocket size (Number of teeth)		Z15	Z24	Z32	Z36	Z48
W_{spr}	mm	25.0	25.0	25.0	25.0	25.0
	inch	0.98	0.98	0.98	0.98	0.98
D_0	mm	39.1	62.3	82.9	93.2	124.2
	inch	1.54	2.45	3.26	3.67	4.89
A_{max}	mm	16.6	28.2	38.5	43.6	59.1
	inch	0.65	1.11	1.52	1.72	2.33
A_{min}	mm	16.2	27.9	38.3	43.4	59.0
	inch	0.64	1.10	1.51	1.71	2.32

Shaft bores (● = Round, ■ = Square)

20	mm	● / ■				
25	mm		● / ■	●		
30	mm		■			
40	mm			■	■	■
0.75	inch	●				
1	inch		● / ■	●		
1.5	inch			■		■

Material: PA, Color: LG

LG (Light gray)

All measurements and tolerances apply at 21 °C.
All imperial dimensions (inches) are rounded off.
For detailed sprocket and shaft dimensions see appendix 6.3
Number of sprockets (sprocket spacing distance) see chapter 3.2

S13-0 FLT PSP | ProSnap

Quick-Release for easy, quick and toolless opening and closing of the belt | One pin solution for entire belt width



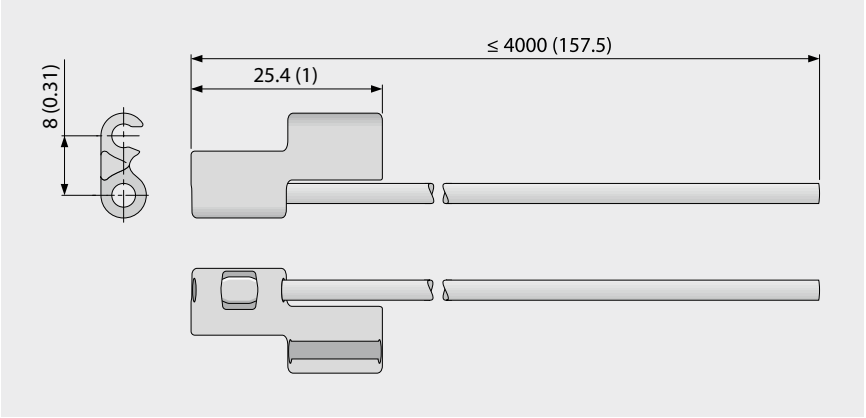

Basic data

Material	Color	Pin material/length	
		≤ 610 mm (24 inch)	> 610 mm (24 inch) ≤ 4000 mm (157 inch)
POM	LB	PLX	PBT
Mold to order belts			
POM-MD	BL	PLX	PBT

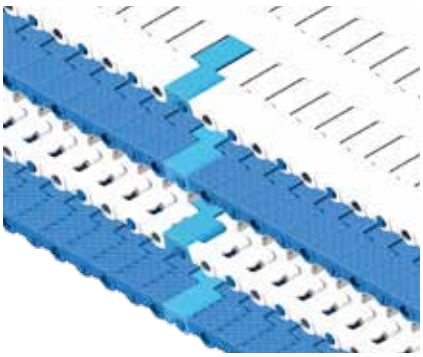

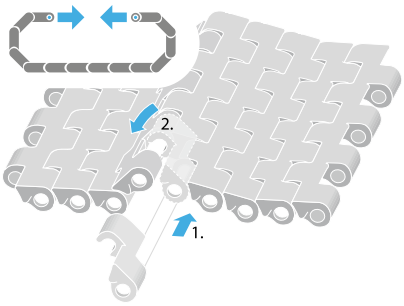

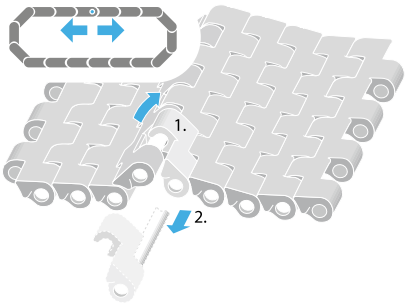

BL (Blue), LB (Light blue)

All measurements and tolerances apply at 21 °C; for temperature deviations please see Prolink manual chapter 4.4 "Temperature influence".
All imperial dimensions (inches) are rounded off.
Note: Use of accessory in a belt may impact on the minimum design radii. Please see chapter 6.3 for further information.

siegling prolink
modular belts

SERIES 14

Straight running belts
Pitch 12.7 mm (0.50 in)

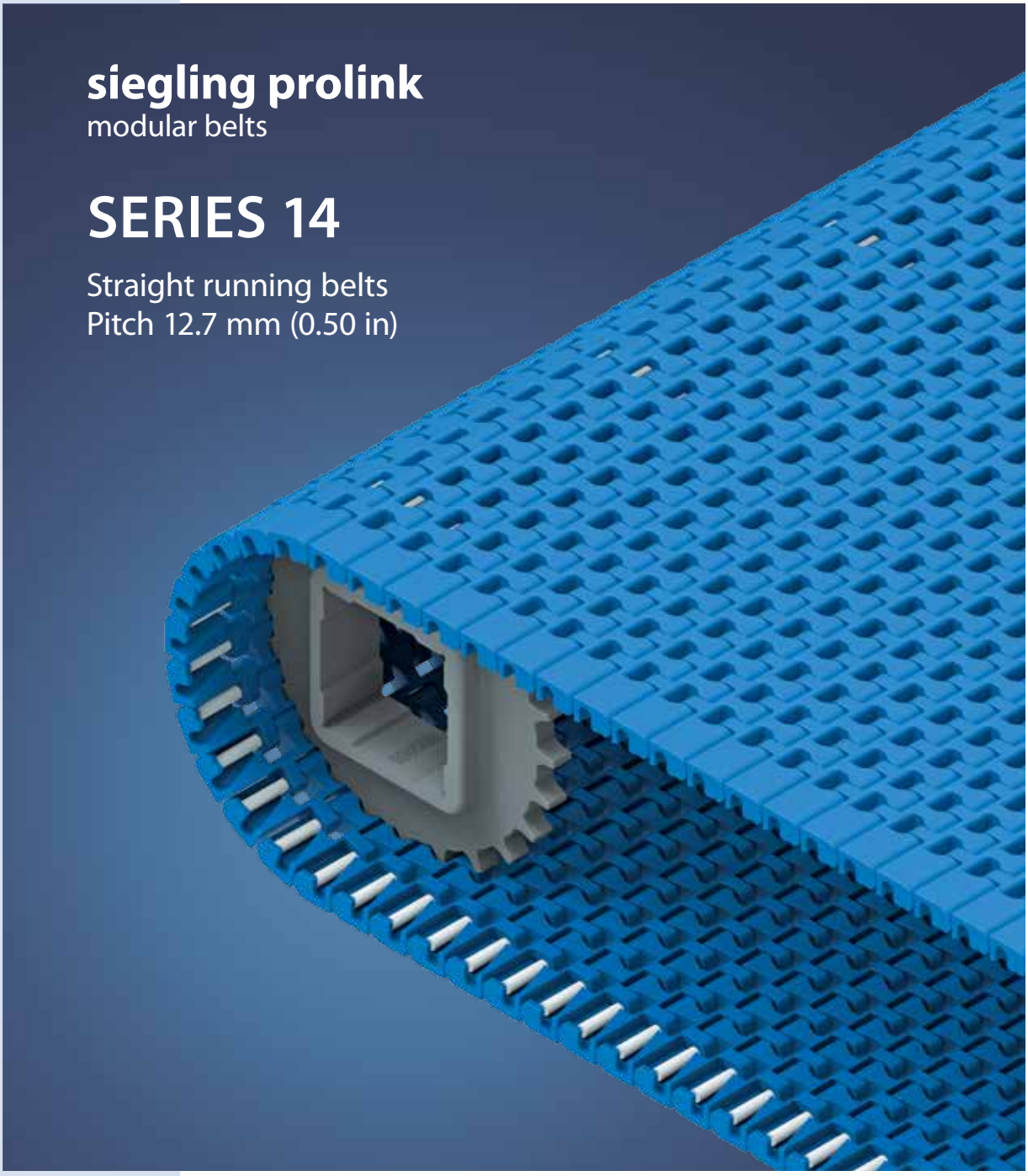

SERIES 14 | **OVERVIEW**

Straight running belts | Pitch 12.7 mm (0.50 in)

Belts for medium-duty food and non-food applications

Side view scale 1:1

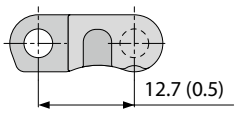

Available surface pattern and opening area

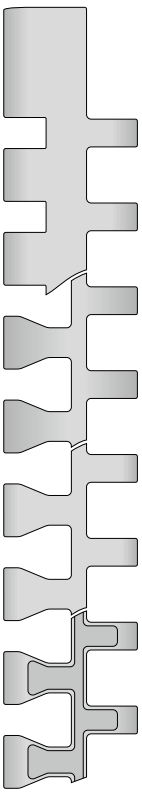

S14-0 FLT
Closed, smooth surface

S14-25 FLT
Open (25 %), smooth surface

S14-25 CUT
Open (25 %) surface with curve top surface

S14-25 FRT1
Open (25 %) surface with friction top

Design characteristics

- Mini pitch belt with small transfer gap
- Robust design guarantees superior durability and high belt pull capacity
- Design for smooth run on 19 mm (0.75 in) nose bar
- Headless pin system making it easy to install and remove the belt for maintenance
- Closed, solid belt edge to prevent belt edge damages

Basic data

Pitch	12.7 mm (0.50 in)
Belt width min.	76.2 mm (3.0 in)
Width increments	12.7 mm (0.50 in)
Hinge pins	3.4 mm (0.13 in) made of plastic (PP, PBT, PE). One-piece up to a belt width of 4000 mm (157.5 in).

NSF Certified

NSF-compliant from these certified Forbo plants: Huntersville (USA), Malacky (Slovakia), Tlalnepantla (Mexico)

Sprockets
in different sizes with round or square bore



Profiles
in different heights and designs for inclines

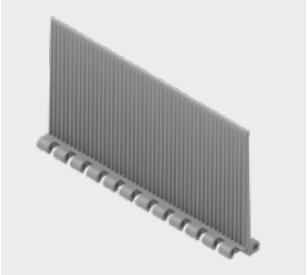

Detail hinge pin
Headless one-piece pin with unique retention system ensures trouble free installation and maintenance

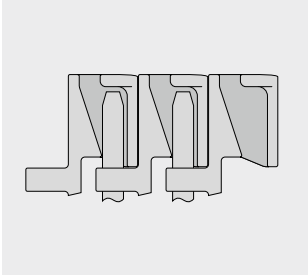

S14-0 FLT | 0 % Opening | Flat top

Closed, smooth surface | Flat top surface

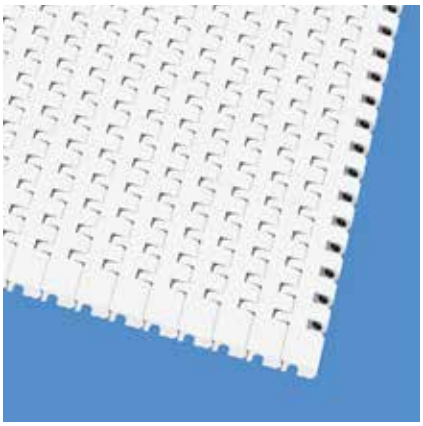

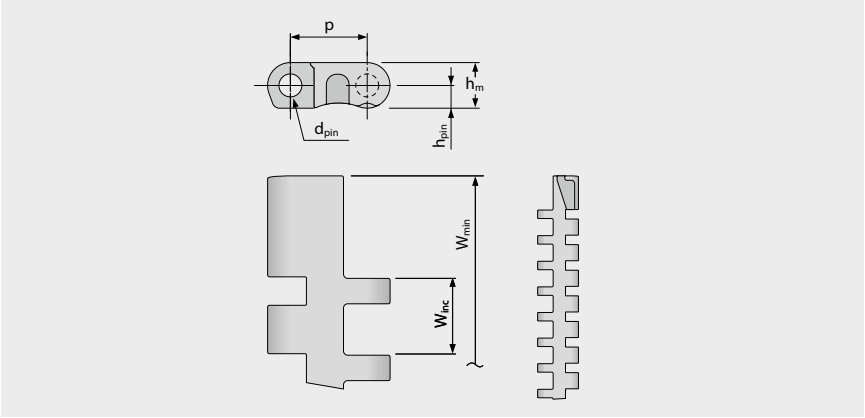

Belt dimensions

	p	d_{pin}	h_m	h_{pin}	h_s	W_{min}	W_{inc}	W_{tol}	Minimum flex radii[1]				
	Pitch	Pin Ø	Thickness	Pin position	Height	Width min.	Width Increment	Width tolerance [%]	r1 C_c x W_B	r2	r3	r4	r5
mm	12.7	3.4	7.5	3.8	0.0	76.2	12.7	±0.20	–	9.5	25.4	38.1	12.7
inch	0.5	0.13	0.3	0.15	0.0	3.0	0.5	±0.20	–	0.38	1.0	1.5	0.5

Available standard materials [3]

Belt		Pin		Nominal belt pull, straight		Weight		Width deviation	Temperature		Certificates[2]		
Material	Color	Material	Color	[N/mm]	[lb/ft]	[kg/m²]	[lb/ft²]	[%]	[°C]	[°F]	FDA	EU	MHLW
PE	BL	PE	WT	6.5	445	5.0	0.96	-0.13	-70/65	-94/149	●	●	●
PE	WT	PE	WT	6.5	445	5.0	0.96	-0.13	-70/65	-94/149	●	●	●
POM	BL	PBT	UC	24	1645	7.5	1.41	0.0	-45/90	-49/194	●	●	●
POM	WT	PBT	UC	24	1645	7.5	1.41	0.0	-45/90	-49/194	●	●	●
PP	BL	PP	WT	9	617	4.8	1.0	0.43	5/100	41/212	●	●	●
PP	WT	PP	WT	9	617	4.8	1.0	0.43	5/100	41/212	●	●	●

■ BL (Blue), □ UC (Uncolored), □ WT (White)

All measurements and tolerances apply at 21 °C; for temperature deviations please see Prolink manual chapter 4.4 "Temperature influence".
All imperial dimensions (inches) are rounded off.

[1] Flex radii: r1 = side flex, r2 = front flex on roller, r3 = back flex on load bearing roller, r4 = back flex on Hold Down shoe, r5 = back flex on roller

[2] Complies with FDA 21 CFR | Complies with (EU) 10/2011 and (EC) 1935/2004 regulations regarding the raw materials used and the migration thresholds | Complies with Japanese MHLW Notification 370

● = available | – = not available | empty cells = not tested

[3] More materials and colors on request

S14-25 FLT | 25 % Opening | Flat top

Open version (25 %) for excellent air circulation and drainage | 52 % contact area (Largest opening: 8.2 x 2.7 mm/0.32 x 0.11 in) | Smooth surface

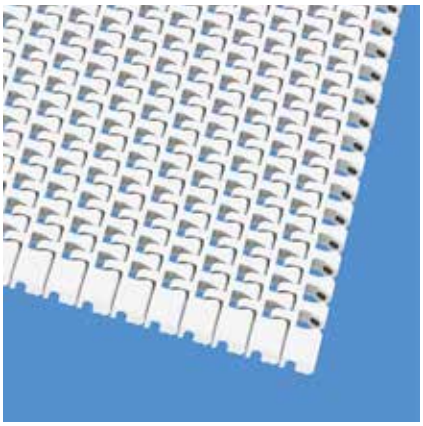

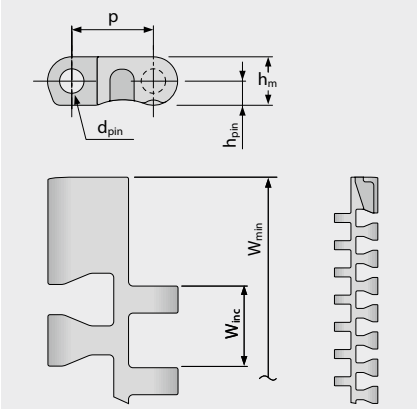

Variant specific dimensions [mm (in)]

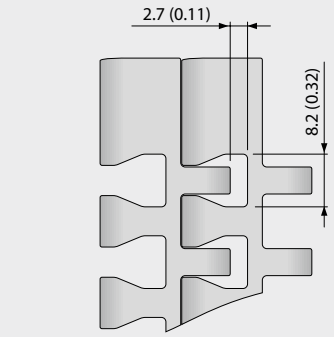

Belt dimensions

	p	d_{pin}	h_m	h_{pin}	h_s	W_{min}	W_{inc}	W_{tol}	Minimum flex radii[1]				
	Pitch	Pin Ø	Thickness	Pin position	Height	Width min.	Width Increment	Width tolerance [%]	r1 C_c x W_B	r2	r3	r4	r5
mm	12.7	3.4	7.5	3.8	0.0	76.2	12.7	±0.20	–	9.5	25.4	38.1	12.7
inch	0.5	0.13	0.3	0.15	0.0	3.0	0.5	±0.20	–	0.38	1.0	1.5	0.5

Available standard materials [3]

Belt		Pin		Nominal belt pull, straight		Weight		Width deviation	Temperature		Certificates[2]		
Material	Color	Material	Color	[N/mm]	[lb/ft]	[kg/m²]	[lb/ft²]	[%]	[°C]	[°F]	FDA	EU	MHLW
PE	BL	PE	WT	6.5	445	4.7	0.96	-0.13	-70/65	-94/149	●	●	●
POM	BL	PBT	UC	24	1645	7.0	1.41	0.0	-45/90	-49/194	●	●	●
POM	WT	PBT	UC	24	1645	7.0	1.41	0.0	-45/90	-49/194	●	●	●
PP	BL	PP	WT	9	617	4.5	1.0	0.43	5/100	41/212	●	●	●
PP	WT	PP	WT	9	617	4.5	1.0	0.43	5/100	41/212	●	●	●
Mold to order belts													
PA*	BL	PBT	UC	22	1507	5.8	1.19	0.92	-40/120	-40/248	●	●	●
PE	WT	PE	WT	6.5	445	4.7	0.96	-0.13	-70/65	-94/149	●	●	●

* Values valid for dry applications (RH <50 %). Belts in PA material will absorb water in wet environments, causing them to expand and reduce the nominal belt pull capacity.

BL (Blue), UC (Uncolored), WT (White)

All measurements and tolerances apply at 21 °C; for temperature deviations please see Prolink manual chapter 4.4 "Temperature influence".
All imperial dimensions (inches) are rounded off.

[1] Flex radii: r1 = side flex, r2 = front flex on roller, r3 = back flex on load bearing roller, r4 = back flex on Hold Down shoe, r5 = back flex on roller

[2] Complies with FDA 21 CFR | Complies with (EU) 10/2011 and (EC) 1935/2004 regulations regarding the raw materials used and the migration thresholds | Complies with Japanese MHLW Notification 370
● = available | – = not available | empty cells = not tested

[3] More materials and colors on request

S14-25 CUT | 25 % Opening | Curved top

Open version (25 %) for excellent air circulation and drainage | 26 % contact area (Largest opening: 8.2 x 2.7 mm/0.32 x 0.11 in) | Curved top

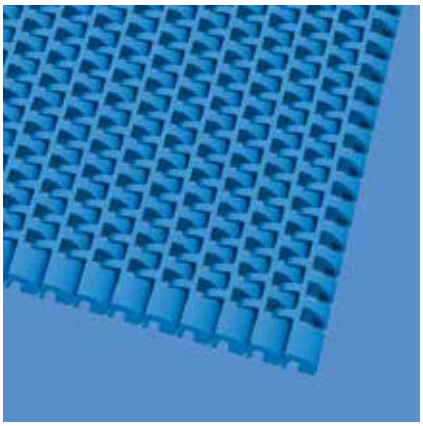

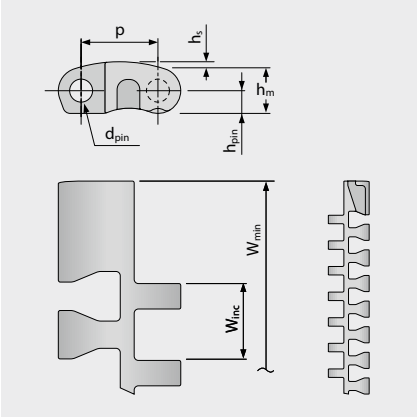

Variant specific dimensions [mm (in)]

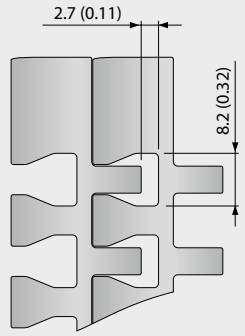

Belt dimensions

	p	d_{pin}	h_m	h_{pin}	h_s	W_{min}	W_{inc}	W_{tol}	Minimum flex radii[1]			
	Pitch	Pin Ø	Thickness	Pin position	Height	Width min.	Width Increment	Width tolerance [%]	r1 C_c x W_B	r2	r3	r4	r5
mm	12.7	3.4	7.5	3.8	1.1	76.2	12.7	±0.20	–	9.5	25.4	38.1	12.7
inch	0.5	0.13	0.3	0.15	0.04	3.0	0.5	±0.20	–	0.38	1.0	1.5	0.5

Available standard materials [3]

Belt		Pin		Nominal belt pull, straight		Weight		Width deviation	Temperature		Certificates[2]		
Material	Color	Material	Color	[N/mm]	[lb/ft]	[kg/m²]	[lb/ft²]	[%]	[°C]	[°F]	FDA	EU	MHLW
POM	BL	PBT	UC	24	1645	7.3	1.5	0.0	-45/90	-49/194	●	●	●
Mold to order belts													
PP	BL	PP	WT	9	617	4.8	0.98	0.43	5/100	41/212	●	●	●

BL (Blue), UC (Uncolored), WT (White)

All measurements and tolerances apply at 21 °C; for temperature deviations please see Prolink manual chapter 4.4 "Temperature influence".
All imperial dimensions (inches) are rounded off.

[1] Flex radii: r1 = side flex, r2 = front flex on roller, r3 = back flex on load bearing roller, r4 = back flex on Hold Down shoe, r5 = back flex on roller

[2] Complies with FDA 21 CFR | Complies with (EU) 10/2011 and (EC) 1935/2004 regulations regarding the raw materials used and the migration thresholds | Complies with Japanese MHLW Notification 370
● = available | – = not available | empty cells = not tested

[3] More materials and colors on request

S14-25 FRT1 | 25 % Opening | Friction top (Design 1)

Open version (25 %) for excellent air circulation and drainage with flat integrated friction pads (FRT1) for high grip | 32 % contact area | Version only available without FRT1 structure at the side (17 mm indent)

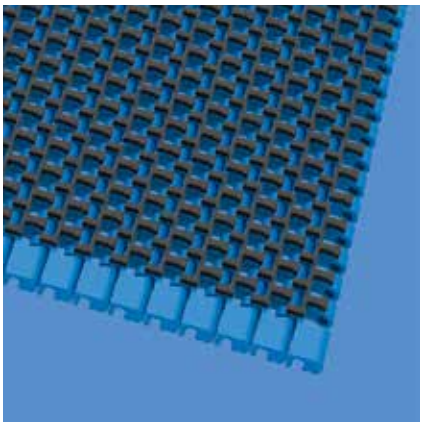

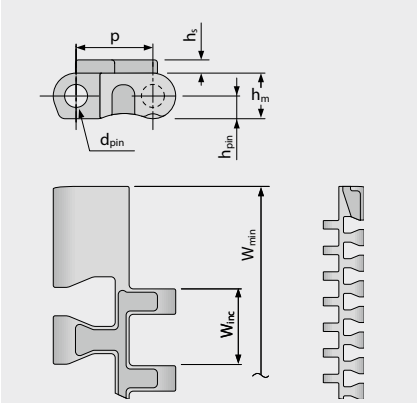

Variant specific dimensions [mm (in)]

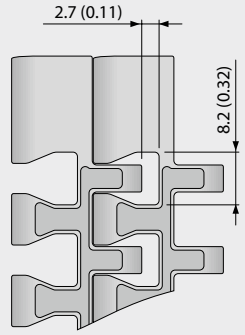

Belt dimensions

	p	d_{pin}	h_m	h_{pin}	h_s	W_{min}	W_{inc}	W_{tol}	Minimum flex radii[1]				
	Pitch	Pin Ø	Thickness	Pin position	Height	Width min.	Width Increment	Width tolerance [%]	r1 C_c x W_B	r2	r3	r4	r5
mm	12.7	3.4	7.5	3.8	2.2	76.2	12.7	±0.20	–	9.5	25.4	38.1	12.7
inch	0.5	0.13	0.3	0.15	0.09	3.0	0.5	±0.20	–	0.38	1.0	1.5	0.5

Available standard materials [3]

Belt		Pin		Rubber		Nominal belt pull, straight		Weight		Width deviation	Temperature		Certificates[2]		
Material	Color	Material	Color	Material	Color	[N/mm]	[lb/ft]	[kg/m²]	[lb/ft²]	[%]	[°C]	[°F]	FDA	EU	MHLW
PP	BL	PP	WT	R7	BK	9	617	5.1	1.05	0.43	5/100	41/212	●	●	
PP	WT	PP	WT	R7	BG	9	617	5.1	1.05	0.43	5/100	41/212	●	●	

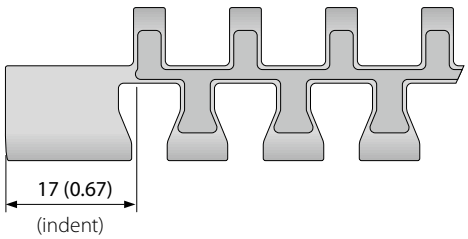

BG (Beige), BK (Black), BL (Blue), WT (White)

All measurements and tolerances apply at 21 °C; for temperature deviations please see Prolink manual chapter 4.4 "Temperature influence".
All imperial dimensions (inches) are rounded off.

[1] Flex radii: r1 = side flex, r2 = front flex on roller, r3 = back flex on load bearing roller, r4 = back flex on Hold Down shoe, r5 = back flex on roller

[2] Complies with FDA 21 CFR | Complies with (EU) 10/2011 and (EC) 1935/2004 regulations regarding the raw materials used and the migration thresholds | Complies with Japanese MHLW Notification 370
● = available | – = not available | empty cells = not tested

[3] More materials and colors on request

S14 SPR | Sprockets

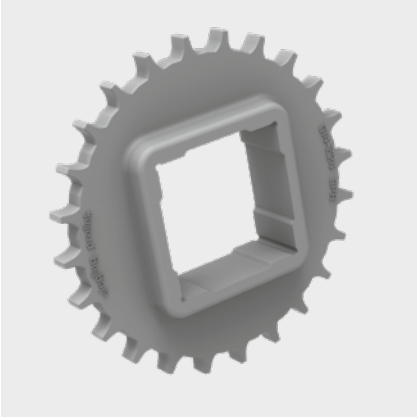

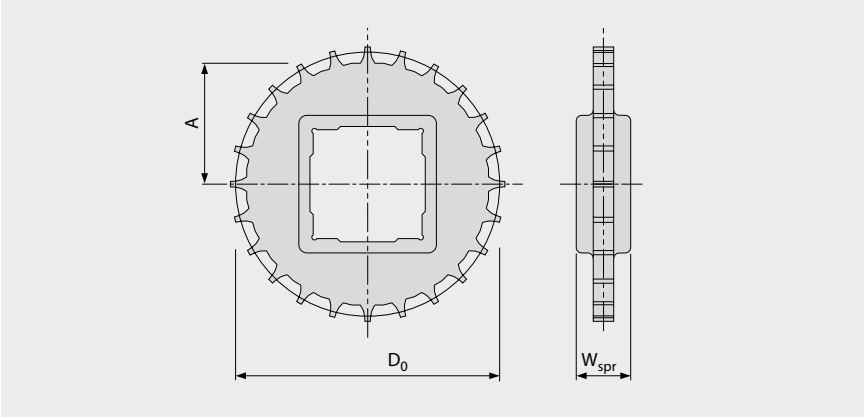

Main dimensions

Sprocket size (Number of teeth)		Z12	Z15	Z19	Z24	Z28	Z36
W_{spr}	mm	20.0	20.0	20.0	20.0	20.0	20.0
	inch	0.79	0.79	0.79	0.79	0.79	0.79
D_0	mm	50.0	62.3	78.7	99.2	115.7	148.7
	inch	1.97	2.45	3.10	3.91	4.56	5.85
A_{max}	mm	21.3	27.4	35.6	45.9	54.1	70.6
	inch	0.84	1.08	1.40	1.81	2.13	2.78
A_{min}	mm	20.5	26.8	35.1	45.5	53.7	70.3
	inch	0.81	1.06	1.38	1.79	2.11	2.77

Shaft bores (● = Round, ■ = Square; ❍ or ❑ = mold to order)

20	mm	●					
25	mm		● / ■		● / ❑	●	
30	mm				●		
40	mm			■	■	■	■
60	mm						■
0.75	inch	●					
1	inch		● / ■		●	●	
1.25	inch				●		
1.5	inch			■	■	■	■
2.5	inch						■

Material: PA, Color: LG

LG (Light gray)

All measurements and tolerances apply at 21 °C.
All imperial dimensions (inches) are rounded off.
For detailed sprocket and shaft dimensions see appendix 6.3
Number of sprockets (sprocket spacing distance) see chapter 3.2

S14-0 FLT/NCL PMC

No cling surface to improve release of wet and sticky products and Flat top surface for dry products

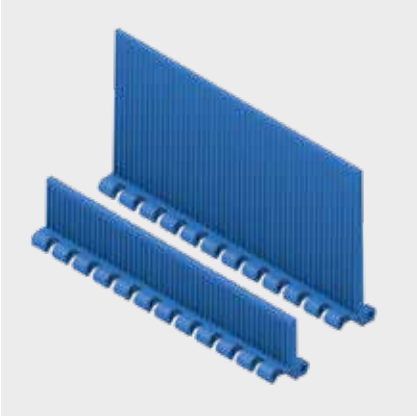

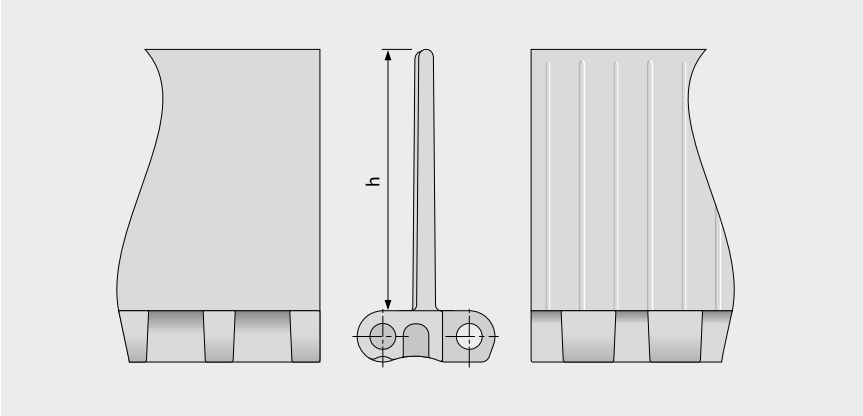

Basic data

Material	Color	Height (h)	
		25 mm 1 inch	76 mm 3 inch
PE	BL	●	mold to order
PE	WT	●	mold to order
POM	BL	●	●
POM	WT	mold to order	mold to order
PP	BL	●	●
PP	WT	●	mold to order

Molded width: 152 mm (6.0 in)

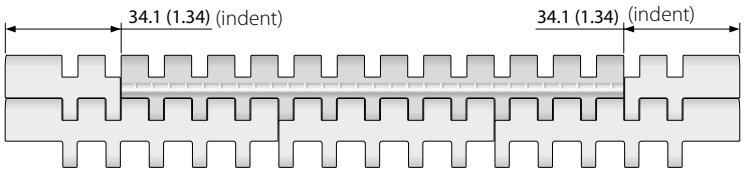

Standard configuration S14-0 PMC

BL (Blue), WT (White)

All measurements and tolerances apply at 21 °C; for temperature deviations please see Prolink manual chapter 4.4 "Temperature influence".
All imperial dimensions (inches) are rounded off.
Note: Use of accessory in a belt may impact on the minimum design radii. Please see chapter 6.3 for further information.

S14-25 PRR | Pin Retained Rollers

For applications where low back pressure accumulation or product separation is required

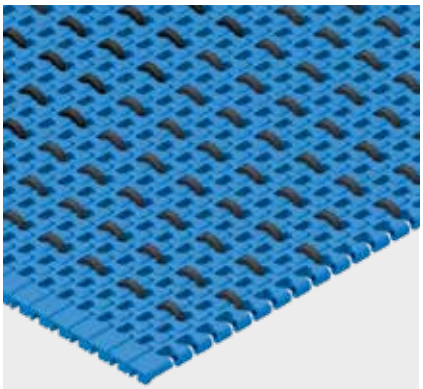

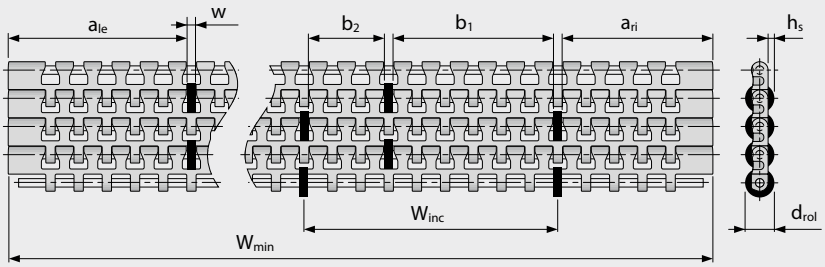

- For low back pressure wearstrips are to be positioned between the rollers
- For product separation the wear-strips are to be positioned below the rollers
- For all materials and surfaces
- Rollers available in POM BK

Dimensions

w	3.9 mm (0.15 in)	Roller cut out width
h_s	2.25 mm (0.09 in)	Height of rollers above surface
d_{rol}	13.2 mm (0.52 in)	Roller diameter
a	see config.	Indent of roller
b	see config.	Roller distance
s	n x s_{min}	Roller spacing in travel direction (standard: n = 1)
s_{min}	12.7 mm (0.5 in)	Min. roller spacing in travel direction
W_{inc}	see config.	Width increment
W_{min}	see config.	Min. belt width
W_B		Belt width
n_{rol}		Number of rollers across belt width

Allowable belt pull

To determine admissible belt pull calculate effective belt width $W_{B,ef}$ by

$W_{B,ef} = W_B - (w \times n_{rol})$

Example: W_B = 432 mm (17.0 in); w = 3.9 mm (0.15 in); n_{rol} = 7

$W_{B,ef}$ = 432 – (3.9 x 7) = 404.7 mm

$W_{B,ef}$ = 17 – (0.15 x 7) = 16 in

Note: Sprocket must not be placed inline with rollers. Deviation in roller spacing possible, please get in contact to customer service. Coefficient of friction between belt and conveyed product in accumulation mode μ_{acc} = 0.04, I.e. the accumulation pressure is approx. 4 % of the weight of the backed up product.

All measurements and tolerances apply at 21 °C; for temperature deviations please see Prolink manual chapter 4.4 “Temperature influence“.
All imperial dimensions (inches) are rounded off.
Note: Use of accessory in a belt may impact on the minimum design radii. Please see chapter 6.3 for further information.

S14-25 PRR | Pin Retained Rollers

Standard configurations and main data

	Min. belt width – W_{min}		Width increment – W_{inc}		Roller distance – b		Indent of roller – a left		Indent of roller – a right		Roller/m² (e.g. 18 in belt width)
	[mm]	[in]	[mm]	[in]	[mm]	[in]	[mm]	[in]	[mm]	[in]	
Config. 1	228.6	9	114.3	4.5	76.2/38.1	3/1.5	67.9	2.67	80.6	3.17	600
Config. 2	127	5	50.8	2	25.4	1	42	1.65	55	2.17	1400
Config. 3	127	5	76.2	3	38.1	1.5	42	1.65	42	1.65	990

Configuration 1

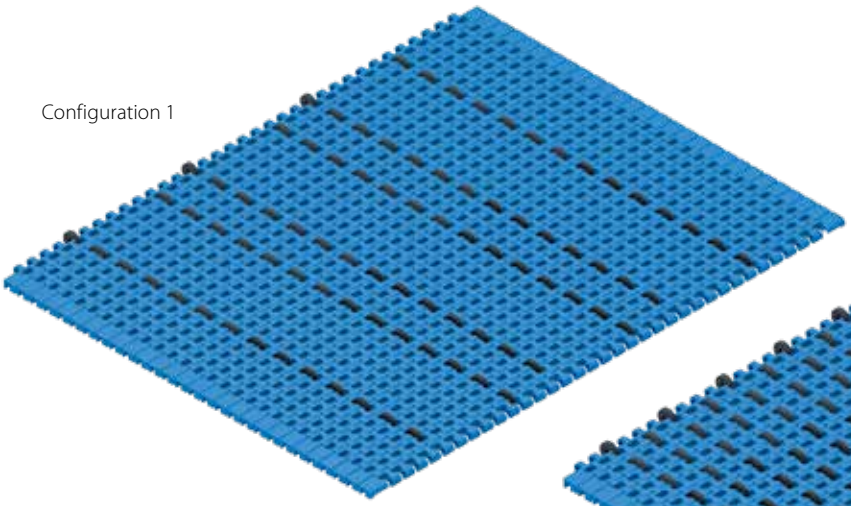

Configuration 2

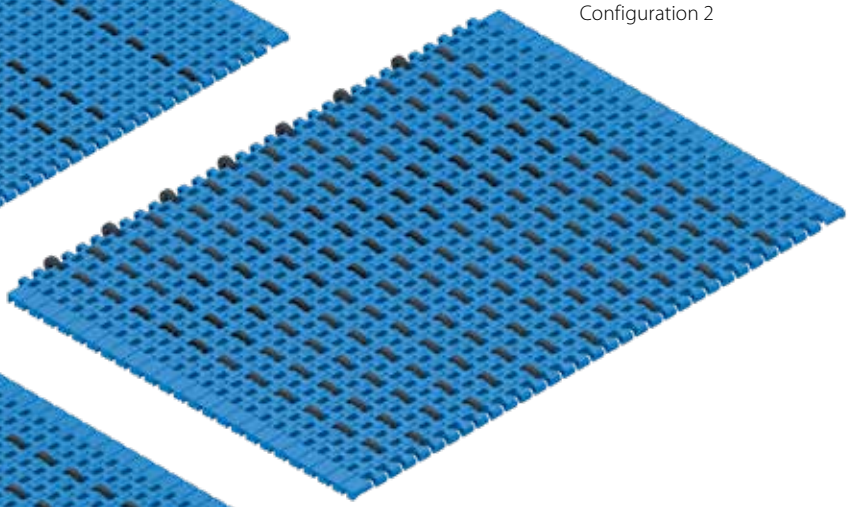

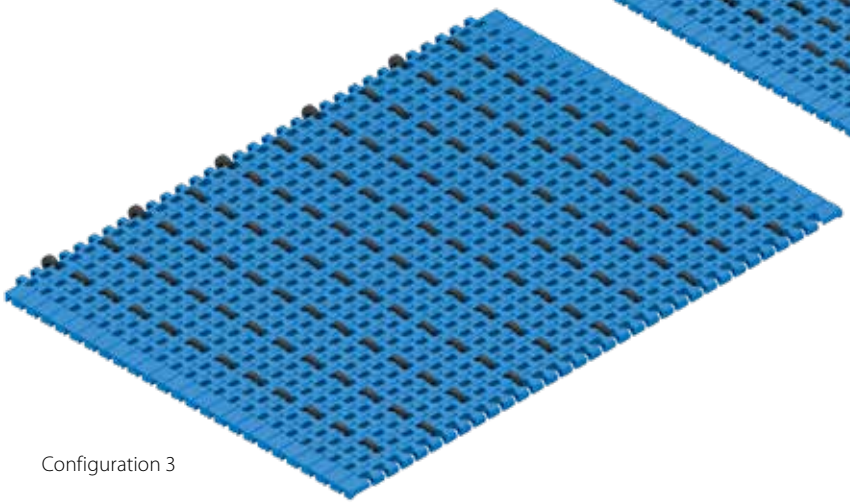

Configuration 3

siegling prolink
modular belts

SERIES 15

Straight running belts
Pitch 12.7 mm (0.50 in)

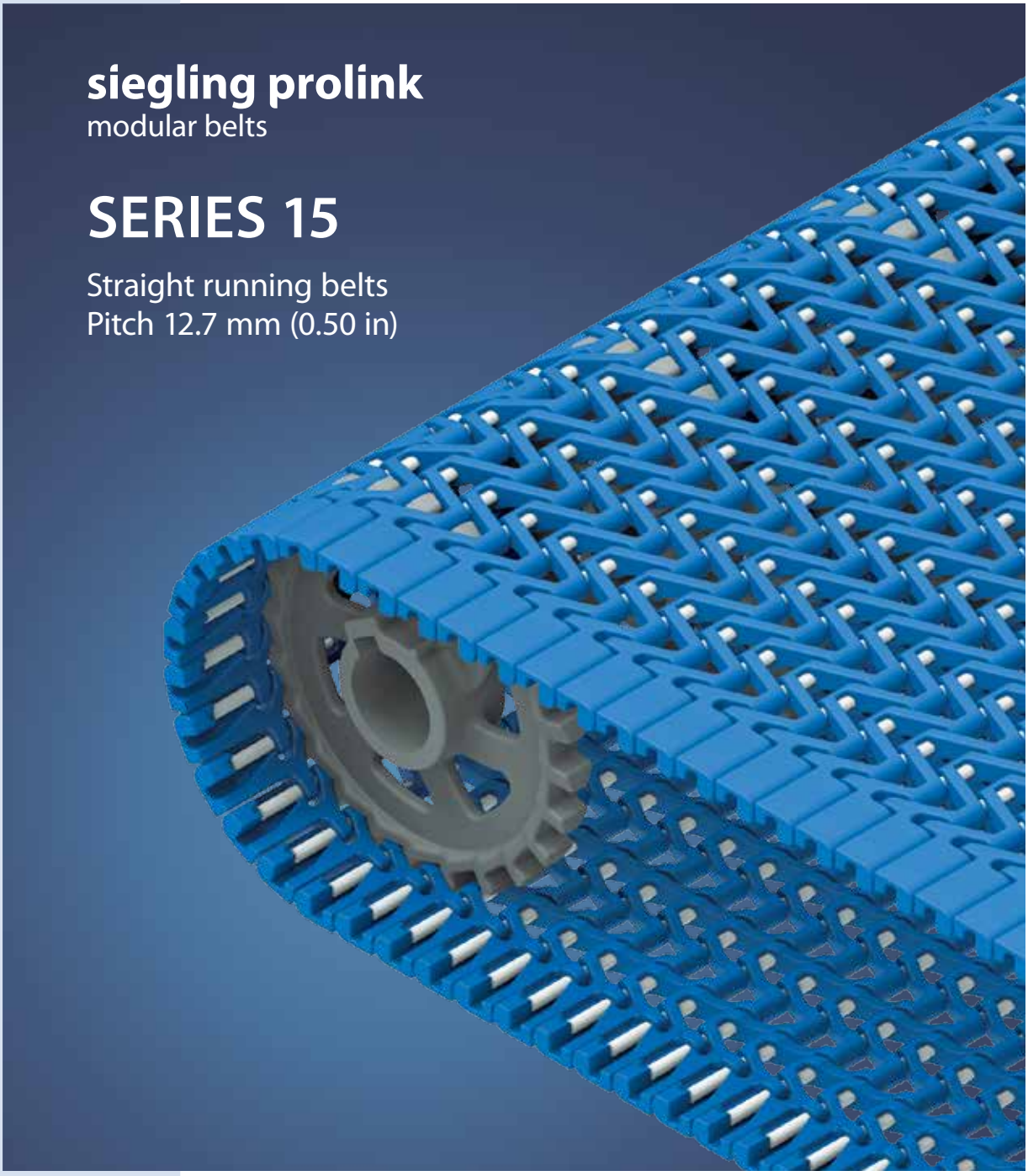

Belts for light-duty food applications utilizing 12.7 mm (0.5 in) nose bars

Side view scale 1:1

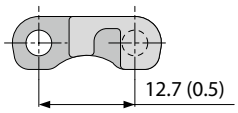

Available surface pattern and opening area

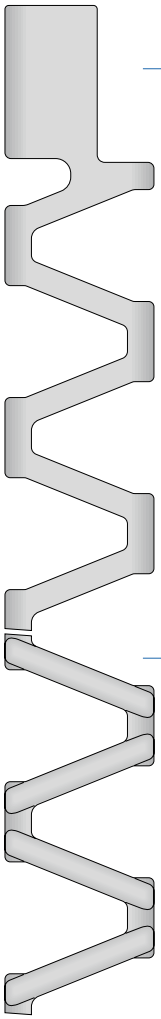

S15-47 GRT
Open (47 %), lattice-shaped surface

S15-47 RSA
Open (47 %), lattice-shaped surface with reduced surface area

Design characteristics

- Mini-pitch belt with large open area for optimum airflow
- Scalloped underside facilitates smooth product transfer over a 12.7 mm (0.5 in) diameter nose bar.
- Open hinge for improved sanitation
- Narrow 25 mm (1 in) width increments offer superior support of conveyed products
- Solid and robust edge design incorporating improved pin retention
- Headless one-piece pin for easy installation and removal
- Sprockets with large solid tooth insures superior load transmission and long wear life

Basic data

Pitch	12.7 mm (0.50 in)
Belt width min.	203.2 mm (8 in)
Width increments	25.4 mm (1 in)
Hinge pins	3.4 mm (0.13 in) made of plastic (PBT, PP). One-piece up to a belt width of 4000 mm (157.5 in).

Sprockets
in different sizes with round or square bore



NSF Certified

NSF-compliant from these certified Forbo plants: Huntersville (USA), Malacky (Slovakia), Tlalnepantla (Mexico)

S15-47 GRT | 47 % Opening | Grid top

Open area (47 %) for excellent air circulation and drainage | 31 % contact area (Largest opening: Ø = 8.5 mm/0.33 in) | Smooth surface | Easy-to-clean

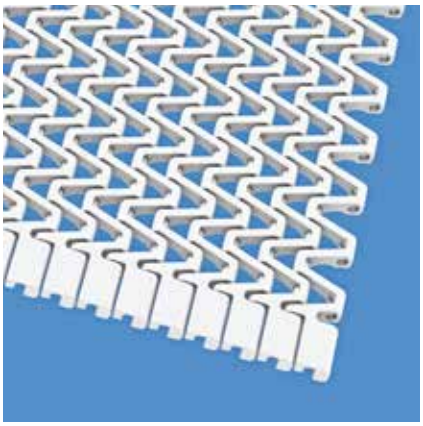

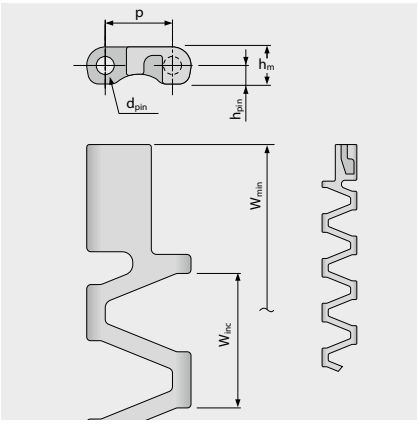

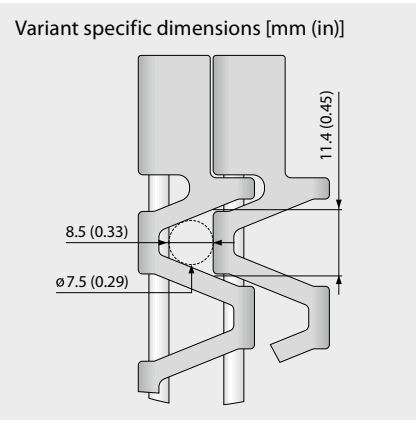

Belt dimensions

	p	d_{pin}	h_m	h_{pin}	h_s	W_{min}	W_{inc}	W_{tol}	Minimum flex radii[1]				
	Pitch	Pin Ø	Thickness	Pin position	Height	Width min.	Width Increment	Width tolerance [%]	r1 C_c x W_B	r2	r3	r4	r5
mm	12.7	3.4	7.0	3.5	–	203.2	25.4	±0.20	–	6.4	25.4	38.1	12.7
inch	0.5	0.13	0.28	0.14	–	8.0	1.0	±0.20	–	0.25	1.0	1.5	0.5

Available standard materials [3]

Belt		Pin		Nominal belt pull, straight		Weight		Width deviation	Temperature		Certificates[2]		
Material	Color	Material	Color	[N/mm]	[lb/ft]	[kg/m²]	[lb/ft²]	[%]	[°C]	[°F]	FDA	EU	MHLW
PA*	BL	PBT	UC	4.5	308	3.7	0.75	0.4	-40/120	-40/248	●	●	●
POM	BL	PBT	UC	5	343	4.3	0.88	-0.4	-45/90	-49/194	●	●	●
POM	WT	PBT	UC	5	343	4.3	0.88	-0.4	-45/90	-49/194	●	●	●
PP	BL	PP	WT	2.5	171	2.8	0.58	-1.0	5/100	41/212	●	●	●
PP	WT	PP	WT	2.5	171	2.8	0.58	-1.0	5/100	41/212	●	●	●
Mold to order belts													
PP	BL	PBT	UC	2.8	192	2.8	0.58	-1.0	5/100	41/212	●	●	●
PP	WT	PBT	UC	2.8	192	2.8	0.58	-1.0	5/100	41/212	●	●	●

* Values valid for dry applications (RH < 50 %). Belts in PA material will absorb water in wet environments, causing them to expand and reduce the nominal belt pull capacity.

BL (Blue), UC (Uncolored), WT (White)

All measurements and tolerances apply at 21 °C; for temperature deviations please see Prolink manual chapter 4.4 "Temperature influence".
All imperial dimensions (inches) are rounded off.
[1] Flex radii: r1 = side flex, r2 = front flex on roller, r3 = back flex on load bearing roller, r4 = back flex on Hold Down shoe, r5 = back flex on roller
[2] Complies with FDA 21 CFR | Complies with (EU) 10/2011 and (EC) 1935/2004 regulations regarding the raw materials used and the migration thresholds | Complies with Japanese MHLW Notification 370
● = available | – = not available | empty cells = not tested
[3] More materials and colors on request

S15-47 RSA | 47 % Opening | Reduced surface area

Open area (47 %) for excellent air circulation and drainage | 20 % contact area (Largest opening: Ø = 8.5 mm/0.33 in) | Smooth surface | Easy-to-clean

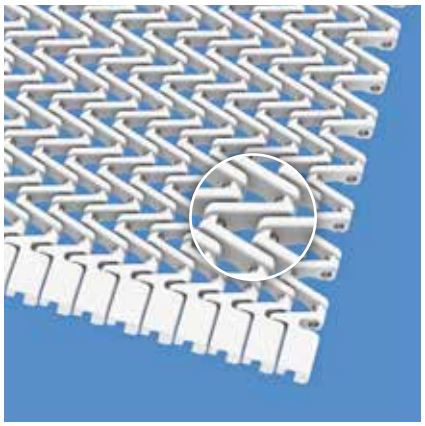

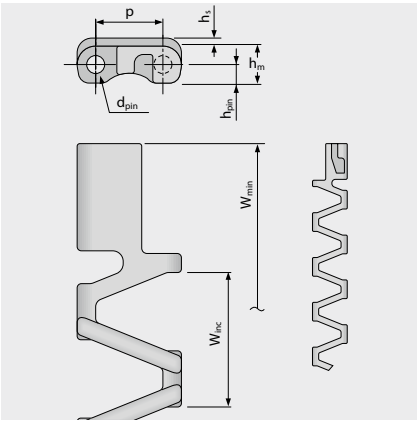

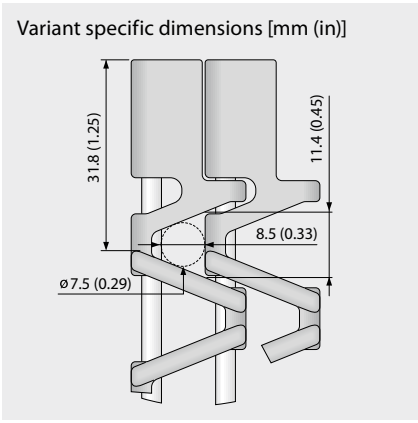

Belt dimensions

	p	d_{pin}	h_m	h_{pin}	h_s	W_{min}	W_{inc}	W_{tol}	Minimum flex radii[1]				
	Pitch	Pin Ø	Thickness	Pin position	Height	Width min.	Width Increment	Width tolerance [%]	r1 C_c x W_B	r2	r3	r4	r5
mm	12.7	3.4	7.0	3.5	1.5	203.2	25.4	±0.20	–	6.4	25.4	38.1	12.7
inch	0.5	0.13	0.28	0.14	0.06	8.0	1.0	±0.20	–	0.25	1.0	1.5	0.5

Available standard materials [3]

Belt		Pin		Nominal belt pull, straight		Weight		Width deviation	Temperature		Certificates[2]		
Material	Color	Material	Color	[N/mm]	[lb/ft]	[kg/m²]	[lb/ft²]	[%]	[°C]	[°F]	FDA	EU	MHLW
POM	BL	PBT	UC	5	343	5.2	1.07	-0.4	-45/90	-49/194	●	●	●
POM	WT	PBT	UC	5	343	5.2	1.07	-0.4	-45/90	-49/194	●	●	●
PP	BL	PP	WT	2.5	171	3.4	0.7	-1.0	5/100	41/212	●	●	●
Mold to order belts													
PA*	BL	PBT	UC	4.5	308	4.5	0.91	0.4	-40/120	-40/248	●	●	●
PP	BL	PBT	UC	2.8	192	3.4	0.7	-1.0	5/100	41/212	●	●	●
PP	WT	PBT	UC	2.8	192	3.4	0.7	-1.0	5/100	41/212	●	●	●
PP	WT	PP	WT	2.5	171	3.4	0.7	-1.0	5/100	41/212	●	●	●

* Values valid for dry applications (RH < 50 %). Belts in PA material will absorb water in wet environments, causing them to expand and reduce the nominal belt pull capacity.

BL (Blue), UC (Uncolored), WT (White)

All measurements and tolerances apply at 21 °C; for temperature deviations please see Prolink manual chapter 4.4 "Temperature influence".
All imperial dimensions (inches) are rounded off.

[1] Flex radii: r1 = side flex, r2 = front flex on roller, r3 = back flex on load bearing roller, r4 = back flex on Hold Down shoe, r5 = back flex on roller

[2] Complies with FDA 21 CFR | Complies with (EU) 10/2011 and (EC) 1935/2004 regulations regarding the raw materials used and the migration thresholds | Complies with Japanese MHLW Notification 370

● = available | – = not available | empty cells = not tested

[3] More materials and colors on request

S15 SPR | Sprockets



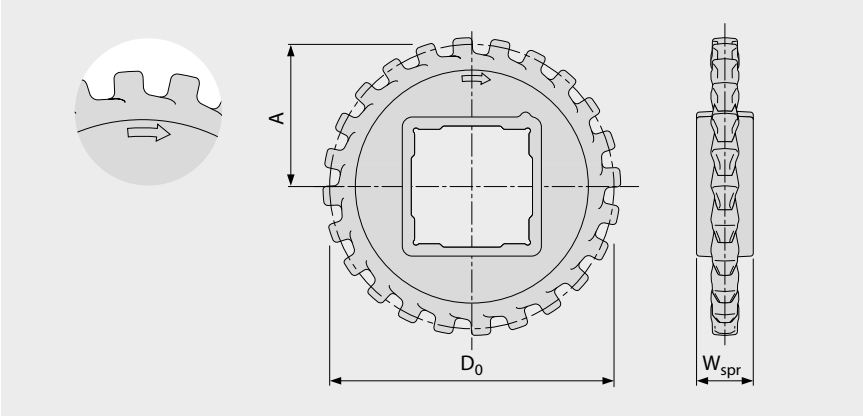

Main dimensions

Sprocket size (Number of teeth)		Z12	Z14	Z17	Z19	Z24	Z36
W_{spr}	mm	20.0	20.0	20.0	20.0	20.0	20.0
	inch	0.79	0.79	0.79	0.79	0.79	0.79
D_0	mm	50.6	58.9	71.3	79.6	100.4	150.3
	inch	1.99	2.32	2.81	3.13	3.95	5.92
A_{max}	mm	21.8	25.9	32.1	36.3	46.7	71.6
	inch	0.86	1.02	1.26	1.43	1.84	2.82
A_{min}	mm	21.0	25.3	31.6	35.8	46.3	71.4
	inch	0.83	1.00	1.24	1.41	1.82	2.81

Shaft bores (● = Round, ■ = Square)

20	mm		●	●			
25	mm	● / ■	●	●	● / ■	●	●
30	mm		●	●			
40	mm					■	■
0.75	inch		●	●			
1	inch	● / ■	● / ■	● / ■	● / ■	●	●
1.25	inch		●	●			
1.5	inch					■	■

Material: PA, Color: LG

LG (Light gray)

All measurements and tolerances apply at 21 °C.
All imperial dimensions (inches) are rounded off.
For detailed sprocket and shaft dimensions see appendix 6.3
Number of sprockets (sprocket spacing distance) see chapter 3.2

siegling prolink
modular belts

SERIES 17

Straight running belts
Pitch 25.4 mm (1 in)

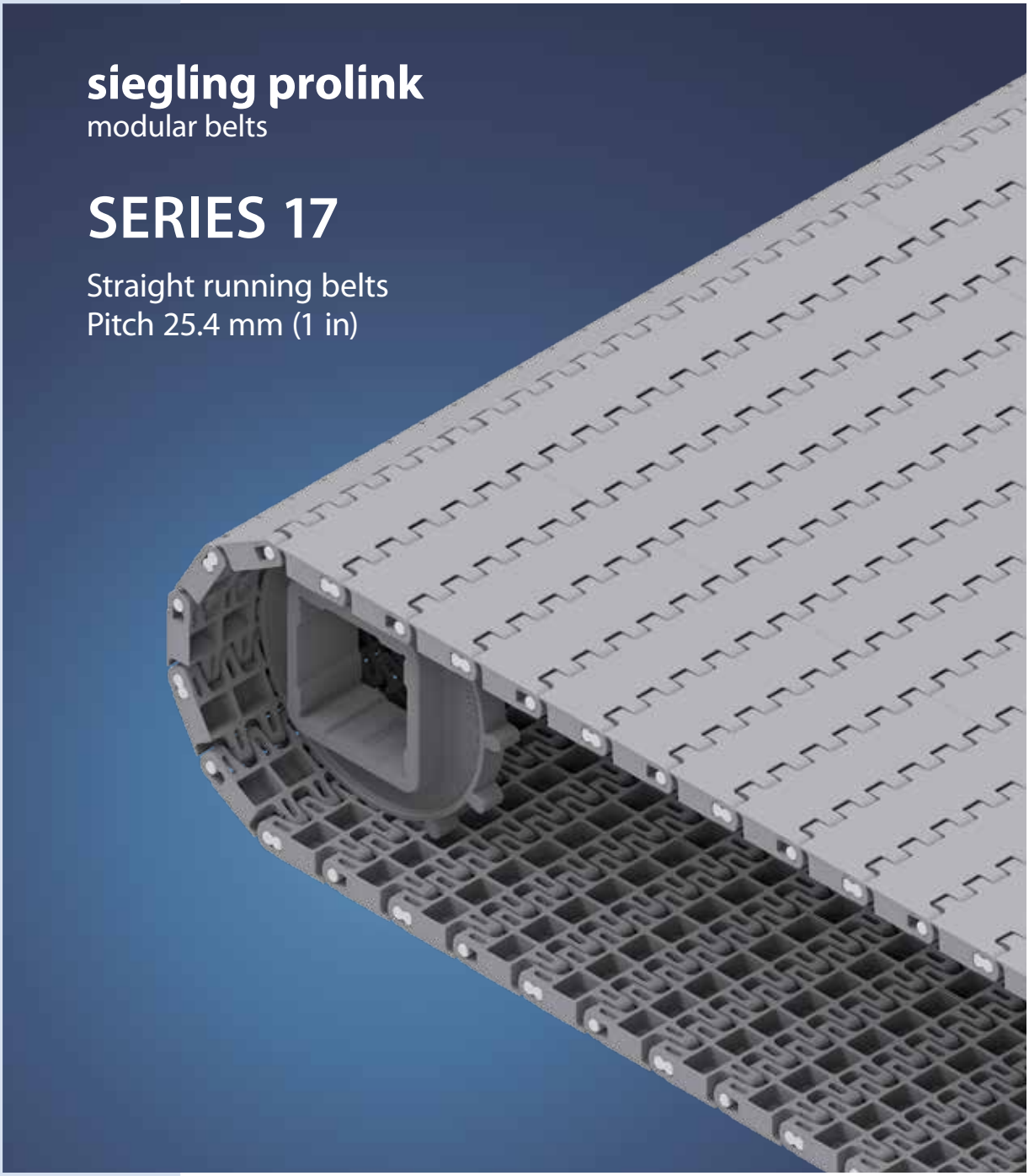

SERIES 17 | **OVERVIEW**

Straight running belts | Pitch 25.4 mm (1 in)

Medium to heavy-duty belts for industrial applications

Side view scale 1:1

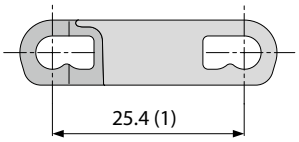

Available surface pattern and opening area

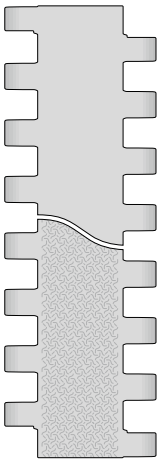

S17-0 FLT
Closed, smooth surface

S17-0 SRS
Closed, slip-resistant surface

Design characteristics

- Closed hinge design provides high belt pull capacity
- A rigid module design allows optimal utilization of belt pull capacity relative to belt weight
- Robust design guarantees durability
- Unique 'keyhole' pin retention system ensures easy pin removal
- Flame retardant version available (PXX-HC – in line with DIN EN 13501-1)

Basic data

Pitch	25.4 mm (1 in)
Belt width min.	76.2 mm (3 in)
Width increments	12.7 mm (0.5 in)
Hinge pins	4.2 mm (0.17 in) made of plastic (PBT, PP)

Sprockets
in different sizes with round or square bore

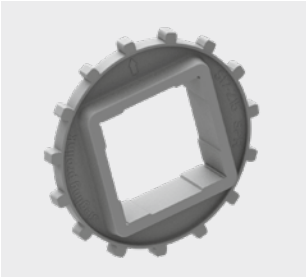

Profiles
for incline conveyors



S17-0 FLT | 0 % Opening | Flat top

Closed, smooth surface | Flat top surface

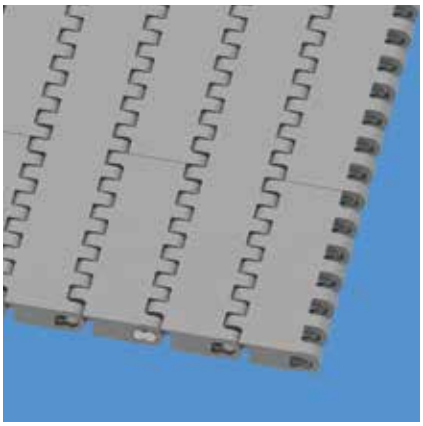

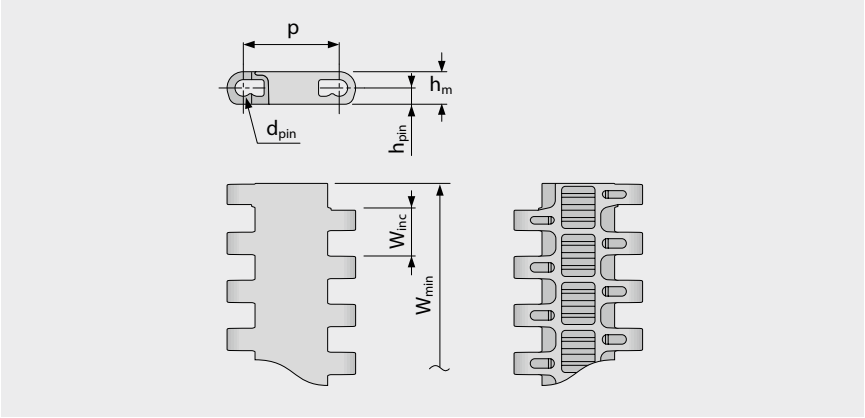

Belt dimensions

	p	d_{pin}	h_m	h_{pin}	h_s	W_{min}	W_{inc}	W_{tol}	Minimum flex radii[1]			
	Pitch	Pin Ø	Thickness	Pin position	Height	Width min.	Width Increment	Width tolerance [%]	r1 C_c x W_B	r2	r3	r4	r5
mm	25.4	4.2	8.6	4.3	0.0	76.2	12.7	±0.2	–	25.4	50.8	76.2	25.4
inch	1.0	0.17	0.34	0.17	0.0	3.0	0.5	±0.2	–	1.0	2.0	3.0	1.0

Available standard materials [3]

Belt		Pin		Nominal belt pull, straight		Weight		Width deviation	Temperature		Certificates[2]		
Material	Color	Material	Color	[N/mm]	[lb/ft]	[kg/m²]	[lb/ft²]	[%]	[°C]	[°F]	FDA	EU	MHLW
POM	LG	PBT	UC	32	2193	6.5	1.33	-0.09	-45/90	-49/194	●	●	●
POM	BL	PBT	UC	32	2193	6.5	1.33	-0.09	-45/90	-49/194	●	●	●
PP	BL	PP	BL	18	1233	4.2	0.86	0.35	5/100	41/212	●	●	●

Mold to width available in: 76 mm (3.0 in), 229 mm (9.0 in)

BL (Blue), LG (Light gray), UC (Uncolored)

All measurements and tolerances apply at 21 °C; for temperature deviations please see Prolink manual chapter 4.4 "Temperature influence".
All imperial dimensions (inches) are rounded off.

[1] Flex radii: r1 = side flex, r2 = front flex on roller, r3 = back flex on load bearing roller, r4 = back flex on Hold Down shoe, r5 = back flex on roller

[2] Complies with FDA 21 CFR | Complies with (EU) 10/2011 and (EC) 1935/2004 regulations regarding the raw materials used and the migration thresholds | Complies with Japanese MHLW Notification 370

● = available | – = not available | empty cells = not tested

[3] More materials and colors on request

S17-0 SRS | 0 % Opening | Slip-resistant surface

Closed surface | Slip-resistant surface, pleasant to walk and kneel on

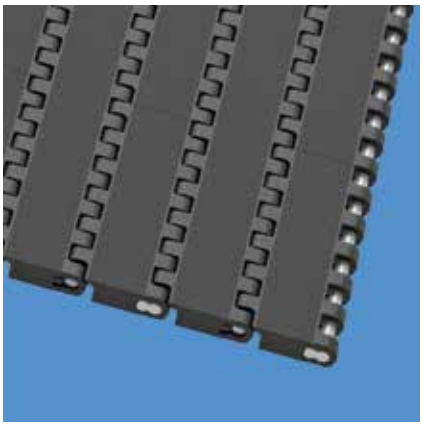

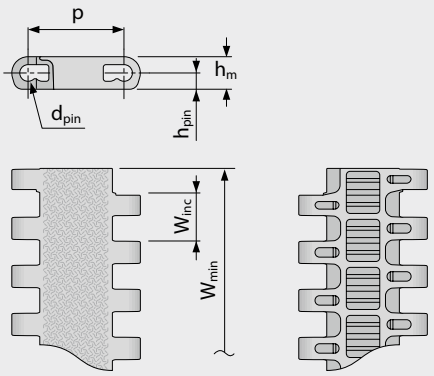

Belt dimensions

	p	d_{pin}	h_m	h_{pin}	h_s	W_{min}	W_{inc}	W_{tol}	Minimum flex radii[1]				
	Pitch	Pin Ø	Thickness	Pin position	Height	Width min.	Width Increment	Width tolerance [%]	r1 C_c x W_B	r2	r3	r4	r5
mm	25.4	4.2	8.6	4.3	0.0	76.2	12.7	±0.2	–	25.4	50.8	76.2	25.4
inch	1.0	0.17	0.34	0.17	0.0	3.0	0.5	±0.2	–	1.0	2.0	3.0	1.0

Mold to order belts [3]

Belt		Pin		Nominal belt pull, straight		Weight		Width deviation	Temperature		Certificates[2]
Material	Color	Material	Color	[N/mm]	[lb/ft]	[kg/m²]	[lb/ft²]	[%]	[°C]	[°F]	Flame retardant
PXX-HC	BK	PBT	UC	14	822	5.7	1.17	0.35	5/100	41/212	●

Mold to width available in: 76 mm (3.0 in), 229 mm (9.0 in)

■ BK (Black), □ UC (Uncolored)

All measurements and tolerances apply at 21 °C; for temperature deviations please see Prolink manual chapter 4.4 "Temperature influence".
All imperial dimensions (inches) are rounded off.

[1] Flex radii: r1 = side flex, r2 = front flex on roller, r3 = back flex on load bearing roller, r4 = back flex on Hold Down shoe, r5 = back flex on roller

[2] Complies with DIN EN 13501-1 Cfl-s1 (and DIN 4102 B1)

● = available | – = not available | empty cells = not tested

[3] More materials and colors on request

S17 SPR | Sprockets

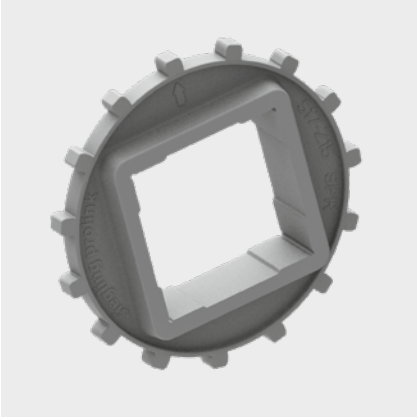

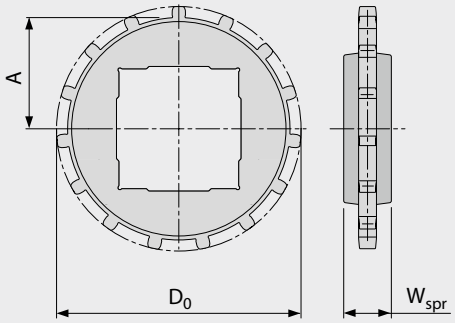

Main dimensions

Sprocket size (Number of teeth)		Z12	Z15	Z18	Z19
W_{spr}	mm	24.0	24.0	24.0	24.0
	inch	0.94	0.94	0.94	0.94
D_0	mm	99.7	123.2	148.0	156.1
	inch	3.93	4.85	5.83	6.15
A_{max}	mm	45.8	57.4	70.0	73.9
	inch	1.80	2.26	2.76	2.91
A_{min}	mm	44.0	56.0	68.7	72.7
	inch	1.73	2.20	2.70	2.86

Shaft bores (● = Round, ■ = Square)

30	mm	●			
40	mm	■		● / ■	
60	mm		■	■	■
80	mm				■
1.25	inch	●			
1.5	inch	■		● / ■	
2.5	inch		■	■	■

Material: PA, Color: LG

LG (Light gray)

All measurements and tolerances apply at 21 °C.
All imperial dimensions (inches) are rounded off.
For detailed sprocket and shaft dimensions see appendix 6.3
Number of sprockets (sprocket spacing distance) see chapter 3.2

S17-0 FLT PMU I83

Lateral rib with indent 83 mm (3.3 in) to carry goods with small profiles



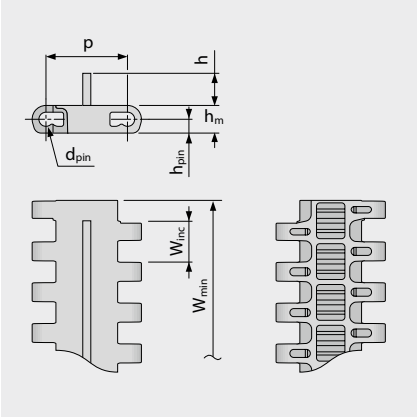

Variant specific dimensions [mm (in)]

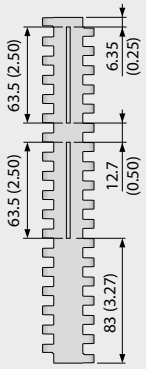

Basic data

Material	Color	Height (h)
		10 mm 0.39 inch
POM	LG	●

Molded width: 228.6 mm (9.0 in)

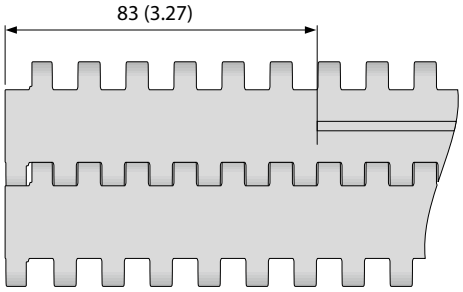

Standard configuration S17-0 FLT PMU I83

LG (Light gray)

All measurements and tolerances apply at 21 °C; for temperature deviations please see Prolink manual chapter 4.4 "Temperature influence".
All imperial dimensions (inches) are rounded off.
Note: Use of accessory in a belt may impact on the minimum design radii. Please see chapter 6.3 for further information.

siegling prolink
modular belts

SERIES 18

Side flexing and spiral belts
Pitch 25.4 mm (1 in)



SERIES 18 | **OVERVIEW**

Side flexing and spiral belts | Pitch 25.4 mm (1 in)

Belts for light to medium-duty food and non-food applications

Side view scale 1:1

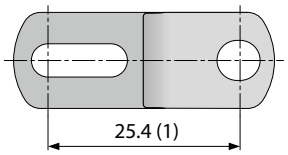

Design characteristics

- All plastic light weight belt suitable for both straight and radius conveying
- 44 % open area for excellent air circulation and drainage
- Narrow grid structure of the belt ensures secure handling of even small products
- High curve belt pull capacity offering improved capacity and reliability
- Easy to clean and suitable for conveying of food including direct food contact
- Superior lateral stiffness and rigidity for an all plastic belt

Basic data

Pitch	25.4 mm (1 in)
Belt width min.	149.9 mm (5.9 in)
Belt width max.	1219 mm (48 in)
Width increments	12.7 mm (0.5 in)
Hinge pins	4.2 mm (0.17 in) made of plastic (PLX, PP). One-piece up to a belt width of 1219 mm (48 in).

Available surface pattern and opening area

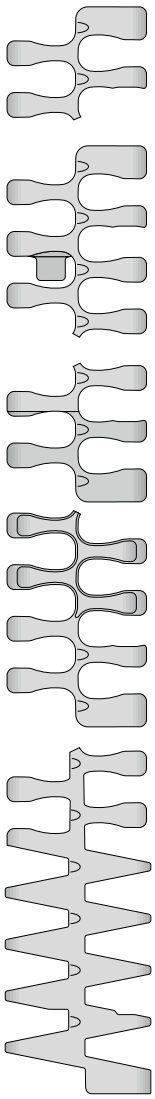

S18-44 GRT (CW/CCW) 2.2
Open (44 %), lattice-shaped surface

S18-44 GRT (CW/CCW) 2.2 G
Open (44 %), lattice-shaped surface and Hold Down Tabs

S18-44 HDK (CW/CCW) 2.2
Open (44 %), lattice-shaped surface and High Deck

S18-44 FRT1 (CW/CCW) 2.2
Open (44 %), surface with friction top

S18-44 GRT (CW/CCW) 1.7
Open (44 %), lattice-shaped surface

S18-44 GRT CW 2.2/1.7
S18-44 GRT CCW 1.7/2.2
Open (44 %), lattice-shaped surface
CW = Clockwise (right hand curve)
CCW = Counter Clockwise (left hand curve)
(picture shows CCW)

Sprockets
in different sizes with round or square bore



Profiles
for incline conveyors

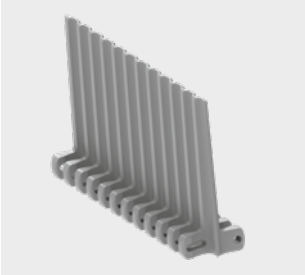

Side guard
as lane divider to separate products



S18-44 GRT (CW/CCW) 2.2 | 44 % Opening | Grid top

Open area (44%) for excellent air circulation and drainage | 42% contact area (Largest opening: Ø = 7.9 mm/0.31 in) | Lattice-shape surface | Collapse factor (C_c) = 2.2 | Running direction clockwise (cw) and counter clockwise (ccw)

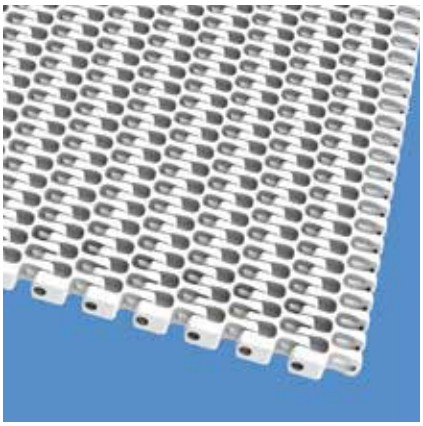

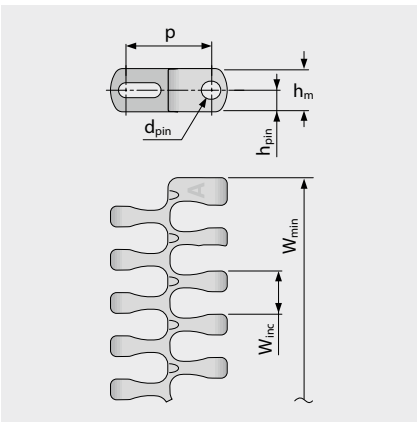

Variant specific dimensions [mm (in)]

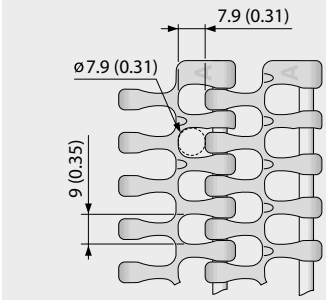

Belt dimensions

	p	d_{pin}	h_m	h_{pin}	h_s	W_{min}	W_{inc}	W_{tol}	Minimum flex radii[1]				
	Pitch	Pin Ø	Thickness	Pin position	Height	Width min.	Width Increment	Width tolerance [%]	r1 $C_c \times W_B$	r2	r3	r4	r5
mm	25.4	4.2	12.7	6.4	0.0	149.9	12.7	±0.2	2.2 x W_B	25.4	50.8	76.2	25.4
inch	1.0	0.17	0.5	0.25	0.0	5.9	0.5	±0.2	2.2 x W_B	1.0	2.0	3.0	1.0

W_B = Belt width, further information regarding r1 see page III-31

Available standard materials [3]

Belt		Pin		Nominal belt pull, straight		Nominal belt pull, curve		Weight		Width deviation	Temperature		Certificates[2]		
Material	Color	Material	Color	[N/mm]	[lb/ft]	[N]	[lb]	[kg/m²]	[lb/ft²]	[%]	[°C]	[°F]	FDA	EU	MHLW
POM-CR	BL	PLX	BL	30	2056	1600	360	8.4	1.72	-0.1	-45/90	-49/194	●	●	●
POM-CR	WT	PLX	BL	30	2056	1600	360	8.4	1.72	-0.1	-45/90	-49/194	●	●	●
PP	BL	PLX	BL	18	1233	1000	225	5.8	1.19	0.5	5/100	41/212	●	●	●
PP	WT	PLX	BL	18	1233	1000	225	5.8	1.19	0.5	5/100	41/212	●	●	●
PP	BL	PP	WT	16	1096	600	135	5.5	1.13	0.5	5/100	41/212	●	●	●
PP	WT	PP	WT	16	1096	600	135	5.5	1.13	0.5	5/100	41/212	●	●	●
Mold to order belts															
PA*	BL	PLX	BL	25	1713	1500	337	6.9	1.41	0.85	-40/120	-40/248	●	●	●

* Values valid for dry applications (RH < 50 %). Belts in PA material will absorb water in wet environments, causing them to expand and reduce the nominal belt pull capacity.

■ BL (Blue), □ WT (White)

All measurements and tolerances apply at 21 °C; for temperature deviations please see Prolink manual chapter 4.4 "Temperature influence".
All imperial dimensions (inches) are rounded off.

[1] Flex radii: r1 = side flex, r2 = front flex on roller, r3 = back flex on load bearing roller, r4 = back flex on Hold Down shoe, r5 = back flex on roller

[2] Complies with FDA 21 CFR | Complies with (EU) 10/2011 and (EC) 1935/2004 regulations regarding the raw materials used and the migration thresholds | Complies with Japanese MHLW Notification 370
● = available | – = not available | empty cells = not tested

[3] More materials and colors on request

S18-44 GRT (CW/CCW) 2.2 G | 44 % Opening | Grid top · guided

Open area (44%) for excellent air circulation and drainage | 42% contact area (Largest opening: Ø = 7.9 mm/0.31 in) | Lattice-shape surface and Hold Down Tabs | Allows utilization of the entire belt width | Collapse factor (C_c) = 2.2 | Running direction clockwise (cw) and counter clockwise (ccw)

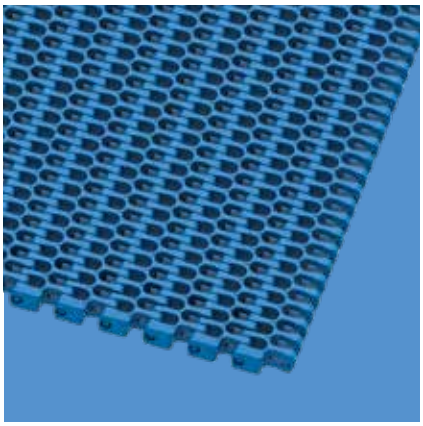

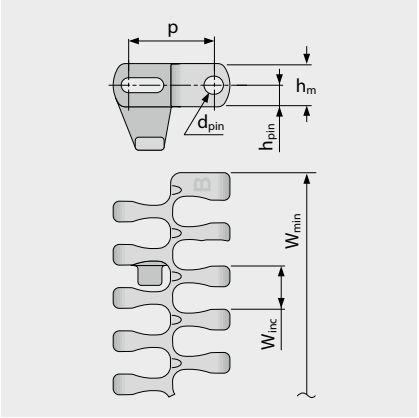

Variant specific dimensions [mm (in)]

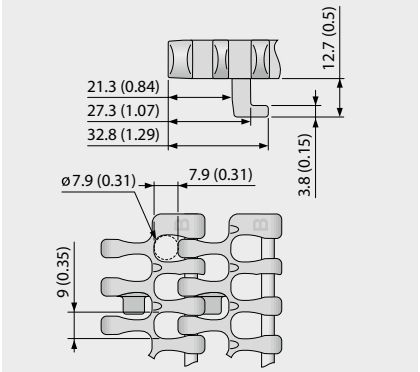

Belt dimensions

	p	d_{pin}	h_m	h_{pin}	h_s	W_{min}	W_{inc}	W_{tol}	Minimum flex radii[1]				
	Pitch	Pin Ø	Thickness	Pin position	Height	Width min.	Width Increment	Width tolerance [%]	r1 $C_c \times W_B$	r2	r3	r4	r5
mm	25.4	4.2	12.7	6.4	0.0	149.9	12.7	±0.2	2.2 x W_B	25.4	50.8	76.2	25.4
inch	1.0	0.17	0.5	0.25	0.0	5.9	0.5	±0.2	2.2 x W_B	1.0	2.0	3.0	1.0

W_B = Belt width, further information regarding r1 see page III-31

Available standard materials [3]

Belt		Pin		Nominal belt pull, straight		Nominal belt pull, curve**		Weight		Width deviation	Temperature		Certificates[2]		
Material	Color	Material	Color	[N/mm]	[lb/ft]	[N]	[lb]	[kg/m²]	[lb/ft²]	[%]	[°C]	[°F]	FDA	EU	MHLW
POM-CR	BL	PLX	BL	30	2056	1600	360	8.4	1.72	-0.1	-45/90	-49/194	●	●	●
POM-CR	WT	PLX	BL	30	2056	1600	360	8.4	1.72	-0.1	-45/90	-49/194	●	●	●
PP	BL	PLX	BL	18	1233	1000	225	5.8	1.19	0.5	5/100	41/212	●	●	●
PP	WT	PLX	BL	18	1233	1000	225	5.8	1.19	0.5	5/100	41/212	●	●	●
Mold to order belts															
PA*	BL	PLX	BL	25	1713	1500	337	6.9	1.41	0.85	-40/120	-40/248	●	●	●

* Values valid for dry applications (RH < 50 %). Belts in PA material will absorb water in wet environments, causing them to expand and reduce the nominal belt pull capacity.

** will be reduced by G-tab guiding (see chapter 3.3 conveyor layouts)

■ BL (Blue), □ WT (White)

All measurements and tolerances apply at 21 °C; for temperature deviations please see Prolink manual chapter 4.4 "Temperature influence".
All imperial dimensions (inches) are rounded off.

[1] Flex radii: r1 = side flex, r2 = front flex on roller, r3 = back flex on load bearing roller, r4 = back flex on Hold Down shoe, r5 = back flex on roller
Attention: Restrictions on sprocket size and corresponding shaft options – please check sprocket data sheet

[2] Complies with FDA 21 CFR | Complies with (EU) 10/2011 and (EC) 1935/2004 regulations regarding the raw materials used and the migration thresholds | Complies with Japanese MHLW Notification 370
● = available | – = not available | empty cells = not tested

[3] More materials and colors on request

S18-44 HDK (CW/CCW) 2.2 | 44 % Opening | High Deck

Open area (44 %) for excellent air circulation and drainage | 42 % contact area (Largest opening: Ø = 7.9 mm/0.31 in) | Lattice-shape surface | Collapse factor (C_c) = 2.2 | Allows utilization of the entire belt width and beyond | Running direction clockwise (cw) and counter clockwise (ccw)

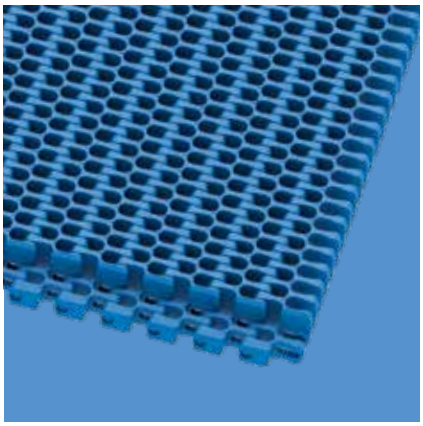

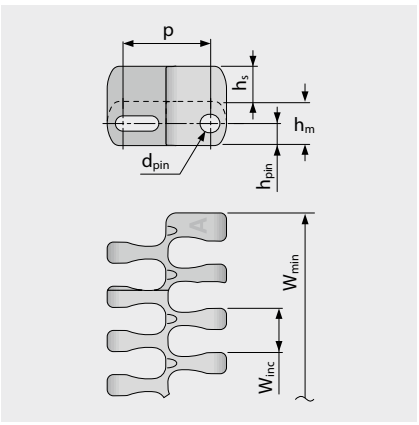

Variant specific dimensions [mm (in)]

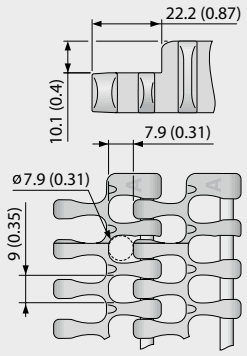

Belt dimensions

	p	d_{pin}	h_m	h_{pin}	h_s	W_{min}	W_{inc}	W_{tol}	Minimum flex radii[1]				
	Pitch	Pin Ø	Thickness	Pin position	Height	Width min.	Width Increment	Width tolerance [%]	r1 $C_c \times W_B$	r2	r3	r4	r5
mm	25.4	4.2	12.7	6.4	10.1	149.9	12.7	±0.2	2.2 x W_B	25.4	50.8	76.2	25.4
inch	1.0	0.17	0.5	0.25	0.4	5.90	0.5	±0.2	2.2 x W_B	1.0	2.0	3.0	1.0

W_B = Belt width, further information regarding r1 see page III-31

Available standard materials [3]

Belt		Pin		Nominal belt pull, straight		Nominal belt pull, curve		Weight		Width deviation	Temperature		Certificates[2]		
Material	Color	Material	Color	[N/mm]	[lb/ft]	[N]	[lb]	[kg/m²]	[lb/ft²]	[%]	[°C]	[°F]	FDA	EU	MHLW
PA*	BL	PLX	BL	25	1713	1500	337	12.6	2.58	0.85	-40/120	-40/248	●	●	●
POM-CR	BL	PLX	BL	30	2056	1600	360	15.5	3.17	-0.1	-45/90	-49/194	●	●	●
PP	BL	PLX	BL	18	1233	1000	225	10.3	2.11	0.5	5/100	41/212	●	●	●
PP	WT	PLX	BL	18	1233	1000	225	10.3	2.11	0.5	5/100	41/212	●	●	●
PP	BL	PP	WT	16	1096	800	180	10.2	2.09	0.5	5/100	41/212	●	●	●
PP	WT	PP	WT	16	1096	800	180	10.2	2.09	0.5	5/100	41/212	●	●	●
Mold to order belts															
POM-CR	WT	PLX	BL	30	2056	1600	360	15.5	3.17	-0.1	-45/90	-49/194	●	●	●

* Values valid for dry applications (RH < 50 %). Belts in PA material will absorb water in wet environments, causing them to expand and reduce the nominal belt pull capacity.

BL (Blue), WT (White)

All measurements and tolerances apply at 21 °C; for temperature deviations please see Prolink manual chapter 4.4 "Temperature influence".
All imperial dimensions (inches) are rounded off.

[1] Flex radii: r1 = side flex, r2 = front flex on roller, r3 = back flex on load bearing roller, r4 = back flex on Hold Down shoe, r5 = back flex on roller

[2] Complies with FDA 21 CFR | Complies with (EU) 10/2011 and (EC) 1935/2004 regulations regarding the raw materials used and the migration thresholds | Complies with Japanese MHLW Notification 370
● = available | – = not available | empty cells = not tested

[3] More materials and colors on request

S18-44 GRT (CW/CCW) 1.7 | 44 % Opening | Grid top

Open area (44 %) for excellent air circulation and drainage | 42 % contact area (Largest opening: Ø = 7.9 mm/0.31 in) | Lattice-shape surface | Collapse factor (C_C) = 1.7 | Running direction clockwise (cw) and counter clockwise (ccw)

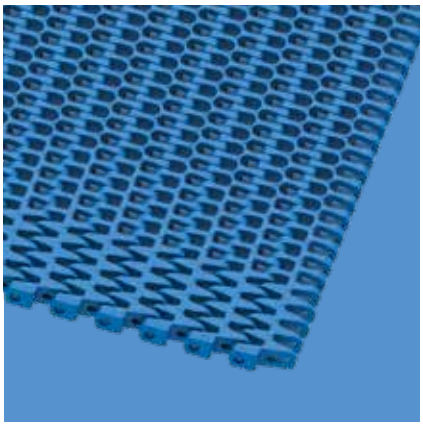

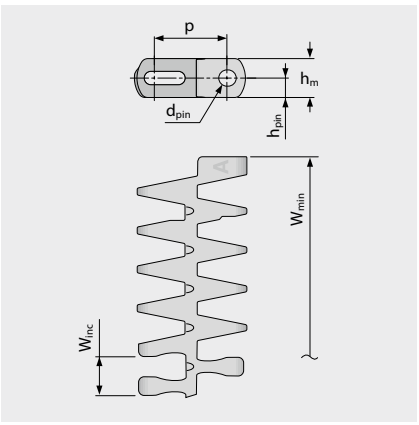

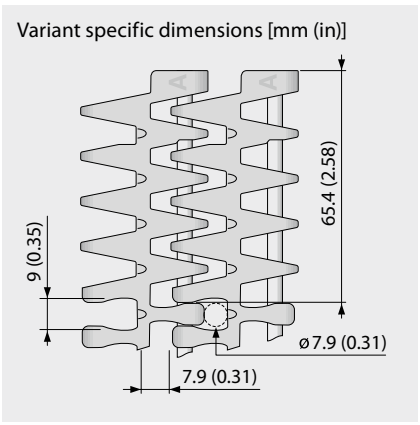

Belt dimensions

	p	d_{pin}	h_m	h_{pin}	h_s	W_{min}	W_{inc}	W_{tol}	Minimum flex radii[1]				
	Pitch	Pin Ø	Thickness	Pin position	Height	Width min.	Width Increment	Width tolerance [%]	r1 $C_c \times W_B$	r2	r3	r4	r5
mm	25.4	4.2	12.7	6.4	0.0	175.3	12.7	±0.2	1.7 x W_B	25.4	50.8	76.2	25.4
inch	1.0	0.17	0.5	0.25	0.0	6.9	0.5	±0.2	1.7 x W_B	1.0	2.0	3.0	1.0

W_B = Belt width, further information regarding r1 see page III-31

Available standard materials [3]

Belt		Pin		Nominal belt pull, straight		Nominal belt pull, belt width curve < 403 mm (15.88 in)		Nominal belt pull, belt width curve ≥ 403 mm (15.88 in)		Weight		Width deviation	Temperature		Certificates[2]		
Material	Color	Material	Color	[N/mm]	[lb/ft]	[N]	[lb]	[N]	[lb]	[kg/m²]	[lb/ft²]	[%]	[°C]	[°F]	FDA	EU	MHLW
POM-CR	BL	PLX	BL	25	1713	700	157	900	202	8.4	1.72	-0.1	-45/90	-49/194	●	●	●
POM-CR	WT	PLX	BL	25	1713	700	157	900	202	8.4	1.72	-0.1	-45/90	-49/194	●	●	●
PP	BL	PLX	BL	18	1233	400	90	700	157	5.8	1.19	0.5	5/100	41/212	●	●	●
PP	WT	PLX	BL	18	1233	400	90	700	157	5.8	1.19	0.5	5/100	41/212	●	●	●
PP	BL	PP	WT	16	1096	400	90	600	135	5.5	1.13	0.5	5/100	41/212	●	●	●
PP	WT	PP	WT	16	1096	400	90	600	135	5.5	1.13	0.5	5/100	41/212	●	●	●

BL (Blue), WT (White)

All measurements and tolerances apply at 21 °C; for temperature deviations please see Prolink manual chapter 4.4 "Temperature influence".
All imperial dimensions (inches) are rounded off.

[1] Flex radii: r1 = side flex, r2 = front flex on roller, r3 = back flex on load bearing roller, r4 = back flex on Hold Down shoe, r5 = back flex on roller

[2] Complies with FDA 21 CFR | Complies with (EU) 10/2011 and (EC) 1935/2004 regulations regarding the raw materials used and the migration thresholds | Complies with Japanese MHLW Notification 370

● = available | – = not available | empty cells = not tested

[3] More materials and colors on request

S18-44 FRT1 (CW/CCW) 2.2 | 44 % Opening | Friction top (Design 1)

Open area (44%) with integrated friction pads (FRT1) for high grip | 42% contact area (Largest opening: Ø = 7.9 mm/0.31 in) | Standard version without FRT-pads on belt edge (27.5 mm/1.08 in indent) | Collapse factor (C_c) = 2.2 | Running direction clockwise (cw) and counter clockwise (ccw)

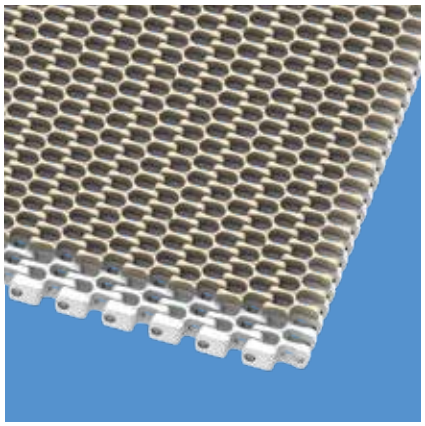

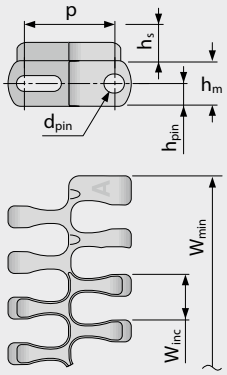

Variant specific dimensions [mm (in)]

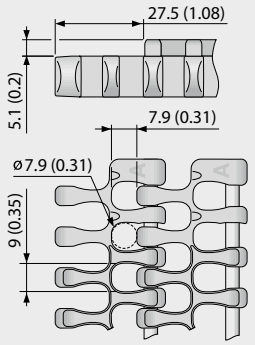

Belt dimensions

	p	d_{pin}	h_m	h_{pin}	h_s	W_{min}	W_{inc}	W_{tol}	Minimum flex radii[1]			
	Pitch	Pin Ø	Thickness	Pin position	Height	Width min.	Width Increment	Width tolerance [%]	r1 $C_c \times W_B$	r2	r3	r4	r5
mm	25.4	4.2	12.7	6.4	5.1	149.9	12.7	±0.2	2.2 x W_B	25.4	50.8	76.2	25.4
inch	1.0	0.17	0.5	0.25	0.20	5.90	0.5	±0.2	2.2 x W_B	1.0	2.0	3.0	1.0

W_B = Belt width, further information regarding r1 see page III-31

Available standard materials [3]

Belt		Pin		Rubber		Nominal belt pull, straight		Nominal belt pull, curve		Weight		Width deviation	Temperature		Certificates[2]		
Material	Color	Material	Color	Material	Color	[N/mm]	[lb/ft]	[N]	[lb]	[kg/m²]	[lb/ft²]	[%]	[°C]	[°F]	FDA	EU	MHLW
PP	BL	PLX	BL	R7	BL	18	1233	1000	225	8.80	1.80	0.5	5/100	41/212	●	●	
PP	WT	PLX	BL	R7	BG	18	1233	1000	225	8.80	1.80	0.5	5/100	41/212	●	●	
PP	BL	PP	WT	R7	BL	16	1096	600	135	8.60	1.76	0.5	5/100	41/212	●	●	
PP	WT	PP	WT	R7	BG	16	1096	600	135	8.60	1.76	0.5	5/100	41/212	●	●	

BG (Beige), BL (Blue), WT (White)

All measurements and tolerances apply at 21 °C; for temperature deviations please see Prolink manual chapter 4.4 "Temperature influence".
All imperial dimensions (inches) are rounded off.

[1] Flex radii: r1 = side flex, r2 = front flex on roller, r3 = back flex on load bearing roller, r4 = back flex on Hold Down shoe, r5 = back flex on roller

[2] Complies with FDA 21 CFR | Complies with (EU) 10/2011 and (EC) 1935/2004 regulations regarding the raw materials used and the migration thresholds | Complies with Japanese MHLW Notification 370
● = available | – = not available | empty cells = not tested

[3] More materials and colors on request

S18-44 GRT CW 2.2/1.7 | 44 % Opening | Grid top | Clockwise or right hand curve

Combination of high belt pull capacity and small radii in one directional curve layouts | Open area (44 %) for excellent air circulation and drainage | 42 % contact area (Largest opening: Ø = 7.9 mm/0.31 in) | Lattice-shape surface | Collapse factor (C_C) = 1.7 | Running direction clockwise (cw) and counter clockwise (ccw)

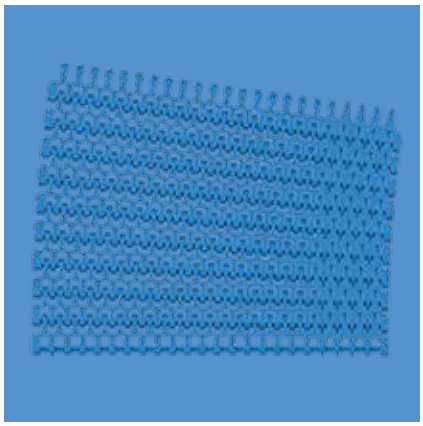

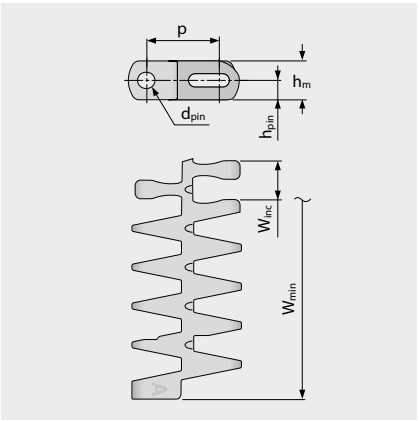

Variant specific dimensions [mm (in)]

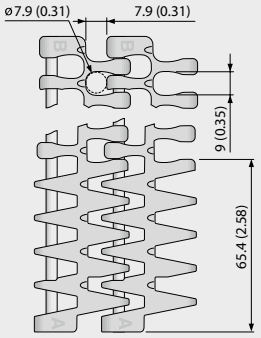

Belt dimensions

	p	d_{pin}	h_m	h_{pin}	h_s	W_{min}	W_{inc}	W_{tol}	Minimum flex radii[1]			
	Pitch	Pin Ø	Thickness	Pin position	Height	Width min.	Width Increment	Width tolerance [%]	r1 $C_c \times W_B$	r2	r3	r4	r5
mm	25.4	4.2	12.7	6.4	0.0	149.9	12.7	±0.2	1.7 x W_B	25.4	50.8	76.2	25.4
inch	1.0	0.17	0.5	0.25	0.0	5.90	0.5	±0.2	1.7 x W_B	1.0	2.0	3.0	1.0

W_B = Belt width, further information regarding r1 see page III-31

Available standard materials [3]

Belt		Pin		Nominal belt pull, straight		Nominal belt pull, curve		Weight		Width deviation	Temperature		Certificates[2]		
Material	Color	Material	Color	[N/mm]	[lb/ft]	[N]	[lb]	[kg/m²]	[lb/ft²]	[%]	[°C]	[°F]	FDA	EU	MHLW
POM-CR	BL	PLX	BL	30	2056	1600	360	8.4	1.72	-0.1	-45/90	-49/194	●	●	●
POM-CR	WT	PLX	BL	30	2056	1600	360	8.4	1.72	-0.1	-45/90	-49/194	●	●	●
PP	BL	PLX	BL	18	1233	1000	225	5.8	1.19	0.5	5/100	41/212	●	●	●
PP	WT	PLX	BL	18	1233	1000	225	5.8	1.19	0.5	5/100	41/212	●	●	●
PP	BL	PP	WT	16	1096	600	135	5.5	1.13	0.5	5/100	41/212	●	●	●
PP	WT	PP	WT	16	1096	600	135	5.5	1.13	0.5	5/100	41/212	●	●	●

BL (Blue), WT (White)

All measurements and tolerances apply at 21 °C; for temperature deviations please see Prolink manual chapter 4.4 "Temperature influence".
All imperial dimensions (inches) are rounded off.

[1] Flex radii: r1 = side flex, r2 = front flex on roller, r3 = back flex on load bearing roller, r4 = back flex on Hold Down shoe, r5 = back flex on roller

[2] Complies with FDA 21 CFR | Complies with (EU) 10/2011 and (EC) 1935/2004 regulations regarding the raw materials used and the migration thresholds | Complies with Japanese MHLW Notification 370
● = available | – = not available | empty cells = not tested

[3] More materials and colors on request

S18-44 GRT CCW 1.7/2.2 | 44 % Opening | Grid top | Counter clockwise or left hand curve

Combination of high belt pull capacity and small radii in one directional curve layouts | Open area (44 %) for excellent air circulation and drainage | 42 % contact area (Largest opening: Ø = 7.9 mm/0.31 in) | Lattice-shape surface | Collapse factor (C_C) = 1.7 | Running direction clockwise (cw) and counter clockwise (ccw)

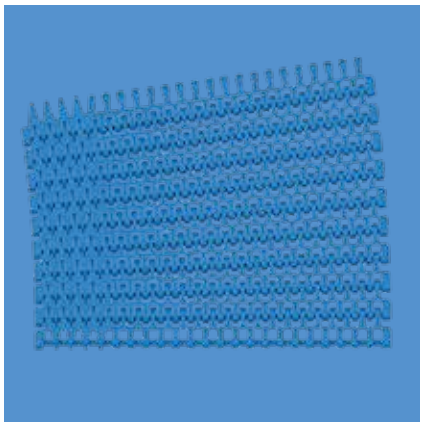

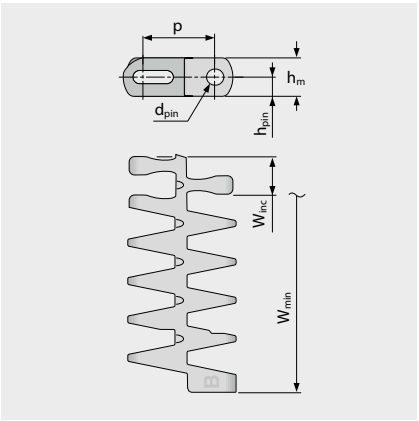

Variant specific dimensions [mm (in)]

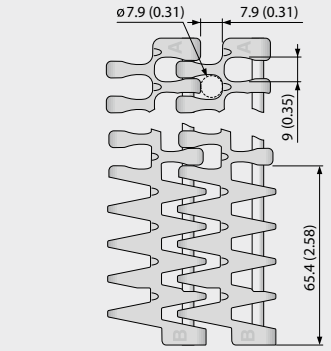

Belt dimensions

	p	d_{pin}	h_m	h_{pin}	h_s	W_{min}	W_{inc}	W_{tol}	Minimum flex radii[1]				
	Pitch	Pin Ø	Thickness	Pin position	Height	Width min.	Width Increment	Width tolerance [%]	r1 $C_c \times W_B$	r2	r3	r4	r5
mm	25.4	4.2	12.7	6.4	0.0	149.9	12.7	±0.2	1.7 x W_B	25.4	50.8	76.2	25.4
inch	1.0	0.17	0.5	0.25	0.0	5.90	0.5	±0.2	1.7 x W_B	1.0	2.0	3.0	1.0

W_B = Belt width, further information regarding r1 see page III-31

Available standard materials [3]

Belt		Pin		Nominal belt pull, straight		Nominal belt pull, curve		Weight		Width deviation	Temperature		Certificates[2]		
Material	Color	Material	Color	[N/mm]	[lb/ft]	[N]	[lb]	[kg/m²]	[lb/ft²]	[%]	[°C]	[°F]	FDA	EU	MHLW
POM-CR	BL	PLX	BL	30	2056	1600	360	8.4	1.72	-0.1	-45/90	-49/194	●	●	●
POM-CR	WT	PLX	BL	30	2056	1600	360	8.4	1.72	-0.1	-45/90	-49/194	●	●	●
PP	BL	PLX	BL	18	1233	1000	225	5.8	1.19	0.5	5/100	41/212	●	●	●
PP	WT	PLX	BL	18	1233	1000	225	5.8	1.19	0.5	5/100	41/212	●	●	●
PP	BL	PP	WT	16	1096	600	135	5.5	1.13	0.5	5/100	41/212	●	●	●
PP	WT	PP	WT	16	1096	600	135	5.5	1.13	0.5	5/100	41/212	●	●	●

BL (Blue), WT (White)

All measurements and tolerances apply at 21 °C; for temperature deviations please see Prolink manual chapter 4.4 "Temperature influence".
All imperial dimensions (inches) are rounded off.

[1] Flex radii: r1 = side flex, r2 = front flex on roller, r3 = back flex on load bearing roller, r4 = back flex on Hold Down shoe, r5 = back flex on roller

[2] Complies with FDA 21 CFR | Complies with (EU) 10/2011 and (EC) 1935/2004 regulations regarding the raw materials used and the migration thresholds | Complies with Japanese MHLW Notification 370

● = available | – = not available | empty cells = not tested

[3] More materials and colors on request

S18 SPR | Sprockets

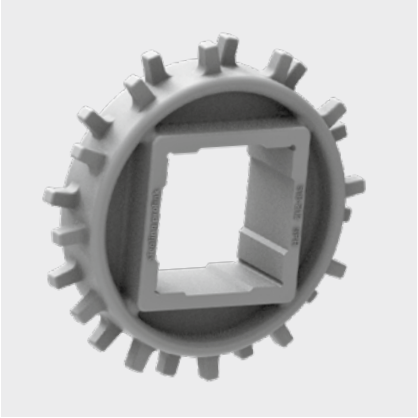

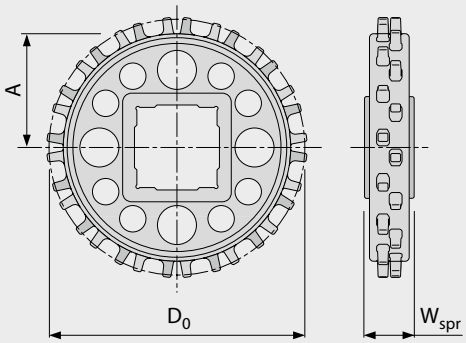

Main dimensions

Sprocket size (Number of teeth)		Z6	Z9	Z12	Z16	Z20
W_{spr}	mm	20.0	25.0	25.0	25.0	25.0
	inch	0.79	0.98	0.98	0.98	0.98
D_0	mm	50.6	74.1	97.9	129.9	162.0
	inch	1.99	2.92	3.85	5.11	6.38
A_{max}	mm	19.2	30.9	42.8	58.8	75.0
	inch	0.76	1.22	1.69	2.31	2.95
A_{min}	mm	16.6	29.0	41.3	57.7	74.1
	inch	0.65	1.14	1.63	2.27	2.92

Shaft bores (● = Round, ■ = Square; ❍ or ❑ = mold to order; * = not possible with G tab belts)

20	mm	●*				
25	mm		● / ■*	●	●	●
30	mm			●	●	●
40	mm			● / ■	● / ■	❍ / ■
0.75	inch	●*				
1	inch		● / ■*	●	●	●
1.25	inch			●	●	●
1.5	inch			❍ / ■	❍ / ■	❍ / ■

Material: PA, Color: LG

LG (Light gray)

All measurements and tolerances apply at 21 °C.
All imperial dimensions (inches) are rounded off.
For detailed sprocket and shaft dimensions see appendix 6.3
Number of sprockets (sprocket spacing distance) see chapter 3.2

S18-44 GRT PMC

Open version (44%) base module with "wave-like" profile for better release and higher stiffness

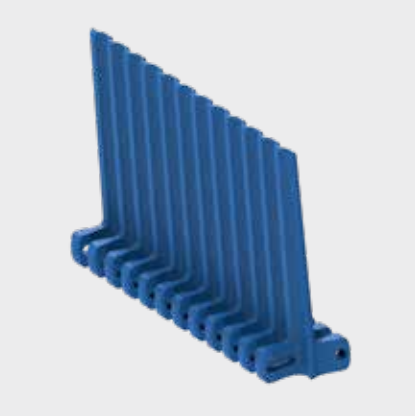

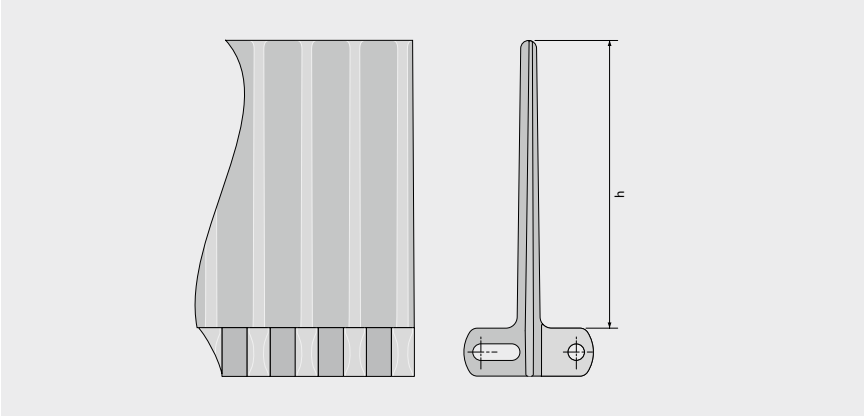

Basic data

Material	Color	Height (h)
		75 mm 3 inch
POM	BL	●
POM	WT	●
PP	BL	●
PP	WT	●

Molded width: 152 mm (6.0 in)

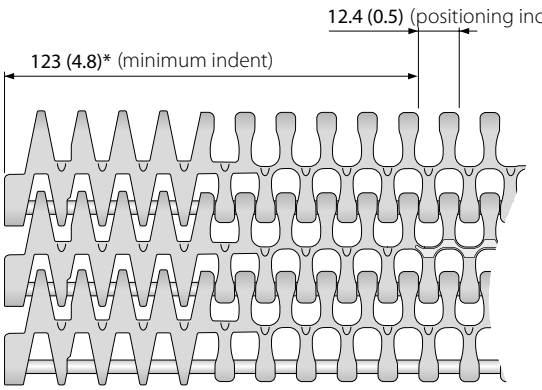

C_c 1.7

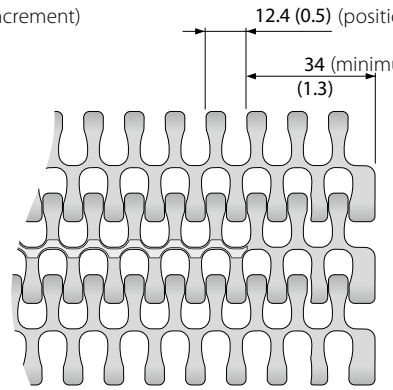

C_c 2.2

* indent of 67 mm (2.6 in) feasible, but influence to C_c possible

BL (Blue), WT (White)

All measurements and tolerances apply at 21 °C; for temperature deviations please see Prolink manual chapter 4.4 "Temperature influence".
All imperial dimensions (inches) are rounded off.
Note: Use of accessory in a belt may impact on the minimum design radii. Please see chapter 6.3 for further information.

S18-44 CTP

Open area (44 %) for excellent air circulation and drainage | Cone top (pointed studs) surface pattern for superior grip



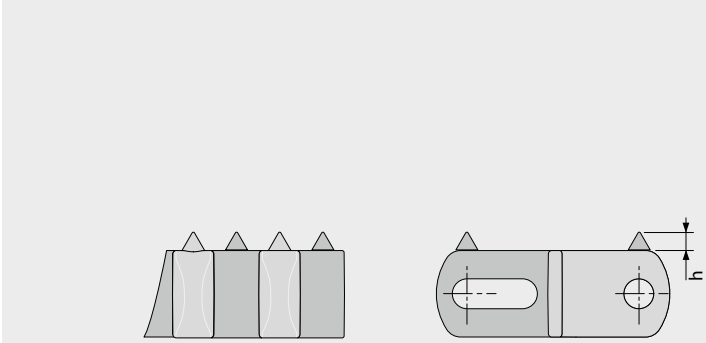

Basic data

Material	Color	Height (h)
		2.8 mm 0.11 inch
POM	BL	●

Molded width: 152 mm (6.0 in)

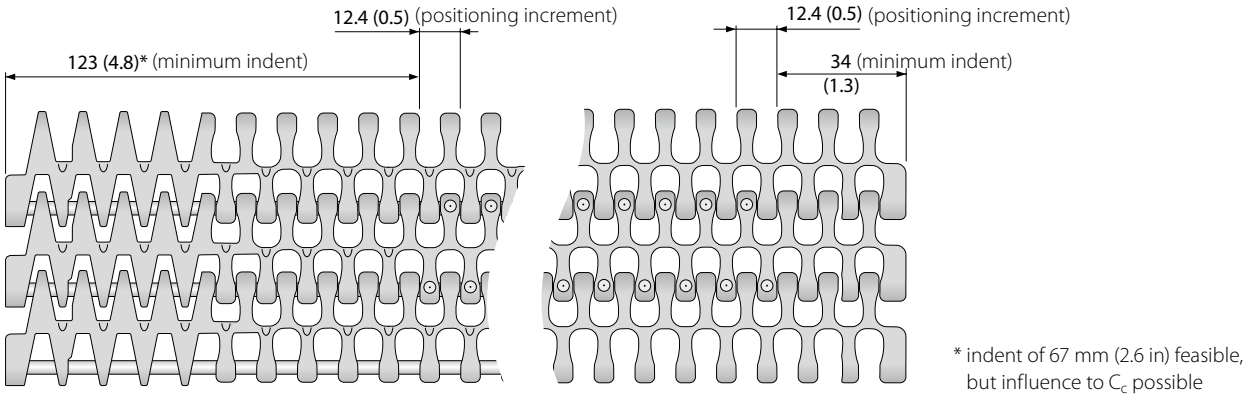

C_c 1.7

C_c 2.2

* indent of 67 mm (2.6 in) feasible, but influence to C_c possible

BL (Blue)

All measurements and tolerances apply at 21 °C; for temperature deviations please see Prolink manual chapter 4.4 "Temperature influence".
All imperial dimensions (inches) are rounded off.
Note: Use of accessory in a belt may impact on the minimum design radii. Please see chapter 6.3 for further information.

S18 SG | Side guards

Lane divider to separate products at curve belt applications

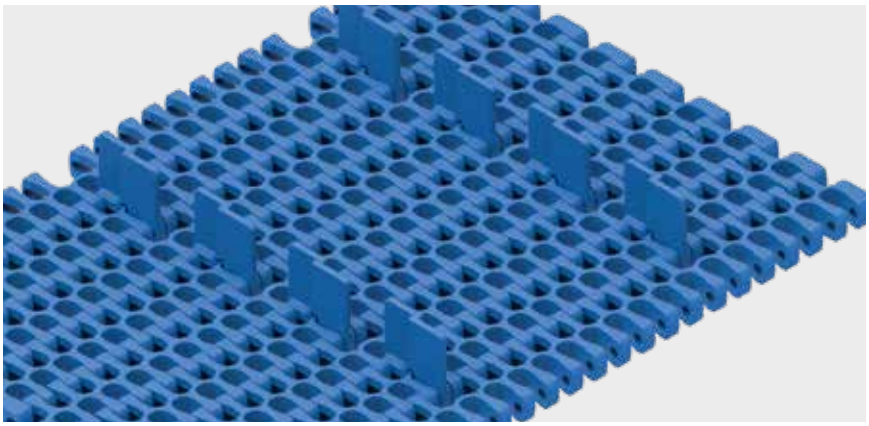

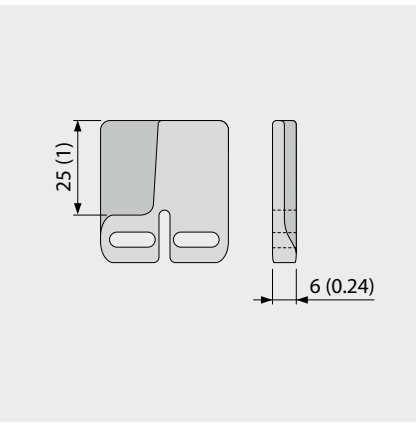

Basic data

Material	Color	Height (h)
		25 mm 1 inch
PE	BL	●

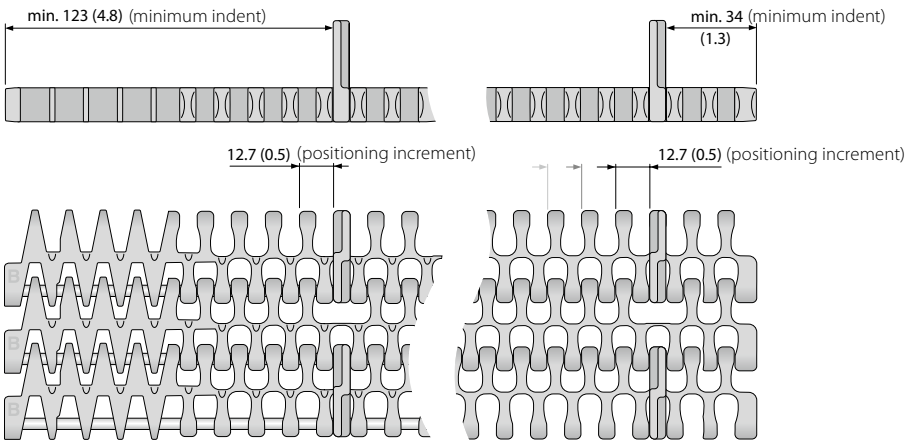

C_c 1.7 C_c 2.2

BL (Blue)

All measurements and tolerances apply at 21 °C; for temperature deviations please see Prolink manual chapter 4.4 "Temperature influence".
All imperial dimensions (inches) are rounded off.
Note: Use of accessory in a belt may impact on the minimum design radii. Please see chapter 6.3 for further information.

SERIES 18 | **INSTALLATION NOTES**

Side flexing and spiral belt | Pitch 25.4 mm (1 in)

Preferred travel direction

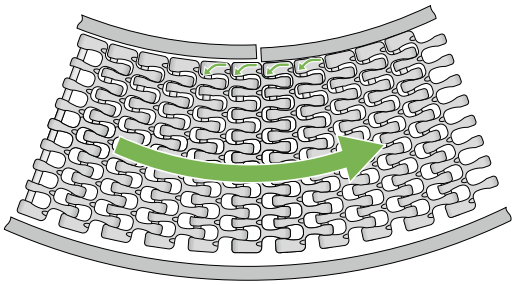

Curve conveyor

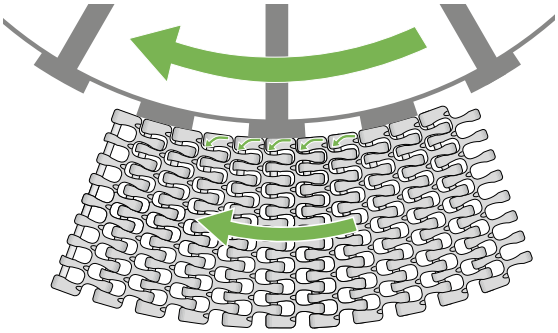

Cage driven spiral

Curve direction/Pin position clockwise -> Belt CW (clockwise)

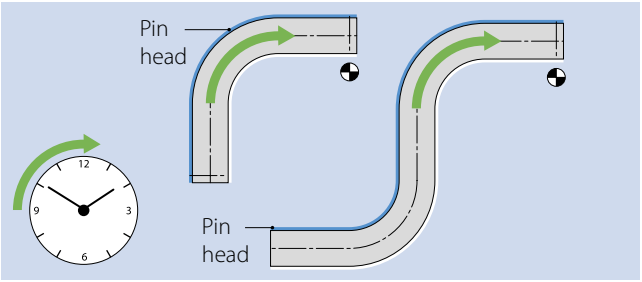

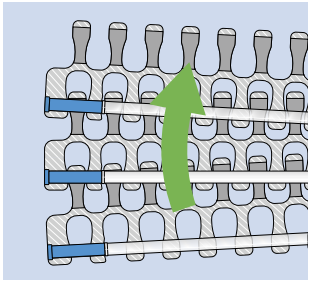

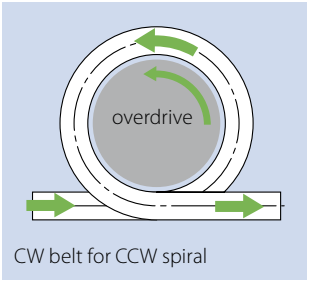

CW belt for CCW spiral

Curve direction/Pin position Counterclockwise -> Belt CCW (Counterclockwise)

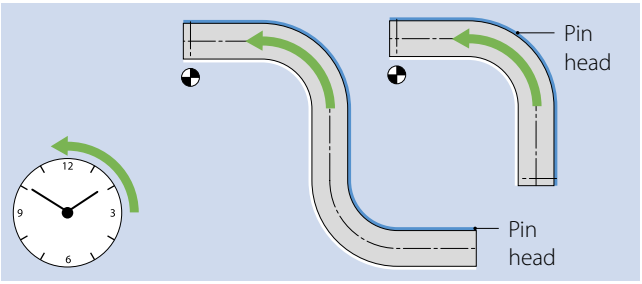

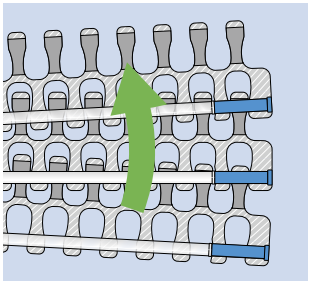

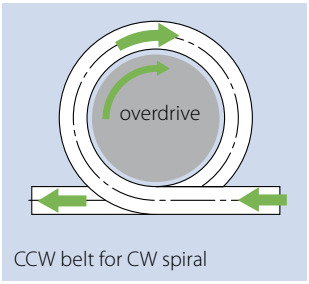

CCW belt for CW spiral

Surface/Sprocket position

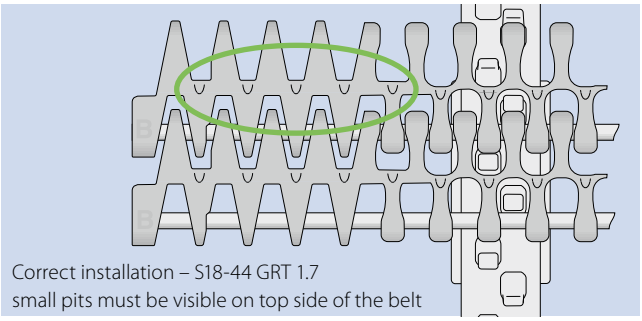

Correct installation – S18-44 GRT 1.7
small pits must be visible on top side of the belt

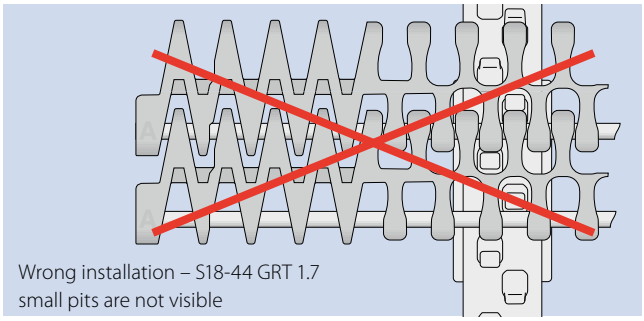

Wrong installation – S18-44 GRT 1.7
small pits are not visible

Further information in chapter 3 and 5

MOVEMENT SYSTEMS

siegling prolink
modular belts

SERIES 19

Straight running belts
Pitch 63.5 mm (2.5 in)

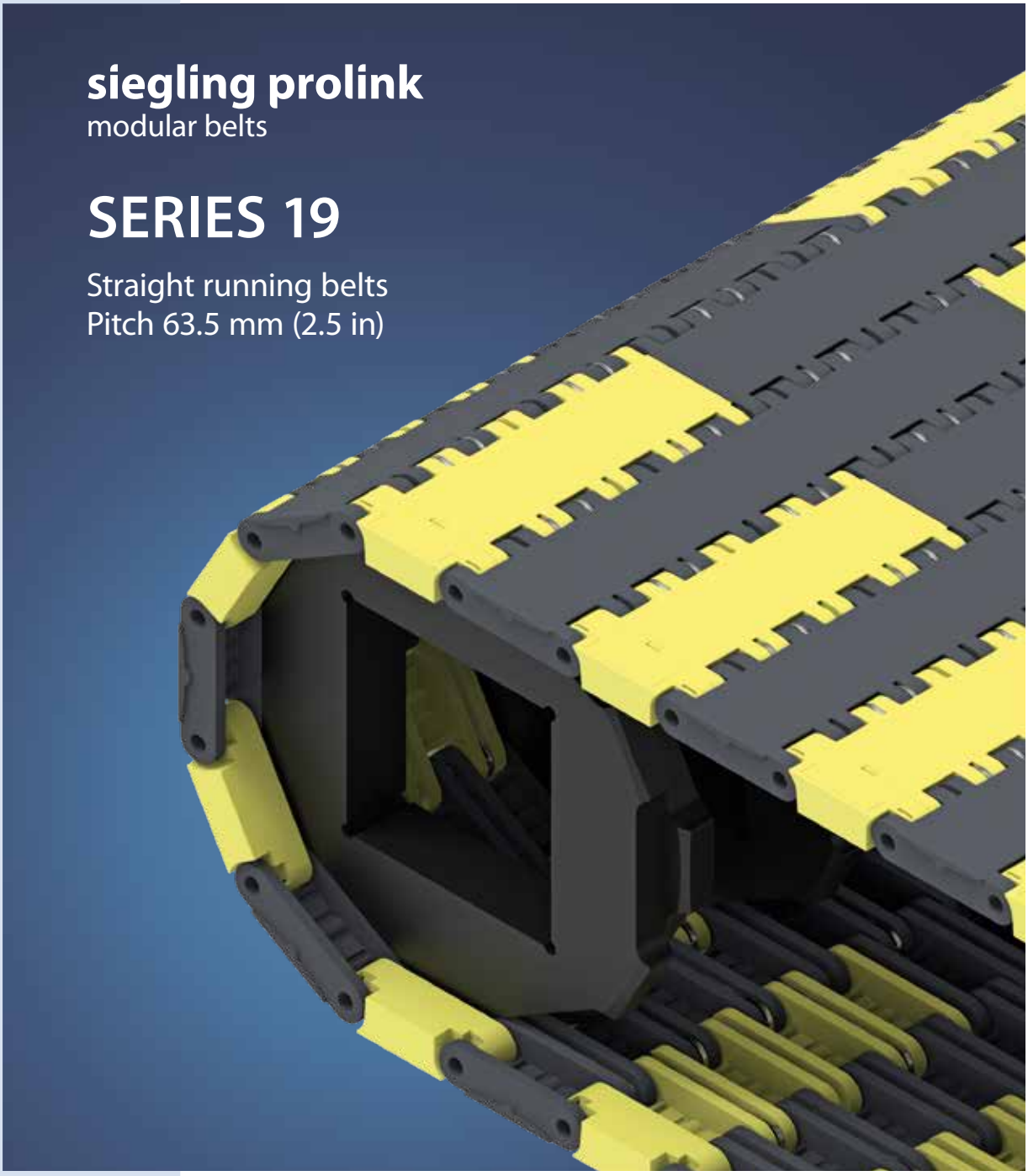

Belts for heavy-duty applications

Side view scale 1:1

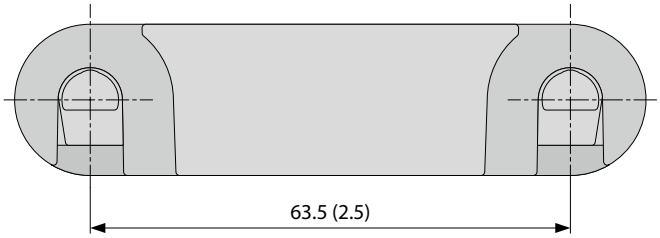

Available surface pattern and opening area

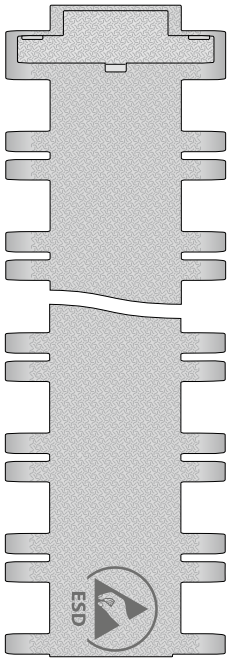

S19-0 SRS
Closed, slip-resistant surface

S19-0 SRS HC
Closed, slip-resistant surface, highly conductive

Design characteristics

- Extreme heavy-duty belt for high load applications and smooth running condition
- Reinforcement links and low wear inserts can be integrated as desired
- Robust design with large surface contact area and strong sprocket design ensures superior wear life
- Flame retardant (complies with DIN EN 135011 Bfl-S1) and highly conductive (surface resistivity < 10^6 Ω)

Basic data

Pitch	63.5 mm (2.5 in)
Belt width min.	304.8 mm (12 in)
Width increments	19.1 mm (0.75 in)
Hinge pins	8.0 mm (0.31 in) made of stainless steel

Sprockets
in different sizes with round or square bore, one part and split

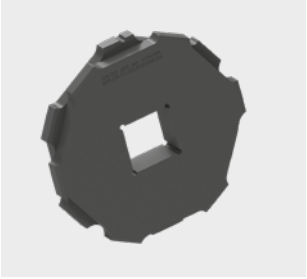

Wheelstopper
used for securing the position of vehicles on the belt



S19-0 SRS | 0 % Opening | Slip Resistant Surface

Extreme heavy-duty belt | Steel Reinforcement Links (REL) possible | Wear inserts (INS) possible

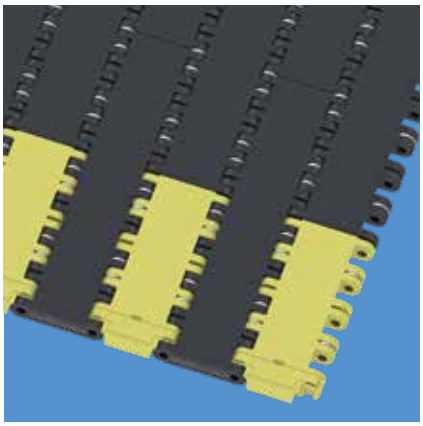

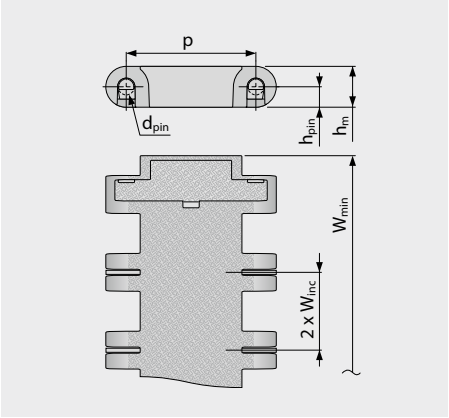

Variant specific dimensions [mm (in)]

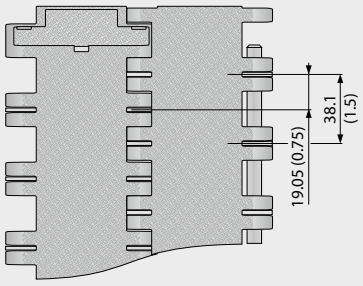

Belt dimensions

	p	d_{pin}	h_m	h_{pin}	h_s	W_{min}	W_{inc}	W_{tol}	Minimum flex radii[1]				
	Pitch	Pin Ø	Thickness	Pin position	Height	Width min.	Width Increment	Width tolerance [%]	r1 C_c x W_B	r2	r3	r4	r5
mm	63.5	8.0	20.0	10.0	0.0	304.8	19.1	±0.2	–	63.5	127.0	190.5	63.5
inch	2.50	0.31	0.79	0.39	0.0	12.0	0.75	±0.2	–	2.50	5.00	7.50	2.50

Available standard materials [3]

Belt		Pin	REL Spacing		Nominal belt pull, straight		Weight (incl. INS)		Temperature		Width deviation	Certificates[2]
Material	Color	Material	[in]	[%]	[N/mm]	[lb/ft]	[kg/m²]	[lb/ft²]	[°C]	[°F]	[%]	Flame retardant
PA-FR*	BK	SS	1.5	100	170	11649	27.2	5.57	-40/120	-40/248	0.28	●
PA-FR*	BK	SS	3.0	50	130	8908	24.1	4.94	-40/120	-40/248	0.28	●
PA-FR*	BK	SS	4.5	33	120	8226	22.0	4.51	-40/120	-40/248	0.28	●
PA-FR*	BK	SS	6.0	25	100	6852	21.1	4.32	-40/120	-40/248	0.28	●
PA-FR*	BK	SS	–	0	80	5482	21.0	4.30	-40/120	-40/248	0.28	●
POM	AT	SS	1.5	100	180	12334	29.8	6.10	-45/90	-49/194	-0.1	–
POM	AT	SS	3.0	50	140	9593	26.7	5.47	-45/90	-49/194	-0.1	–
POM	AT	SS	4.5	33	130	8908	24.7	5.06	-45/90	-49/194	-0.1	–
POM	AT	SS	6.0	25	110	7535	23.7	4.85	-45/90	-49/194	-0.1	–
POM	AT	SS	–	0	90	6167	23.6	4.83	-45/90	-49/194	-0.1	–

* Values valid for dry applications (RH <50 %). Belts in PA-FR material will absorb water in wet environments, causing them to expand and reduce the nominal belt pull capacity.

■ AT (Anthracite), ■ BK (Black)

All measurements and tolerances apply at 21 °C; for temperature deviations please see Prolink manual chapter 4.4 "Temperature influence".
All imperial dimensions (inches) are rounded off.

[1] Flex radii: r1 = side flex, r2 = front flex on roller, r3 = back flex on load bearing roller, r4 = back flex on Hold Down shoe, r5 = back flex on roller

[2] Complies with DIN EN 13501-1 Bfl-s1 (and DIN 4102 B1)

● = available | – = not available | empty cells = not tested

[3] More materials and colors on request

S19-0 SRS HC | 0 % Opening | Slip Resistant Surface | Highly Conductive

Extreme heavy-duty belt | Steel Reinforcement Links (REL) possible | Wear inserts (INS) possible

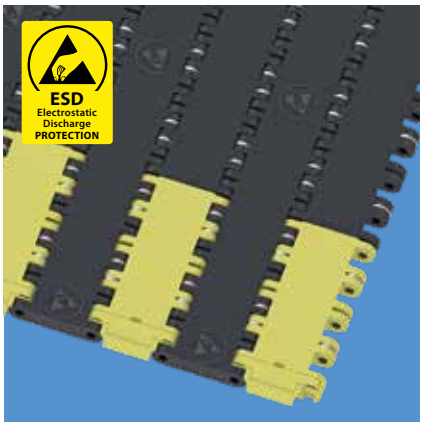

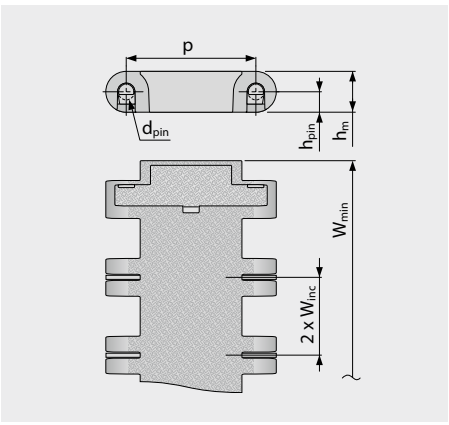

Variant specific dimensions [mm (in)]

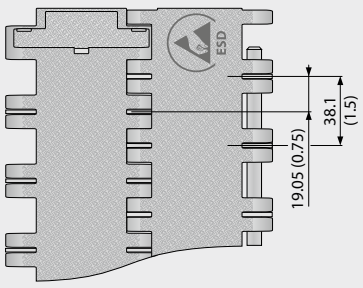

Belt dimensions

	p	d_{pin}	h_m	h_{pin}	h_s	W_{min}	W_{inc}	W_{tol}	Minimum flex radii[1]			
	Pitch	Pin Ø	Thickness	Pin position	Height	Width min.	Width Increment	Width tolerance [%]	r1 C_c x W_B	r2	r3	r4	r5
mm	63.5	8.0	20.0	10.0	0.0	304.8	19.1	±0.2	–	63.5	127.0	190.5	63.5
inch	2.50	0.31	0.79	0.39	0.0	12.0	0.75	±0.2	–	2.50	5.00	7.50	2.50

Available standard materials [3]

Belt		Pin	REL Spacing		Nominal belt pull, straight		Weight (incl. INS)		Temperature		Width deviation	Certificates[2]
Material	Color	Material	[in]	[%]	[N/mm]	[lb/ft]	[kg/m²]	[lb/ft²]	[°C]	[°F]	[%]	Flame retardant
PA-FRHC*	BK	SS	1.5	100	155	10621	27.2	5.57	-40/120	-40/248	0.28	●
PA-FRHC*	BK	SS	3.0	50	115	7880	24.1	4.94	-40/120	-40/248	0.28	●
PA-FRHC*	BK	SS	4.5	33	110	7537	22.0	4.51	-40/120	-40/248	0.28	●
PA-FRHC*	BK	SS	6.0	25	90	6167	21.1	4.32	-40/120	-40/248	0.28	●
PA-FRHC*	BK	SS	–	0	70	4797	21.0	4.30	-40/120	-40/248	0.28	●
POM-HC	AT	SS	1.5	100	160	10963	29.8	6.10	-45/90	-49/194	-0.1	–
POM-HC	AT	SS	3.0	50	135	9250	26.7	5.47	-45/90	-49/194	-0.1	–
POM-HC	AT	SS	4.5	33	120	8223	24.7	5.06	-45/90	-49/194	-0.1	–
POM-HC	AT	SS	6.0	25	100	6852	23.7	4.85	-45/90	-49/194	-0.1	–
POM-HC	AT	SS	–	0	80	5482	23.6	4.83	-45/90	-49/194	-0.1	–

* Values valid for dry applications (RH <50 %). Belts in PA-FRHC material will absorb water in wet environments, causing them to expand and reduce the nominal belt pull capacity.

■ AT (Anthracite), ■ BK (Black)

All measurements and tolerances apply at 21 °C; for temperature deviations please see Prolink manual chapter 4.4 "Temperature influence".
All imperial dimensions (inches) are rounded off.

[1] Flex radii: r1 = side flex, r2 = front flex on roller, r3 = back flex on load bearing roller, r4 = back flex on Hold Down shoe, r5 = back flex on roller

[2] Complies with DIN EN 13501-1 Bfl-s1 (and DIN 4102 B1)

● = available | – = not available | empty cells = not tested

[3] More materials and colors on request

S19 SPR | Sprockets

Deep tooth engagement for heavy loads | Machined sprocket

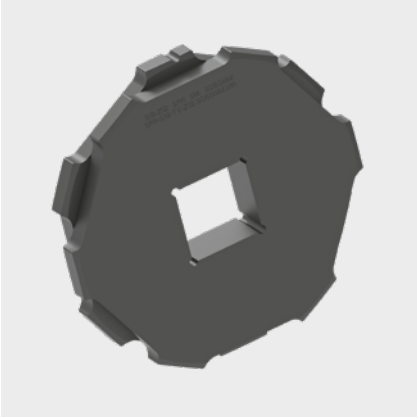

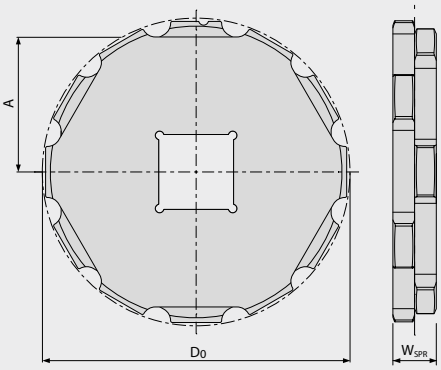

Main dimensions

Sprocket size (Number of teeth)		Z8	Z10	Z12	Z14	Z16
W_{spr}	mm	35	35	35	35	35
	inch	1.38	1.38	1.38	1.38	1.38
D_0	mm	168.2	207.8	247.6	287.6	327.4
	inch	6.62	8.18	9.75	11.32	12.89
A_{max}	mm	72.4	92.5	112.7	132.8	152.9
	inch	2.85	3.64	4.44	5.23	6.02
A_{min}	mm	66.9	88.0	108.9	129.5	150.0
	inch	2.63	3.46	4.29	5.10	5.90

Shaft bores

	mm	60	60 – 90	60 – 120	60 – 140	60 –160
	inch	2.0	2.5 – 3.5	2.5 – 4.5	2.5 – 5.5	2.5 – 7.5

The machined sprockets are available in different sizes and bore diameter.
The chart shows a selection of available sizes – other sizes on request.

Material: PA, Color: BK

■ BK (Black)

All measurements and tolerances apply at 21 °C.
All imperial dimensions (inches) are rounded off.
For detailed sprocket and shaft dimensions see appendix 6.3

S19 SPR-SP | Split Sprockets

Easy assembly without dismounting shaft | Deep tooth engagement for heavy loads | Machined sprocket

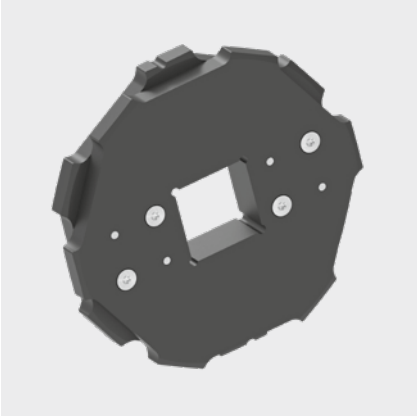

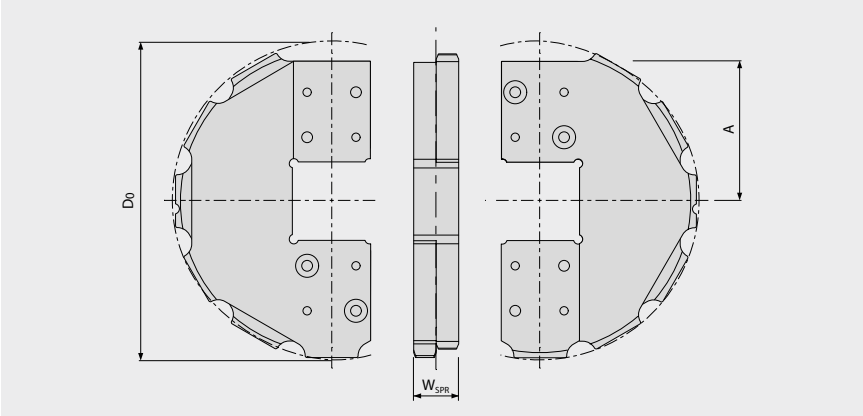

Main dimensions

Sprocket size (Number of teeth)		Z8	Z10	Z12	Z14	Z16
W_{spr}	mm	35	35	35	35	35
	inch	1.38	1.38	1.38	1.38	1.38
D_0	mm	168.2	207.8	247.6	287.6	327.4
	inch	6.62	8.18	9.75	11.32	12.89
A_{max}	mm	72.4	92.5	112.7	132.8	152.9
	inch	2.85	3.64	4.44	5.23	6.02
A_{min}	mm	66.9	88.0	108.9	129.5	150.0
	inch	2.63	3.46	4.29	5.10	5.90

Shaft bores

	mm	60	60 – 90	60 – 120	60 – 140	60 –160
	inch	2.0	2.5 – 3.5	2.5 – 4.5	2.5 – 5.5	2.5 – 7.5

The machined sprockets are available in different sizes and bore diameter.
The chart shows a selection of available sizes – other sizes on request.

Material: PA, Color: BK

■ BK (Black)

All measurements and tolerances apply at 21 °C.
All imperial dimensions (inches) are rounded off.
For detailed sprocket and shaft dimensions see appendix 6.3

S19-0 WSC | Wheelstopper

Smalll and stiff profiles (interrupted for finger plates)

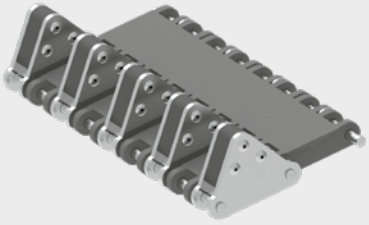

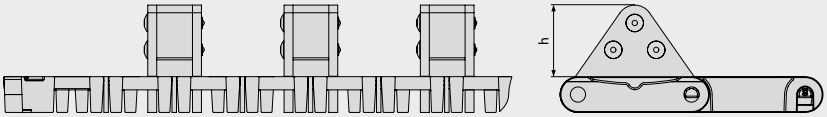

Basic data

Material	Color	Height (h)
		40 mm 1.57 inch
SS/POM	BK/YL	Height and angle customizable

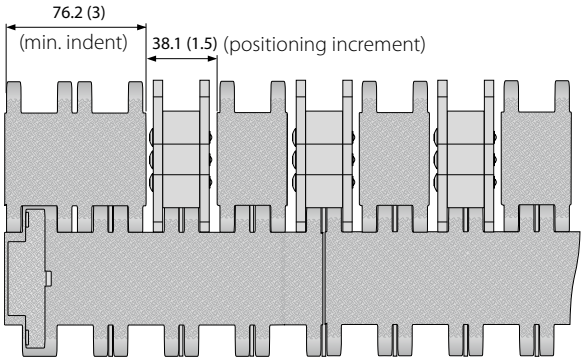

Configuration S19-0 SRS WSC

■ BK (Black), ■ YL (Yellow)

All measurements and tolerances apply at 21 °C; for temperature deviations please see Prolink manual chapter 4.4 "Temperature influence".
All imperial dimensions (inches) are rounded off.
Note: Use of accessory in a belt may impact on the minimum design radii. Please see chapter 6.3 for further information.

1.3 RETAINER RINGS

RTR | Retainer Rings

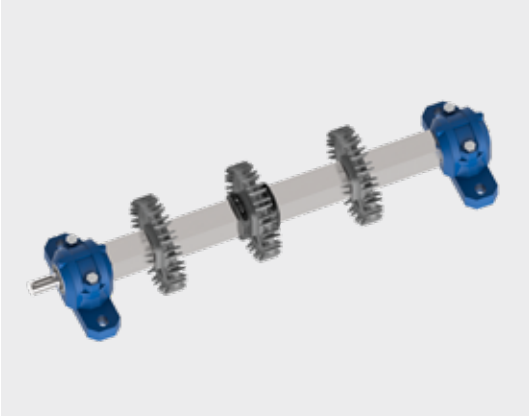



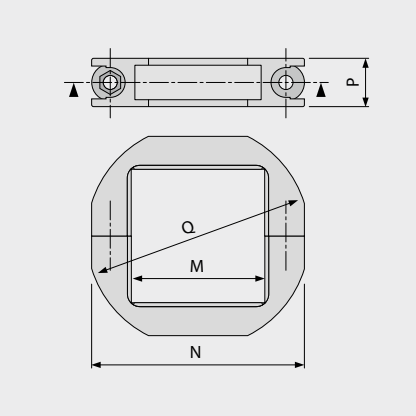

Shaft size	Article number	Designation*	Main dimensions** [mm (in)]			
			M	N	P	Q
SQ 40 mm	98168799	RTR PA LG (SS) SQ40MM	41 (1.6)	65 (2.6)	15 (0.6)	68 (2.7)
SQ 60 mm	98168899	RTR PA LG (SS) SQ60MM	61 (2.4)	86 (3.4)	15 (0.6)	97 (3.8)
SQ 1½ in	98168999	RTR PA LG (SS) SQ1.5IN	39 (1.5)	65 (2.6)	15 (0.6)	67 (2.6)
SQ 2½ in	98169099	RTR PA LG (SS) SQ2.5IN	64 (2.5)	89 (3.5)	15 (0.6)	100 (3.9)

* SS = stainless steel screw and nut

** To verify that a retainer ring is suitable for a specific sprocket check that Q/2 < A
The „A" dimension is the distance from shaft centre to underside of belt.
This value can be found under sprocket data in the belt brochures.

1.4 APPLICATIONS

Fruit and vegetable processing

	Washing	Draining	Incline/decline	Sorting	Conveying	Deep freezing	Palletizing/ de-palletizing	Container conveying	Sterilising/cooling
S1-0 FLT	●		●	●	●				
S1-18 FLT		●	●		●	●			
S2-0 FLT				●	●				
S2-57 GRT	●	●				●			●
S2-57 RRB						●	●	●	●
S2-0 FRT1							●	●	
S4.1-0 FRT1			●				●		
S4.1-21 NTP		●	●						
S5-45 GRT	●	●	●		●	●			●
S5-45 GRT G	●	●	●		●	●			●
S5-45 GRT ST	●	●	●		●	●			●
S6.1-0 FLT		●	●			●			
S6.1-21 FLT	●	●	●		●	●			●
S6.1-23 FLT	●	●	●		●	●			●
S6.1-36 FLT	●	●			●	●			●
S8-0 FLT					●		●	●	
S8-25 RAT							●	●	
S8.1-30 FLT					●			●	
S8.1-30 FLT GT					●			●	
S8-0 FRT1			●				●		
S9-57 GRT	●	●	●			●			●
S9-57 GRT G	●	●	●			●			●
S9.1-57 GRT	●	●	●			●			●
S10-0 FLT			●	●	●				
S10-0 NTP		●	●						
S10-0 FRT1			●		●			●	
S10-22 FLT	●	●	●		●				
S10-36 FLT	●	●			●	●			●
S10-36 LRB			●		●				
S11-45 GRT					●				
S11-45 GRT HD					●				
S11 Combo					●				
S13-0 FLT				●	●				
S13-34 FLT		●		●					
S14-0 FLT					●		●	●	
S14-25 FLT	●	●		●	●		●	●	
S14-25 CUT	●			●	●	●			
S14-25 FRT1								●	

	Washing	Draining	Incline/decline	Sorting	Conveying	Deep freezing	Palletizing/ de-palletizing	Container conveying	Sterilising/cooling
S15-47 GRT		●							
S15-47 RSA		●							
S17-0 FLT					●		●	●	
S18-44 GRT 2.2		●			●	●			●
S18-44 GRT 2.2 G		●			●	●			●
S18-44 HDK 2.2		●			●	●			
S18-44 GRT 1.7		●			●	●			
S18-44 FRT1 2.2		●	●		●				

1.4 APPLICATIONS

Meat and poultry processing

	Cutting/jointing	Trimming/filleting	Topping/Breading conveyors	Cooling/freezing	Conveying	Incline/decline	Metal detectors	Packaging
S2-0 FLT					●		●	●
S2-12 FLT							●	
S2-0 FRT1								●
S4.1-0 FLT					●		●	●
S4.1-0 FRT1						●		●
S4.1-21 FLT							●	
S5-45 GRT				●		●		●
S5-45 NTP					●			●
S5-39 FRT1/S5-33 FRT2								●
S5-45 GRT G				●		●		●
S5-45 GRT RG				●		●		●
S5-45 GRT ST				●		●		●
S6.1-0 FLT	●	●			●	●	●	●
S6.1-0 NTP	●	●				●	●	
S6.1-0 CTP					●	●	●	●
S6.1-21 FLT					●	●	●	
S6.1-23 FLT					●	●	●	
S6.1-36 FLT				●				
S8.1-30 FLT								●
S8.1-30 FLT GT								●
S8-0 FRT1						●		●
S9-57 GRT				●		●		
S9-57 GRT G				●		●		
S9.1-57 GRT				●		●		
S10-0 FLT				●	●	●	●	
S10-0 NTP					●			
S10-0 FRT1					●	●		●
S10-22 FLT				●	●	●	●	
S10-36 FLT				●				
S10-36 LRB					●	●		
S11-45 GRT					●			●
S11-45 GRT HD					●			●
S11-33 FRT2								●
S11 Combo					●			
S13-0 CTP		●				●		
S14-0 FLT							●	●
S14-25 CUT				●				
S14-25 FRT1								●

	Cutting/jointing	Trimming/filleting	Topping/Breading conveyors	Cooling/freezing	Conveying	Incline/decline	Metal detectors	Packaging
S15-47 GRT			●	●				
S15-47 RSA			●					
S18-44 GRT 2.2			●	●	●			●
S18-44 GRT 2.2 G			●	●	●			●
S18-44 HDK 2.2			●	●	●			●
S18-44 GRT 1.7			●	●	●			●
S18-44 FRT1 2.2			●	●	●	●		●

1.4 APPLICATIONS

Baked goods manufacturing

	Emptying molds	Spirals	Cooling/freezing tunnels	Conveying	Decorating/glazing	Metal detectors	Conveying sheets/molds	Laminating	Packaging
S1-0 FLT	●						●		●
S1-18 FLT									
S2-0 FLT				●	●		●	●	●
S2-57 GRT			●			●		●	
S2-57 RRB			●			●			
S4.1-0 FLT			●	●	●	●		●	●
S4.1-0 NPY			●	●		●		●	
S4.1-0 FRT1				●					●
S4.1-21 FLT			●	●	●	●		●	●
S5-45 GRT	●		●	●			●		
S5-45 GRT G	●	●	●	●			●		
S5-45 GRT RG	●	●	●	●			●		
S5-45 GRT ST	●	●	●	●			●		
S5-45 GRT BT		●							
S6.1-0 FLT	●			●		●			●
S6.1-21 FLT			●	●					
S6.1-23 FLT			●	●					
S6.1-36 FLT			●						
S8-0 FLT	●						●		●
S8-25 RAT							●		
S8.1-30 FLT	●						●		●
S8.1-30 FLT GT	●						●		●
S8-0 FRT1				●					●
S9-57 GRT		●	●	●			●		
S9-57 GRT G		●	●	●			●		
S9-57 GRT F2, F3, F4 – F8		●							
S9.1-57 GRT		●		●			●		
S10-0 FLT			●	●	●	●			
S10-0 NTP				●					
S10-22 FRT1				●			●		●
S10-22 FLT			●			●			
S10-36 FLT			●						
S10-36 LRB				●					
S11-45 GRT				●			●		●
S11-45 GRT HD				●			●		●
S11 Combo		●		●					
S13-0 FLT			●	●	●	●		●	
S13-0 NPY			●	●		●		●	
S13-0 CTP				●	●				
S13-34 FLT			●	●	●				

	Emptying molds	Spirals	Cooling/freezing tunnels	Conveying	Decorating/glazing	Metal detectors	Conveying sheets/molds	Laminating	Packaging
S14-0 FLT						●			●
S14-25 FLT			●	●		●	●		●
S14-25 FRT1	●						●		●
S15-47 GRT			●	●					
S15-47 RSA			●	●					
S17-0 FLT	●						●		●
S18-44 GRT 2.2		●	●	●			●		●
S18-44 GRT 2.2 G		●	●	●			●		●
S18-44 HDK 2.2			●	●			●		●
S18-44 GRT 1.7		●	●	●			●		●
S18-44 FRT1 2.2		●		●					●

1.4 APPLICATIONS

Seafood processing

	Incline/decline	Trimming/Slicing/ Filleting	Draining	Inspection benches	Conveying	Freezing/ decorating	Metal detectors	Packaging
S1-0 FLT	●			●	●			●
S1-18 FLT	●		●		●	●		●
S2-0 FLT				●	●			●
S2-12 FLT					●			
S2-0 FRT1					●			●
S4.1-0 FLT							●	●
S4.1-0 FRT1								●
S4.1-21 FLT							●	
S4.1-21 NTP	●		●			●		
S5-45 GRT	●		●			●		●
S5-45 NTP	●							●
S5-45 GRT G	●		●			●		●
S5-45 GRT RG	●		●			●		●
S5-45 GRT ST	●		●			●		●
S6.1-0 FLT	●			●	●		●	●
S6.1-0 NTP	●						●	
S6.1-0 CTP	●				●		●	●
S6.1-21 FLT	●		●	●	●	●		●
S6.1-23 FLT	●		●	●	●	●		●
S6.1-36 FLT			●			●		
S8.1-30 FLT								●
S8.1-30 FLT GT								●
S8-0 FRT1								●
S9-57 GRT	●		●					
S9-57 GRT G	●		●					
S9.1-57 GRT	●		●					
S10-0 FLT	●			●	●		●	
S10-0 NTP	●		●			●		
S10-0 FRT1					●			●
S10-22 FLT	●		●		●	●	●	
S10-36 FLT			●			●		
S10-36 LRB	●				●			
S11-45 GRT					●			●
S11-45 GRT HD					●			●
S11 Combo					●			
S13-0 CTP	●	●						
S13-34 FLT			●		●			

	Incline/decline	Trimming/Slicing/ Filleting	Draining	Inspection benches	Conveying	Freezing/ decorating	Metal detectors	Packaging
S14-0 FLT							●	●
S14-25 CUT			●			●		
S14-25 FRT1								●
S18-44 GRT 2.2			●		●	●		●
S18-44 GRT 2.2 G			●		●	●		●
S18-44 HDK 2.2			●		●	●		●
S18-44 GRT 1.7			●		●	●		●
S18-44 FRT1 2.2	●		●		●			●

1.4 APPLICATIONS

Automotive/tire manufacturing

	Vehicle conveying	Tire conveying	Skid conveying	Worker belts
S1-0 FLT	●	●		●
S1-0 SRS	●	●	●	●
S1-18 FLT	●	●		●
S1-0 NSK	●			●
S1-0 FRT1				●
S4.1-0 FLT				●
S5-45 GRT		●		
S5-45 NTP		●		
S5-45 GRT G		●		
S5-45 GRT RG		●		
S5-45 GRT ST		●		
S6.1-0 CTP		●		
S7-0 FLT	●		●	
S7-0 SRS	●		●	●
S7-6 FLT	●		●	
S7-0 NSK	●			●
S7-6 NSK	●			●
S7-0 FRT1		●		
S8-0 FLT	●			●
S8-0 SRS		●		●
S8-0 NSK		●		●
S8-25 RAT		●		
S8-0 RTP A90		●		
S9-57 GRT		●		
S9-57 NTP		●		
S9-57 GRT G		●		
S9.1-57 GRT		●		
S17-0 FLT	●			●
S17-0 SRS	●			●
S19-0 SRS	●		●	●

Logistics

	General logistics	Parcel sorting	Airports
S1-0 FLT			●
S1-0 SRS	●	●	●
S1-0 NSK	●		
S2-0 FLT			●
S4.1-0 FRT1	●	●	●
S5-45 GRT	●	●	
S5-39 FRT1/S5-33 FRT2		●	
S5-45 GRT G	●	●	
S5-45 GRT RG	●	●	
S5-45 GRT ST	●	●	
S5-45 GRT BT	●		
S6.1-0 CTP		●	
S8-0 FLT	●	●	●
S8.1-30 FLT	●		
S8.1-30 FLT GT	●		
S8-0 FRT1	●	●	●
S8-0 RTP A90	●	●	
S9-57 GRT	●	●	
S9-57 GRT G	●	●	
S9.1-57 GRT	●	●	
S11-45 GRT	●	●	
S11-45 GRT HD	●	●	
S11-33 FRT2		●	
S11 Combo	●		
S14-0 FLT	●	●	●
S17-0 FLT	●	●	●
S18-44 GRT 2.2	●	●	
S18-44 GRT 2.2 G	●	●	
S18-44 HDK 2.2	●	●	
S18-44 GRT 1.7	●	●	
S18-44 FRT1 2.2			●

1.4 APPLICATIONS

Other applications

	Textile industry	Glass industry	Deep freezing/ freezing towers	Dairy products	Conveying people	Ski lift/access belts	Unit goods	Palette conveyors	Paper	Cooling tunnels	Corrugated cardboard
S1-0 FLT				●	●	●	●		●		
S1-0 SRS					●			●			
S1-18 FLT				●							
S1-0 NSK					●						
S1-0 FRT1					●	●					
S2-0 FLT	●	●		●					●		
S2-12 FLT				●							
S2-57 GRT				●							
S2-57 RRB		●		●							
S2-0 FRT1				●			●				
S4.1-0 FLT	●	●		●			●		●		●
S4.1-0 FRT1		●					●		●		●
S4.1-21 FLT	●	●		●					●		
S5-45 GRT			●	●							
S5-39 FRT1/S5-33 FRT2				●							
S5-45 GRT G			●	●							
S5-45 GRT RG			●	●							
S5-45 GRT ST			●	●							
S5-45 GRT BT								●			
S6.1-0 FLT		●		●			●				
S6.1-0 NTP				●							
S6.1-0 CTP				●							
S6.1-21 FLT				●							
S6.1-23 FLT				●							
S6.1-36 FLT				●							
S7-0 FLT					●		●	●			
S7-0 SRS					●		●	●			
S7-6 FLT								●			
S7-0 NSK					●						
S7-0 FRT1							●	●			
S8-0 FLT	●	●			●		●	●	●		●
S8-0 NSK					●				●		
S8-0 FRT1	●	●					●		●		●
S8-0 RTP A90							●				
S9-57 GRT			●	●							
S9-57 GRT G			●	●							
S9-57 GRT F2, F3, F4 – F8			●								
S9.1-57 GRT			●	●							

	Textile industry	Glass industry	Deep freezing/ freezing towers	Dairy products	Conveying people	Ski lift/access belts	Unit goods	Palette conveyors	Paper	Cooling tunnels	Corrugated cardboard
S10-0 FLT				●							
S10-0 NTP				●							
S10-0 FRT1				●							
S10-22 FLT				●							
S10-36 FLT				●							
S11-45 GRT	●			●			●		●		
S11-45 GRT HD	●			●			●		●		
S11-33 FRT2				●							
S11 Combo			●					●			
S14-0 FLT	●	●					●				
S14-0 CUT			●							●	
S15-47 GRT										●	
S15-47 RSA										●	
S17-0 FLT	●	●			●		●	●	●		●
S18-44 GRT 2.2				●			●		●		
S18-44 GRT 2.2 G				●			●		●		
S18-44 HDK 2.2				●			●		●		
S18-44 GRT 1.7				●			●		●		



2 MATERIALS

2.1 Plastic materials (Properties)

2.2 Other materials

2.1 PLASTIC MATERIALS (PROPERTIES)

PA (Polyamide) and
PA-FR (PA flame retardant)
- good wear resistance in dry applications
- good fatigue resistance
- temperature range – 40 to + 120 °C (– 40 to 248 °F)
- short-term temperature resistance up to 135 °C (275 °F)
- FDA/EU approved for direct food contact
- flame retardant according to UL94-V2
- good UV-A/UV-B/UV-C resistance*

PA-FRHC (Polyamide flame retardant, highly conductive)
- good wear resistance in dry applications
- good fatigue resistance
- surface resistivity < 10^6 Ω according to ISO 21178)
- temperature range – 40 to + 120 °C (– 40 to 248 °F)
- short-term temperature resistance up to 135 °C (275 °F)
- flame retardant according to UL94-V2

PA-HT (PA high temperature resistant)
- material reinforced with fiberglass
- absorbs little water in humid environments
- very stiff and durable
- temperature range – 30 to + 155 °C (– 22 to 311 °F)
- very high short-term temperature resistance up to 180 °C (356 °F)
- FDA/EU approved for direct food contact (only color BL)

PBT (Polybutylene terephthalate)
- good wear resistance
- very good abrasive resistance
- good strength and stiffness
- temperature range – 40 to + 120 °C (– 40 to 248 °F)
- not recommended for use in hot water > 50 °C (122°F)
- FDA/EU approved for direct food contact

PE (Polyethylene)
- very good chemical resistance to acids and alkalis
- very good release properties due to low surface tension
- good friction and abrasion behavior
- impact resistant
- low specific weight
- limited strength
- temperature range – 70 to + 65 °C (– 94 °F to 149 °F)
- FDA/EU approved for direct food contact
- good UV-A/UV-B/UV-C resistance*

PE-I (PE impact resistant)
- modified PE
- very good chemical resistance to acids and alkalis
- very good release properties due to low surface tension
- good friction and abrasion behavior
- highly impact resistant
- low specific weight
- limited strength
- temperature range – 70 to + 65 °C (– 94 °F to 149 °F)
- FDA/EU approved for direct food contact
- good UV-A/UV-B/UV-C resistance*

PE-MD (PE metal detectable)
- modified PE
- material easily detected in metal detectors
- very good chemical resistance to acids and alkalis
- very good release properties due to low surface tension
- good friction and abrasion behavior
- highly impact resistant
- low specific weight
- limited strength
- temperature range – 70 to + 65 °C (– 94 °F to 149 °F)
- FDA/EU approved for direct food contact
- good UV-A/UV-B/UV-C resistance*

* **UV resistant materials:** The Prolink materials listed as UV resistant are formulated to prevent mechanical degradation of the polymer. Tests simulating 5 years UV-C exposure (300 working days/year, one shift) show no reduction of tensile strength of the Prolink materials listed as UV resistant. The color of polymers exposed to UV radiation (sunlight, UV-C lamps etc.) will fade over time.

POM (Polyoxymethylene/Polyacetal)
- very dimensionally stable
- very strong and stiff
- high chemical resistance to organic solvents
- lower coefficient of friction
- very durable material
- hard, incision-resistant surface
- temperature range –45 to +90 °C (–49 to 194 °F)
- FDA/EU approved for direct food contact
- good UV-A/UV-B/UV-C resistance*

POM-CR (POM cut resistant)
- modified POM
- impact resistant, highly resistant to incisions
- minimal ridge formation
- low risk of material delamination
- temperature range –45 to +90 °C (–49 to 194 °F)
- FDA/EU approved for direct food contact
- good UV-A/UV-B/UV-C resistance*

POM-HC (POM highly conductive)
- modified POM
- highly conductive material
- surface resistivity < 10^6 Ω (according to ISO 21178)
- very good friction and abrasion properties
- very dimensionally stable
- very strong and stiff
- high chemical resistance to organic solvents
- very durable material
- hard, incision-resistant surface
- temperature range –45 to +90 °C (–49 to 194 °F)

POM-MD (POM metal detectable)
- modified POM
- material easily detected in metal detectors
- FDA/EU approved for direct food contact
- very dimensionally stable
- very strong and stiff
- high chemical resistance to organic solvents
- very durable material
- hard, incision-resistant surface
- temperature range –45 to +90 °C (–49 to 194 °F)

HW (POM highly wear resistant)
- modified POM
- highly wear resistant
- very dimensionally stable
- very strong and stiff
- high chemical resistance to organic solvents
- very durable material
- hard, incision-resistant surface
- temperature range –45 to +90 °C (–49 to 194 °F)

PP (Polypropylene)
- standard material for normal conveying applications
- quite strong and stiff
- highly resistant to acids, alkalis, salts, alcohols
- low specific weight
- temperature range +5 to +100 °C (41 to 212 °F)
- FDA/EU approved for direct food contact
- good UV-A/UV-B/UV-C resistance*

PP-MD (PP metal detectable)
- modified PP
- material easily detected in metal detectors
- quite strong and stiff
- highly resistant to acids, alkalis, salts, alcohols
- low specific weight
- temperature range +5 to +100 °C (41 to 212 °F)
- FDA/EU approved for direct food contact

PP-SW (steam and hot water resistant)
- modified PP
- improved resistance against oxidation and embrittlement
- quite strong and stiff
- highly resistant to acids, alkalis, salts, alcohols
- low specific weight
- temperature range +5 to +100 °C (41 to 212 °F)
- FDA/EU approved for direct food contact

2.1 PLASTIC MATERIALS (PROPERTIES)

PK (Wear and impact improved polymer)

- good wear resistance
- very good abrasive resistance
- good fatigue resistance
- suitable for dry, wet an submerged usage (less hygroscopic)
- highly impact resistant
- very good chemical resistance to acids and alkalis
- temperature range – 45 to + 120 °C (– 49 to 248 °F)
- short-term temperature resistance up to 150 °C (302 °F)
- FDA/EU approved for direct food contact

PLX (Special PK for pins with small diameter – higher stiffness)

- good wear resistance
- very good abrasive resistance
- good fatigue resistance
- suitable for dry, wet an submerged usage (less hygroscopic)
- highly impact resistant
- very good chemical resistance to acids and alkalis
- temperature range – 45 to + 120 °C (– 49 to 248 °F)
- short-term temperature resistance up to 150 °C (302 °F)
- FDA/EU approved for direct food contact

PXX-HC (PXX self-extinguishing, highly conductive)

- flame retardant in line with DIN EN 13501-1 C_{fl} -s1 and DIN 4102 (B1)
- surface resistivity < 10^6 Ω according to ISO 21178)
- especially for use in automotive industries
- temperature range + 5 to + 100 °C (41 to 212 °F)
- flame retardant according to UL94-V1
- quite strong and stiff
- highly resistant to acids, alkalis, salts, alcohols
- low specific weight

TPC1 (Thermoplastic Copolyester)

- material for sprockets and belts exposed to high impacts
- abrasion resistant
- wear resistant
- extremely impact resistant
- light or medium load
- low brittleness, highly ductile
- hardness 60 shore D
- temperature range – 25 to + 80 °C (– 13 to 176 °F)
- FDA/EU approved for direct food contact

Belt material orientation chart

Every material has a unique combination of strengths. The following table provides an overview of all Siegling Prolink materials and their properties rated from 1 (bad) to 10 (good).

	Belt pull capacity	Impact strength	Wear resistance (high value = low dusting)	High temperature	Low temperature	Price	Direct food contact	Submerged in water	Metal detectable	Antistatic	Flame retardant	Suitable for microwave applications
PA	8	4	8	8	6	7	Yes	No	No	No	Yes	No
PA-HT	7	6	9	9	5	6	Yes**	No	No	No	No	No
PE	2	8	2	3	9	9	Yes	Yes	No	No	No	Yes
PE-I	2	9	2	3	9	9	Yes	Yes	No	No	No	No
PE-MD	2	7	2	3	9	6	Yes	Yes	Yes	No	No	No
PK (PLX)	5	9	9	8	7	3	Yes	Yes	No	No	No	No
POM	8	4	7	6	7	7	Yes	Yes	No	No	No	No
POM-CR	8	6	7	6	7	7	Yes	Yes	No	No	No	No
POM-HC	7	3	7	6	7	4	No	Yes	No	Yes	No	No
POM-MD	7	3	7	6	7	2	Yes	Yes	Yes	No	No	No
PP	4	3	3	7	3	9	Yes	Yes	No	No	No	Yes
PP-MD	4	2	3	7	3	8	Yes	Yes	Yes	No	No	No
PP-SW	3	4	3	8	3	8	Yes	Yes	No	No	No	No
PXX-HC	4	3	3	7	3	4	No	Yes	No	Yes	Yes	No
TPC1	2	10	10*	5	5	2	Yes	Yes	No	No	No	No

* for applications in abrasive particles, ** only in BL (blue)

Use of materials

Application environment		**Belt modules**	**Pins**
General conveying	General conveyor (> 10 °C/> 50 °F)	PP	PP
	Aggressive chemicals (strong acid etc.)	PP	PP
	Impact and/or low temperature (<10 °C/<50 °F)	PE (PE-I)	PE
	High load	POM	PBT
Abrasive	Deboning and trimming	POM-CR	PBT
	Dip tank conveyor (PAA)	PK (PLX)	PK (PLX)
	Wet, light load (Temperature <50°C (122°F))	PP	PBT
	Wet, high load (Temperature <50°C (122°F))	POM	PBT
	Dry	POM	PBT
Increased temperature	Boiling and steaming, up to 100 °C (212 °F)	PP-SW	PP-SW
	Dry, high load up to 90 °C (194 °F)	POM	PBT
	Wet, high load up to 90 °C (194 °F)	POM	POM
	Dry up to 120 °C (248 °F), FDA/EU	PA	PBT
	Dry up to 155 °C (311 °F), not FDA/EU	PA-HT	PA-HT

2.1 PLASTIC MATERIALS (PROPERTIES)

Temperature ranges

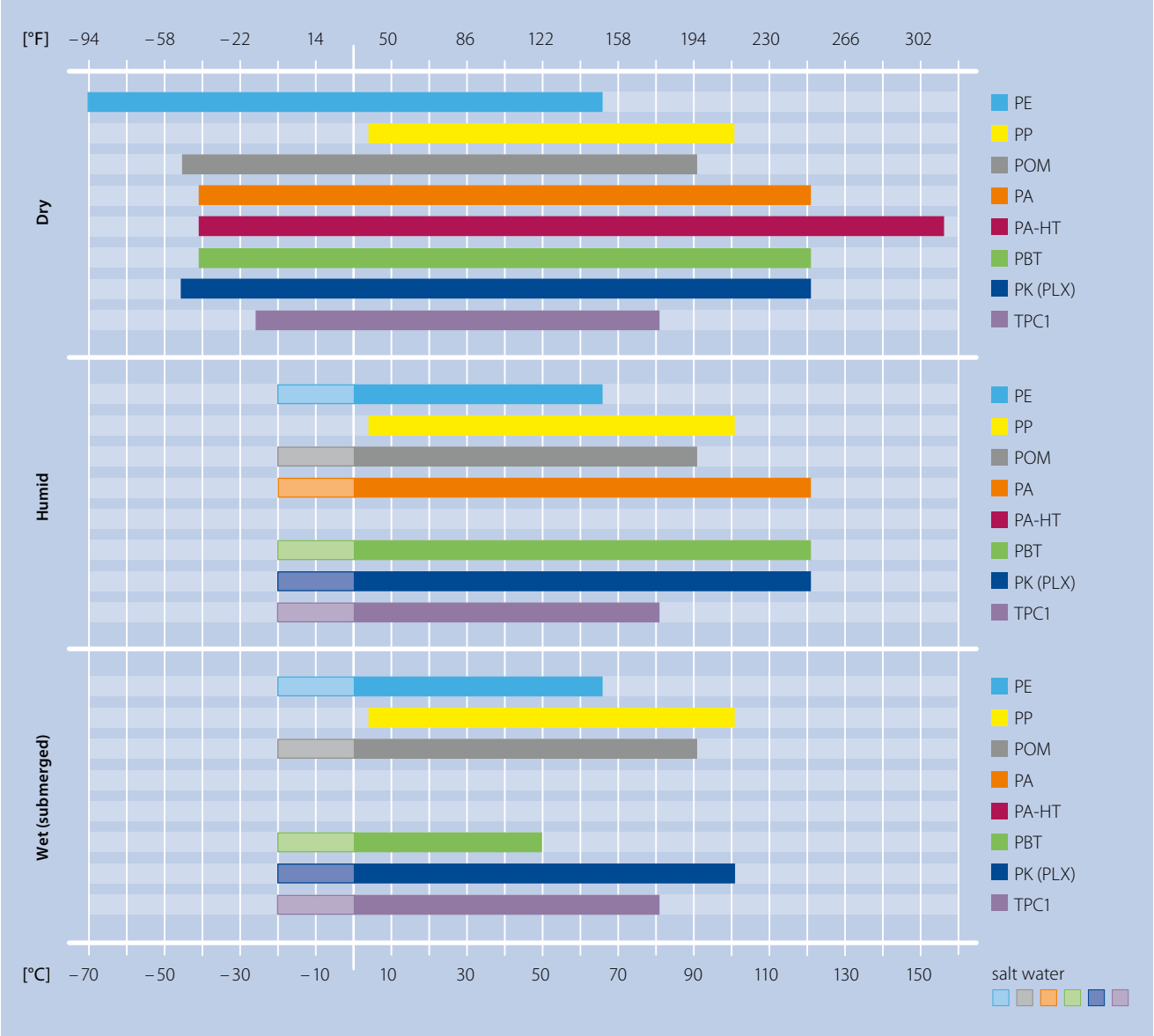

For the effect of temperature on belt measurement see chapter 3.

The following charts show the c_T factor for standard materials. This shows how the belt strength is affected by temperature.

PE (PE-I, PE-MD)

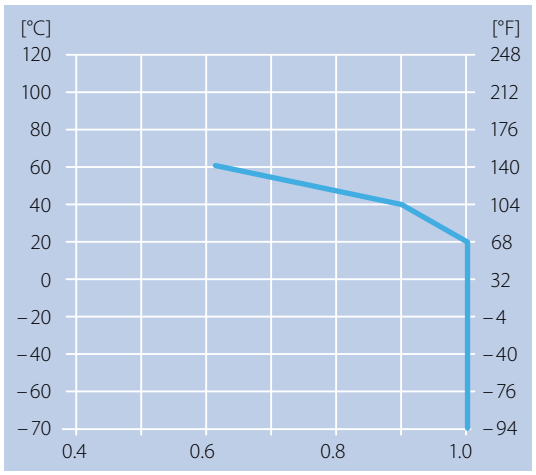

PP (PP-MD, PP-SW)

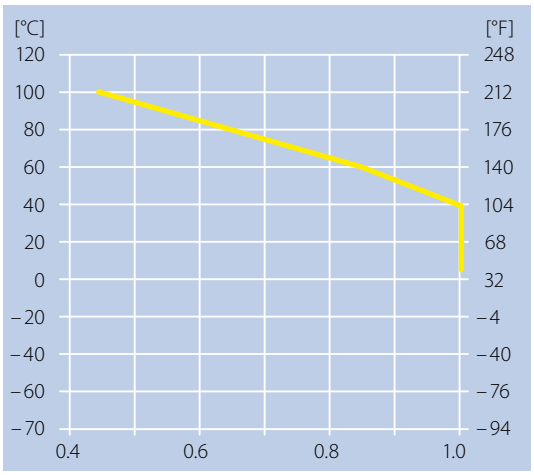

POM (POM-CR, POM-MD, POM-HC, POM-HW)

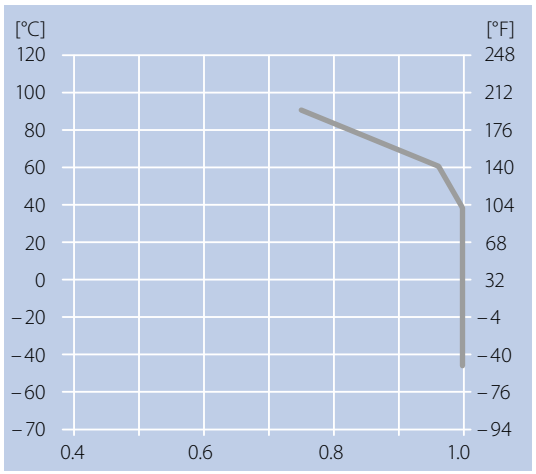

PA/PA-FR and PK (PLX)

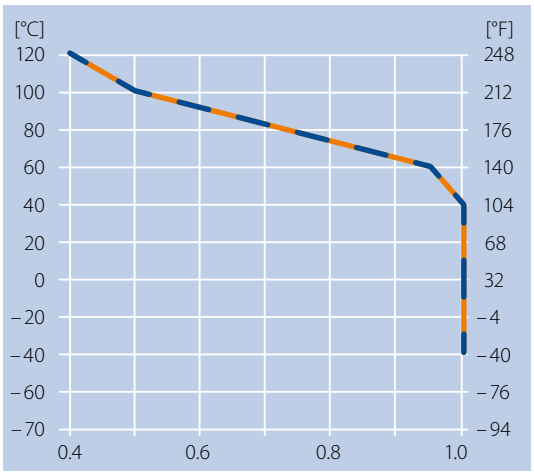

PA-HT

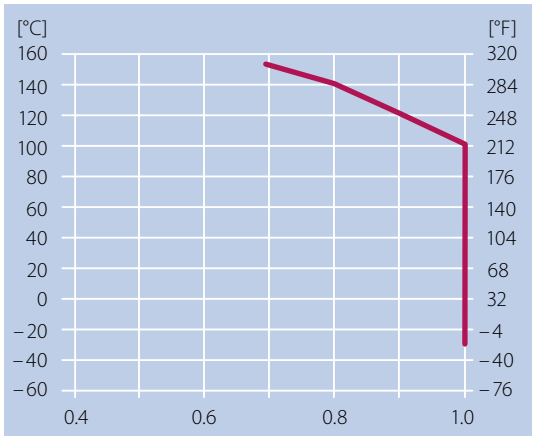

TPC1

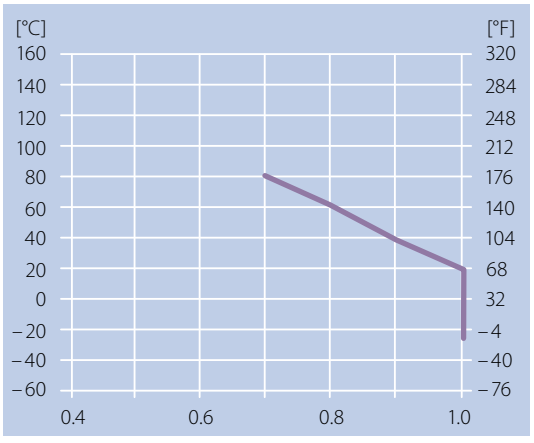

2.1 PLASTIC MATERIALS (PROPERTIES)

Color codes

Siegling Prolink materials come in a variety of colors. The table shows all available colors with the approx. RAL code. Please note that Siegling Prolink modules are not produced in every color listed. For standard material/color combinations see the Siegling Prolink series datasheet.

Color sample	Code	Name	Approx. RAL
	AT	anthracite	7021
	BL	blue	5015
	BG	beige	1015
	BK	black	9011
	DB	dark blue	5010
	GN	green	6035
	LB	light blue	5012
	LG	light gray	7001
	OR	orange	2004
	RE	red	3020
	TQ	turquoise	5018
	UC	uncolored	–
	WT	white	9010
	YL	yellow	1026

Friction factors

The dynamic coefficients of friction μ_S between belt and wearstrip are shown below.
The figures stated have been established under ideal conditions. When operating under other conditions we recommend assuming higher friction coefficients. ("–" = combination not recommended, empty cell = combination not tested)

Wearstrip material	Operating conditions	Belt material																					
		PA			PA-HT			PE & PE-MD			POM incl. CR, HC & MD			PP, PP-MD & PXX-HC			PK (PLX)			TPC1		
		clean	regular	soiled	clean	regular	soiled	clean	regular	soiled	clean	regular	soiled	clean	regular	soiled	clean	regular	soiled	clean	regular	soiled
Hardwood	dry	0.18	0.19	0.29	0.14	0.14	0.14	0.16	0.16	0.24	0.16	0.22	0.32	0.22	0.39	0.59						
	wet	–	–	–	–	–	–	–	–	–	–	–	–	–	–	–						
PE-HMW	dry	0.15	0.23	0.34	0.12	0.2	0.31	–	–	–	0.08	0.19	0.29	0.14	0.19	0.29						
	wet	–	–	–	–	–	–	–	–	–	0.08	0.12	0.25	0.12	0.17	0.26						
Lubricated PA	dry	0.16	0.24	0.36	0.14	0.22	0.32	0.18	0.28	0.45	0.12	0.20	0.30	0.13	0.24	0.35						
	wet	–	–	–	–	–	–	–	–	–	–	–	–	–	–	–						
Steel	dry	0.20	0.31	0.45	0.19	0.25	0.38	0.14	0.23	0.38	0.18	0.23	0.35	0.25	0.31	0.47	0.24	0.28	0.32	0.40	0.46	0.61
	wet	–	–	–	–	–	–	0.13	0.21	0.33	0.14	0.17	0.26	0.24	0.29	0.44	0.21	0.26	0.30	0.38	0.44	0.59
UHMW PE	dry	0.18	0.24	0.38	0.15	0.19	0.35	0.30	0.31	0.47	0.13	0.17	0.32	0.13	0.22	0.35	0.21	0.25	0.29	0.43	0.49	0.65
	wet	–	–	–	–	–	–	0.27	0.28	0.45	0.11	0.15	0.28	0.11	0.20	0.32	0.10	0.18	0.23	0.39	0.46	0.62

Dynamic coefficients of friction μ_{acc} between belt and conveyed product.
("–" = combination not recommended, empty cell = combination not tested)

Conveyed product	Operating conditions	Belt material																					
		PA			PA-HT			PE & PE-MD			POM incl. CR, HC & MD			PP, PP-MD & PXX-HC			TPC1					
		clean	regular	soiled	clean	regular	soiled	clean	regular	soiled	clean	regular	soiled	clean	regular	soiled	clean	regular	soiled	clean	regular	soiled	
Cardboard	dry	0.14	0.30	0.5	0.20	0.30	0.50	0.15	0.19	0.34	0.20	0.30	0.50	0.22	0.31	0.55							
	wet	–	–	–	–	–	–	–	–	–	–	–	–	–	–	–							
Glass	dry	0.13	0.20	0.33	0.13	0.20	0.33	0.10	0.15	0.25	0.13	0.20	0.35	0.16	0.24	0.41							
	wet	–	–	–	–	–	–	0.09	0.13	0.22	0.13	0.18	0.33	017	0.21	0.37							
Metal	dry	0.18	0.28	0.46	0.20	0.30	0.50	0.13	0.2	0.33	0.17	0.27	0.45	0.32	0.48	0.6	0.42	0.48	0.63				
	wet	–	–	–	–	–	–	0.11	0.17	0.28	0.16	0.25	0.42	0.29	0.45	0.58	0.40	0.46	0.61				
Plastic	dry	0.13	0.20	0.31	0.13	0.20	0.33	0.10	0.13	0.25	0.15	0.25	0.41	0.15	0.21	0.37	0.45	0.51	0.67				
	wet	–	–	–	–	–	–	0.08	0.11	0.22	0.14	0.21	0.36	0.14	0.19	0.34	0.41	0.47	0.63				

2.1 PLASTIC MATERIALS (PROPERTIES)

Declaration of compliance

FDA/EU

Siegling Prolink modular belts made of the following materials are proven to comply with FDA 21 CFR as well as the (EU) 10/2011 and (EC) 1935/2004 regulations regarding the raw materials used and the migration thresholds:

	BL	BG	BK	DB	LB	LG	OR	UC	WT
PA	●					●			
PA-HT	●								
PBT	●				●			●	
PE	●		●	●	●	●	●	●	●
PE-I								●	
PE-MD	●								
PK (PLX)	●							●	
POM	●			●	●	●	●	●	●
POM-CR	●			●	●	●	●	●	●
POM-MD	●								
PP	●			●	●	●	●	●	●
PP-MD	●								
PP-SW	●				●				●
TPC1					●			●	●
TPE R7*	●	●	●						
TPE R8*		●							

* Do not use in direct contact with fatty foods

MHLW

Siegling Prolink modular belts made of the following materials comply with Japanese Food Regulation (Ministry of Health and Welfare #370).

	BL	BG	BK	DB	LB	LG	OR	UC	WT
PA	●					●			
PA-HT	●								
PBT	●				●			●	
PE	●		●	●	●	●		●	●
PE-I								●	
PE-MD	●								
PK (PLX)	●							●	
POM	●			●	●	●		●	●
POM-CR	●			●	●	●		●	●
POM-MD	●								
PP	●			●	●	●		●	●
PP-MD	●								
PP-SW	●				●				●
TPC1					●	●		●	●

Halal

All Siegling POM Prolink modular belts are certified as being compliant with Halal regulations by IFRC Asia (member of the World Halal Council).

Siegling Prolink material identification test

The following tests are useful in identifying the type of plastic used for a plastic modular belt.

The easiest and safest way to identify a material is to perform a "water test". Place a module in water and check whether the module sinks or floats.

Furthermore, you can perform a "burning test". Ignite a small piece of the plastic you want to identify and carefully observe the behavior of the flame. Check the flame color, the smoke development and the dripping characteristics of the melting plastic. Blow out the flame and check the odor.

Check the results of the tests with the table:

Plastic	Water test	Burning	Odor after extinguishing the flame
PA	Sinks	Blue flame Yellow top Melts and drips	Burnt wool, horn or hair
PBT	Sinks	Yellow flame Smoke Drips	Sweet Characteristically*
PE	Floats	Blue flame Yellow top Drippings may burn	Paraffin (like a blown out candle)
POM	Sinks	Invisible (light blue) flame No smoke Drippings may burn	Formaldehyde!
PP	Floats	Blue flame Yellow top Swells and drips	Sweet and like burning oil
PK (PLX)	Sinks	Blue flame Yellow top Drippings may burn	Unique smell

* Odors are difficult to describe, but are recognizable – use controls (known samples)

Always test only a single small module. Never ignite a whole belt! When performing a burning test, always have a bucket of water to hand. Immerse the module in water after the test to extinguish the flame (POM burns with an almost invisible flame).



FIRE WARNING for Siegling Prolink plastic modular belts

Siegling Prolink belts are made of various high-quality plastic materials that can burn. If ignited, products made from POM material will emit toxic fumes. During operation, storage and installation NEVER expose Siegling Prolink belts to an ignition source, such as flames, sparks, burning or very hot objects, or excessive heat. Special care should be taken when undertaking repair work, particularly when welding on or near a conveyor if the conveyor is equipped with a Siegling Prolink plastic modular belt.

Hazards from burning Siegling Prolink belts vary depending on material composition and environmental conditions such as temperature and oxygen availability. Hazards may include dense smoke, toxic gases or fumes, a flame that is difficult to detect, and fire spreading due to movement of the burning belt and/or dripping, burning, molten plastic.

Suitable fire extinguishing media include: water spray, foam, and dry chemical.



2.1 PLASTIC MATERIALS (PROPERTIES)

Cleaning agent compatibility

To check the chemical compatibility of a given cleaning solution, contact your supplier. It is important to mention the belt material(s) that will be in contact with the cleaning solution.

Please note the cleaning instructions in section 5.6.

Chemical resistance

Chemical resistance information is based on details provided by our raw material producers and suppliers.
We recommend that each customer check the resistances to account for the actual on-site conditions and the media that affects the belt. The properties of our rubber topped modules can be different from those in the body of the module.
If requested, we can supply appropriate samples.

The chemical compatibility charts below uses standard terms and generally known names.

Substance categories

	Polyamide (PA)	Polybutylene terephthalate (PBT)	Polyethylene (PE)	Polyacetal (POM)	Polypropylene (PP)	PK (PLX)
Acids weak	–	❍	●	❍	●	●
Acids strong	–	–	❍	–	●	–
Aldehydes	❍		❍	❍	●	●
Aliphatic HCs	●	●	●	●	●	●
Alcohols	●	●	●	●	●	●
Amines	●	–	●	❍	●	–
Aromatic HCs	●	❍	❍	❍	❍	●
Chlorinated HCs	❍	❍	❍	●	–	●
Ether	●	●	❍	●	–	●
Ester	●	❍	●	–	❍	●
Fuels	●	●	❍	●	❍	❍
Greases, oils	●	●	●	●	●	●
Hydrofluoric acid	–	●	❍	–	❍	–
Halogens dry	–		–	–	❍	
Inorganic salt solutions	●	●	●	●	●	❍
Ketones	●	–	●	❍	❍	●
Lyes weak	●	●	●	●	●	●
Lyes strong	❍	●	●	●	●	❍
Organic acids	❍	❍	●	●	❍	❍
Oxidizing acids	–	❍	–	–	–	❍
Petroleum	●	●	●	●	●	❍
Turpentine	❍	❍	–	●	–	
Unsaturated chlorinated HCs	❍	❍	–	●	–	❍
Water cold	●	●	●	●	●	●
Water hot	❍	–	●	●	●	●

● = Good resistance | ❍ = Limited resistance | – = No resistance | Empty cells = No test data available

Individual substances/chemicals

	Polyamide (PA)		Polyethylene (PE)		Polyacetal (POM)		Polypropylene (PP)	
	20 °C 70 °F	60 °C 140 °F	20 °C 70 °F	60 °C 140 °F	20 °C 70 °F	60 °C 140 °F	20 °C 70 °F	60 °C 140 °F
Acetic Acid > 5 %	–	–	●	❍	❍	–	●	●
Acetic Acid (5 %)	❍	–	●	●	●		●	●
Acetone	●	●	●	●	❍	❍	●	●
Alcohol (all types)	●	●	●	●	●	❍	●	●
Aluminum Comp.	●	●	●	●			●	●
Ammonia	●	●	●	●	●	●	●	●
Ammonium Comp.	●	●	●	●			●	●
Aniline			●	–		❍	●	●
Aqua Regia	–	–	❍	–			–	–
Arsenic Acid			●	●			●	●
Barium Comp.	●	●	●	●			●	●
Base (10 %)			●	●	●	●	●	●
Beer			●	●	●		●	●
Benzene	●	●	❍	–	❍	❍	❍	–
Benzenesulfonic Acid (10 %)			●	●			●	●
Benzoic Acid	❍	❍	●	●			●	●
Beverages (soft drinks)	●	●	●	●	●	●	●	●
Borax			●	●			●	●
Boric Acid	●	●	●	●			●	●
Butyl Acrylate			●	❍			–	–
Butyric Acid	●	●	●	❍			●	
Carbon Dioxide	●	●	●	●			●	●
Carbon Disulfide	●	●	❍	–			❍	–
Carbon Tetrachloride	●	●	❍	–	●	❍	❍	–
Chloracetic Acid	–	–					●	●
Chlorine (Gas)	–	–	❍	–	–	–	–	–
Chlorine (Liquid)	–	–	–	–	–	–	–	–
Chlorine Water (0.4 % Cl)	–	–	❍	❍	–	–	❍	❍
Chlorobenzene	●	●	❍	–	❍	❍	–	–
Chloroform	❍		–	–	–	–	–	–
Chromic Acid (50 %)	❍		●	❍	–	–	●	●
Chromic Acid (3 %)			●	●	❍	❍	●	●
Citric Acid (40 %)	●	●	●	●	●		●	●
Citric Acid (10 %)	●		●	●	●	●	●	●
Citrus Juices	❍		●	●			●	●
Coconut Oil	●		●	●	●	●	●	●
Copper Comp.	●		●	●	●	●	●	●
Corn Oil	–	–	●	❍			●	●
Cottonseed Oil	●		–	–			●	❍
Cresol	●		❍	–			●	❍
Cyclohexane	●		–	–			●	❍
Cyclohexanol	●		●	●	●	●	●	●
Cyclohexanone			●	●			●	●

● = Good resistance | ❍ = Limited resistance | – = No resistance | Empty cells = No test data available

2.1 PLASTIC MATERIALS (PROPERTIES)

	Polyamide (PA)		Polyethylene (PE)		Polyacetal (POM)		Polypropylene (PP)	
	20 °C 70 °F	60 °C 140 °F	20 °C 70 °F	60 °C 140 °F	20 °C 70 °F	60 °C 140 °F	20 °C 70 °F	60 °C 140 °F
Detergents	●	●					●	❍
Dextrin	●	●	–	–	❍	❍	–	–
Dibutyl Phthalate				–			●	●
Diethyl Ether			●	●			●	●
Diethylamine							●	●
Diglycolic Acid (30 %)							●	●
Diisooctyl Phthalate	●	●					●	
Dimethyl Phthalate	●	●					●	❍
Dimethylamine	●	●	❍	❍	❍	–	●	●
Dioctyl Phthalate							❍	❍
Ethyl Acetate							●	●
Ethyl Ether	●	❍	●	●	●	❍	●	●
Ethylamine			●	●	❍	–	●	●
Ethylene Glycol (50 %)			●	❍	●	●	●	●
FerricFerrous Comp.	❍	–	●	●			●	❍
Formaldehyde (37 %)			●	●	❍	❍		
Formic Acid (85 %)	●	●	●	–	❍	❍	●	❍
Freon	●		●	●	●		●	●
Fuel (Oil)	●		❍	–			❍	❍
Fruit Juices	●	●	●	–	●	●	❍	–
Furfural			●	●	●	●	●	●
Gasoline	●	●					●	●
Glucose	●	●	❍	–	●	●	–	–
Glycerol	●	●	–	–	●		●	❍
Heptane	–	–	●	●			●	●
Hexane	●	●	●	●	●		●	●
Hydrobromic Acid (50 %)	●		●	●	●	●	●	●
Hydrochloric Acid (35 %)	–	–	●	●	–	–	●	●
Hydrochloric Acid (10 %)	–	–	●	●	–	–	●	●
Hydrofluoric Acid (35 %)	–	–	●	●	–	–	●	●
Hydrogen Peroxide (3 %)	❍	❍	●	●	●	●	●	●
Hydrogen Peroxide (90 %)	–	–	●	❍	❍	–	❍	❍
Hydrogen Sulfide	●	●	●	●			●	●
Igepal (50 %)					●	❍	●	●
Iodine (Crystals)	–	–	❍	❍	–	–	●	●
Isooctane	●	●	●				–	–
Isopropyl Alcohol	●	●	●	●	●	●	●	●
Jet Fuel	●	●	❍	❍	●	●	❍	–
Kerosene			❍	❍	●	●	❍	–
Lactic Acid	❍	–	●	●			●	●
Lanolin			●	●			●	❍
Lauric Acid			●	●			●	●
Lead Acetate	●	●	●	●			●	●
Linseed Oil	●	●	●	●	●	●	●	●
Lubricating Oil	●	❍			●	●	●	❍

● = Good resistance | ❍ = Limited resistance | – = No resistance | Empty cells = No test data available

	Polyamide (PA)		Polyethylene (PE)		Polyacetal (POM)		Polypropylene (PP)	
	20 °C 70 °F	60 °C 140 °F	20 °C 70 °F	60 °C 140 °F	20 °C 70 °F	60 °C 140 °F	20 °C 70 °F	60 °C 140 °F
Magnesium Comp.	●		●	●			●	●
Malic Acid (50 %)	●	●	●	●			●	●
Manganese Sulfate	❍	❍	●	●			●	
Margarine			●	●			●	●
Mercury	●		●	●			●	●
Methyl Chloride	●	●					❍	❍
Methyl Ethyl Ketone	●		–	–	❍	❍	●	❍
Methyl Isobut. Ketone							●	❍
Methylsulfuric Acid			●	●			●	●
Methylene Chloride	❍	❍	–	–			❍	–
Milk	●	●	●	●	●	●	●	●
Mineral Oil	●		●	❍	●	●	❍	–
Mineral Spirit (White Spirit)							❍	–
Molasses	●	●	●	●			●	●
Motor Oil	●	●			●	●	●	❍
Naphtha	●	●	❍	–			●	❍
Nitric Acid (30 %)	–	–	●	●	–	–	●	❍
Nitric Acid (50 %)	–	–	●	❍	–	–	❍	–
Nitrobenzene	❍		–	–			●	❍
Nitrous Acid							●	
Nitrous Oxide							●	
Oleic Acid	●	●			●	●	●	–
Olive Oil			●	●			●	●
Oxalic Acid			●	●			●	●
Ozone	❍	❍	❍	–	–	–	❍	❍
Palmitic Acid (70 %)	●		●	●			●	●
Paraffin	●	●	●	●	●	●	●	●
Peanut Oil	●						●	●
Perchloric Acid (20 %)			●	●			●	●
Perchlorothylene	❍	–	–	–			–	–
Phthalic Acid (50 %)			●	●			●	●
Phenol	–	–	●	●	–	–	●	●
Phenol (5 %)	–	–	●	●	–	–	●	●
Phosphoric Acid (30 %)	–	–	●	●	❍	–	●	●
Phosphoric Acid (85 %)	–	–	●	●	–	–	●	●
Photographic Solutions	●		●	●			●	●
Plating Solutions			●	●			●	●
Potassium Comp.	❍		●	●	●	●	●	●
Potassium Hydroxide	❍		●	●	●	●	●	●
Potassium Iodide (3 % Iodine)			●	●			●	●
Potassium Permanganate	–	–	●	●			●	❍

● = Good resistance | ❍ = Limited resistance | – = No resistance | Empty cells = No test data available

2.1 PLASTIC MATERIALS (PROPERTIES)

	Polyamide (PA)		Polyethylene (PE)		Polyacetal (POM)		Polypropylene (PP)	
	20 °C 70 °F	60 °C 140 °F	20 °C 70 °F	60 °C 140 °F	20 °C 70 °F	60 °C 140 °F	20 °C 70 °F	60 °C 140 °F
Silver Cyanide							●	●
Silver Nitrate			●	●			●	●
Sodium Comp.			●	●			●	●
Sodium Chloride	–	–	●	●			●	❍
Sodium Hydroxide	–	–	●	●	●	●	●	●
Sodium Hydroxide (60 %)	–	–	●	●	●	●	●	●
Sodium Hypochlorite (5 % Cl)	❍		●	❍	–	–	●	❍
Stearic Acid	●	●	●	●	❍		●	❍
Sulfamic Acid (20 %)					–	–	●	●
Sulfate Liquors							●	●
Sulfur	●	●	●	●			●	●
Sulfur Chloride							●	
Sulfur Dioxide	❍	❍	●	●	–	–	●	●
Sulfuric Acid (10 %)	–	–	●	●	●	–	●	●
Sulfuric Acid (50 %)	–	–	●	●	–	–	●	●
Sulfuric Acid (70 %)	–	–	●	❍	–	–	●	❍
Sulfurous Acid	❍	❍	●	●			●	
Tannic Acid (10 %)			●	●			●	●
Tartaric Acid	●	❍	●	●			●	●
Tetrahydrofuran	●				❍	❍	❍	–
Toluene	●	●	–	–	❍	–	–	–
Transformer Oil	●	●	●	❍			●	❍
Tributyl Phosphate							●	❍
Trichloroacetic Acid	–	–	❍				●	●
Trichloroethylene	❍	–	–	–	❍	❍	–	–
Tricresyl Phosphate							●	❍
Trisodium Phosphate			●	●			●	●
Turpentine	●	●	●	–	●		❍	–
Urea	●	●	●	●			●	●
Vinegar	●	●	●	●	●	●	●	●
Wine	●	●	●	●	●	●	●	●
Xylene	●	●	–	–	●	●	–	–

● = Good resistance | ❍ = Limited resistance | – = No resistance | Empty cells = No test data available

2.2 OTHER MATERIALS

High-grip materials

Following materials are used for our friction top modules

Material		Color	Hardness	Temp. range		Approved for food contact*		Bonding
Code	Type			°C	°F	FDA	EU 1935	
R2	EPDM	BK	80 Shore A	–70/100	–94/212	No	No	Mechanical
R3	TPE	BL, TQ	70 Shore A	–45/65	–49/149	No	No	Mechanically on POM
R4	TPE	BG	86 Shore A	+5/100	+41/212	Yes	Yes	Chemically on PP
R5	TPE	UC	52 Shore A	+5/100	+41/212	Yes	Yes	Chemically on PP
R6	TPE	BK, BL	63 Shore A	–45/60	–49/194	No	No	Chemically on POM**
R7	TPE	BK, BG, BL	50 Shore A	+5/100	+41/212	Yes	Yes	Chemically on PP
R8	TPE	BG	55 Shore A	–70/65	–94/149	Yes	Yes	Chemically on PE
R11	TPE	AT	50 Shore A	–45/65	–49/149	Yes	Yes	Mechanically on POM

* Raw material comply with FDA 21 CFR as well as the EU 10/2011 and EC 1935/2004 regulations. Do not use in direct contact with fatty foods
** Bonding to POM base module is not as strong as to PP

Shore hardness scale for High-grip materials

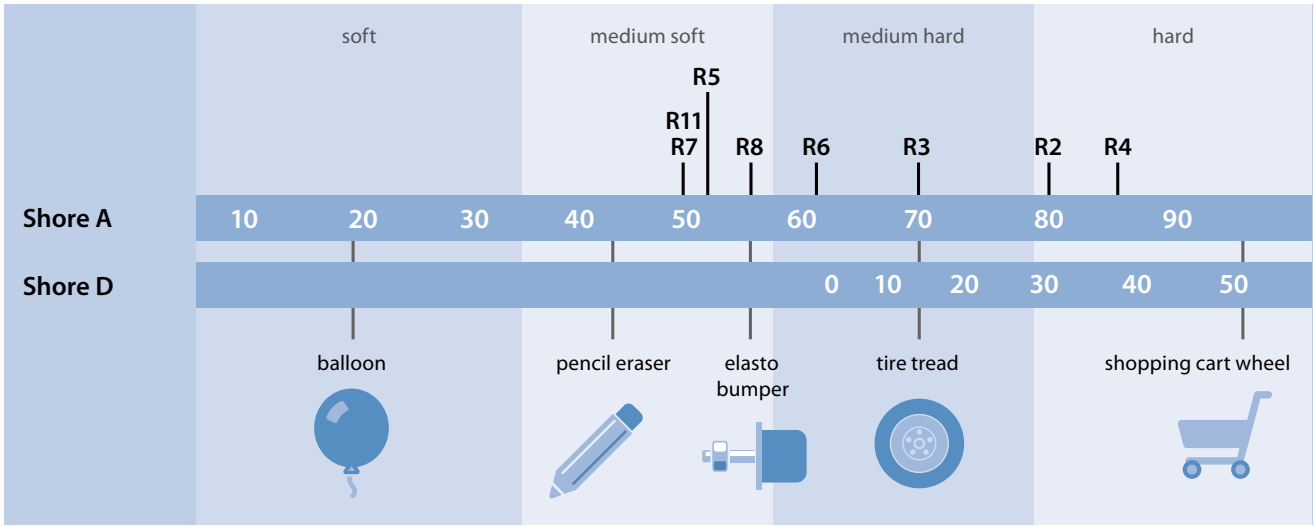

Metals

Material		AISI	Alloy type	Acid resistant	Temp. range		Approved for food contact		Magnetic
Code	No.				°C	°F	FDA	EU 1935	
CS	1.0570	ST52-3	carbon steel	–	–70/500	–95/930	No	No	Yes
ZN	1.0570	ST52-3	zinc-plated carbon steel	+	–70/500	–95/930	No	No	Yes
SS	1.4301	304	austenitic Cr-Ni stainless steel	++	–70/420	–95/790	Yes	Yes	No*
SSS	1.4404	316	austenitic Cr-Ni-Mo SS "Acid resistance"	+++	–70/420	–95/790	Yes	Yes	No*

* Processing/machining of these can result in a minor magnetic field.



3 ENGINEERING GUIDELINES

3.1 Basics

3.2 Conveyor design

3.3 Conveyor layouts

3.1 BASICS

Factors affecting belt life

The following figure show the qualitative effects on the lifetime of a modular belt.

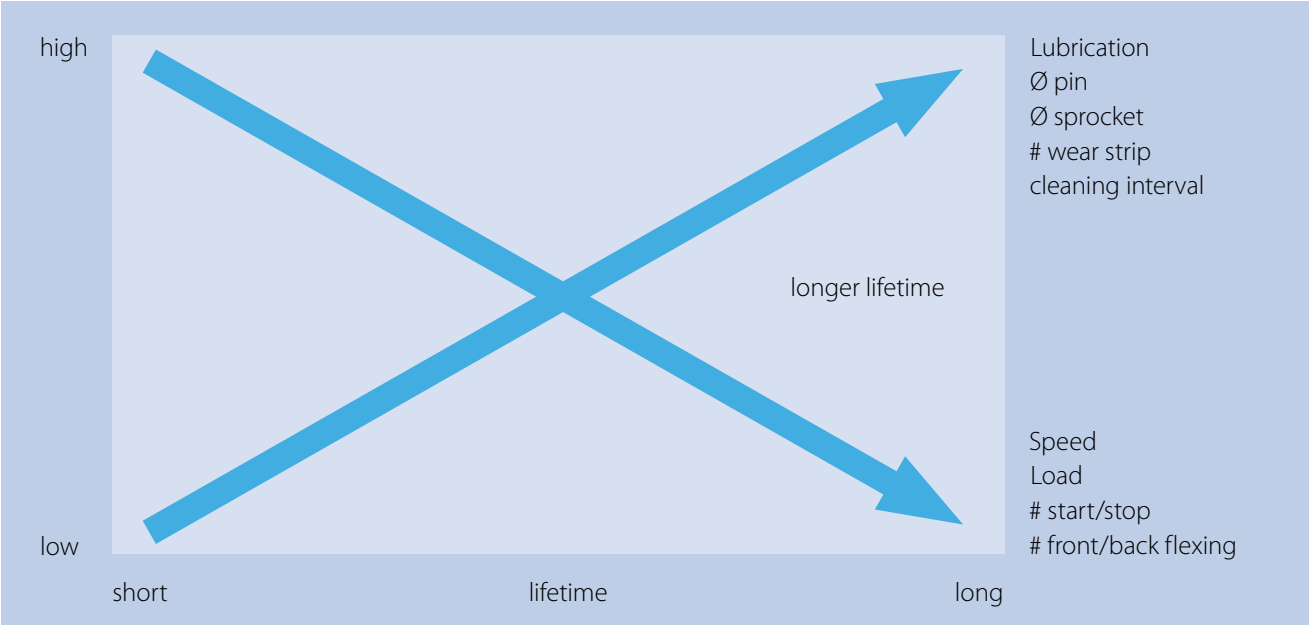

General conveyor considerations

Clearance
Always leave enough space between the belt, wearstrip, guiding, and other conveyor components to avoid excessive wear. Keep fabrication and temperature variation in mind when determining the dimensions.

(Wearstrip) Alignment
For long and worry-free operation, the alignment between the belt support and belt must be accurate. This will avoid unnecessary resistance, pinch points and excessive premature wear.

Speed
We recommend soft motor starts and stops from speeds faster than 20 m/min or utilizations of more than 70 %. Keep in mind that temperature increases with higher speed and ensure the wearstrips don't overheat under load at high speeds. Furthermore it is recommended to make use of soft motor starts if product stability is an important criterion.

Length
The maximum conveyor length is generally limited by the maximum belt strength, but it can also be limited by the effects of elastic pulsation. This effect may occur if the belt stretches under load and the stored spring force in the belt is strong enough to accelerate a part of the belt. This does not depend on belt width, but on the spring force constant of the belt and belt material. This is especially important to avoid where product stability or continuous movement (for worker belts) is key.

Among other things, the main factors are conveyor length, belt speed and product weight. Generally, the risk of pulsation decreases with higher speed and shorter conveyors, and increases the other way around. Other ways to maximize the allowable conveyor length are to reduce the friction between the belt and wearstrips or choose a rigid belt design with stiff material (e.g. POM).

Sprockets
We recommend an odd number of sprockets to always have a center sprocket. Only fix the center sprocket and allow the other sprockets to move laterally to cover the expansion of belt width with temperature.
For the Siegling Prolink Series 11 belt, please see our Series 11 guidelines for the recommended sprocket quantities, locations and sprocket locking system.

Expansion/Contraction with temperature
Plastics can expand or contract significantly when temperatures fluctuate. The construction or design engineer must make allowances for changes in belt lengths and widths if the operating temperature differs from the ambient temperature. This affects the belt sag on the returnway and the lateral clearance on the conveyor frame. Calculation formulas are given in chapter 4.4.

Basic terms and dimension definitions

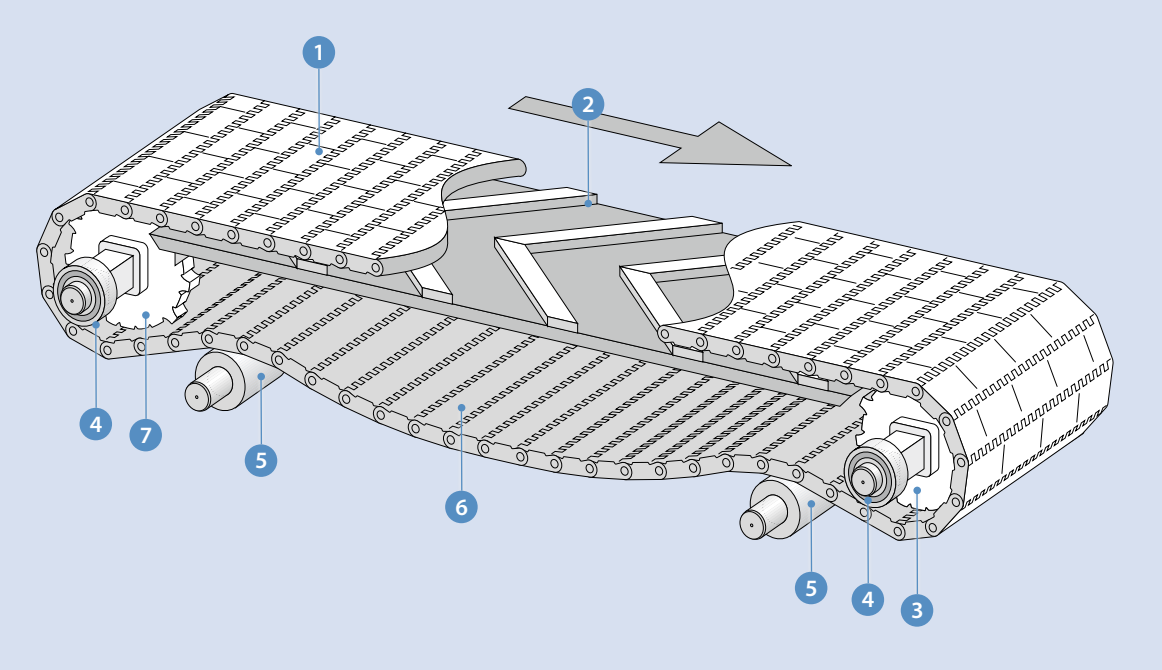

1. Siegling Prolink Modular Belt
2. Carryway with wearstrips
3. Drive sprocket/drive shaft
4. Bearing
5. Returnway roller
6. Catenary sag
7. Idle sprocket/idle shaft

3.2 CONVEYOR DESIGN

Shaft ❸ ❼

Shaft profile

In general, we recommend a square shaft. The main advantage of this design is that positive drive and tracking are possible without keys and keyways. This can save on manufacturing costs. In addition, this form facilitates the lateral movement of the sprockets in the event of temperature variations.

Occasionally round shafts with feather keys are also used for low-loaded, narrow belts. Specially designed sprockets with bore and keyway are available.

Alignment of shafts

Conveyor frame and shafts must be level. Furthermore the shafts need to be correctly placed in respect to each other, meaning a parallel alignment for straight conveyors and a perpendicular alignment for 90° side flexing conveyors. For straight conveyors, the shaft alignment can be checked with an easy procedure described as follows.

Measure the distance between the ends of the shafts diagonally according to the figure. If the distances are equal, the shafts are aligned. Ensure that the axis to axis distance has the correct value after the shafts are aligned.

If the distance between shafts is too long or the direct beeline is blocked you can measure the distance from shaft ends to a point A on an imaginary line drawn between the center of both axes of the shafts.

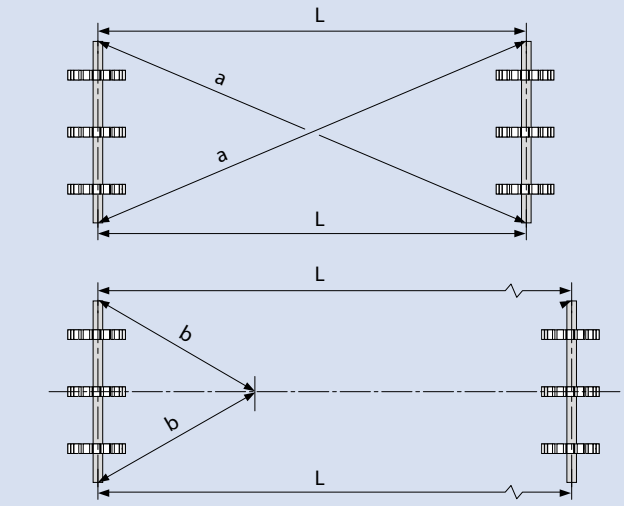

Shaft deflection

The drive shaft deflects because of the belt pull force acting on it. This effect increases with a greater bearing distance and smaller shafts.

The shaft deflection is to be kept down to minimize fatigue and to have a small and uniform transfer gap. We recommend keeping the deflection below 2 mm. If the belt pull force leads to a deflection of over 2 mm, choose a thicker shaft or, especially with conveyors with a wide belt width, install an intermediate bearing or split the shaft into sections.

The calculation formulas for deflection can be found in chapter 4.3. You can also use our Engineering program.

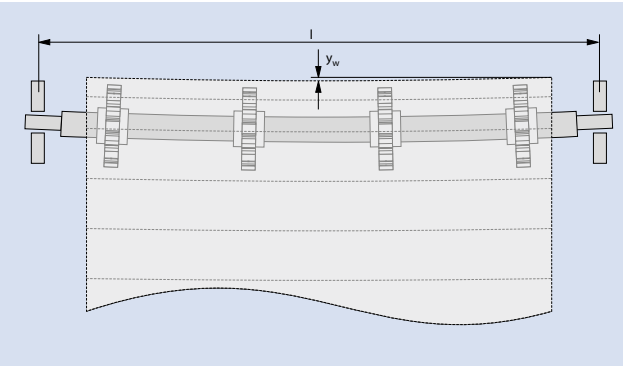

Shaft torsion
As a result of belt pull, the shaft will twist as a result of the torque from drive end to last sprocket. Therefore the torsion will increase with longer and thinner shafts, higher belt pull and bigger sprockets. If the twist is too high, the belt might come off the track or sprocket engagement will fail. We recommend not exceeding the torsion angle φ (phi) ≤ 0.5 ‰ per millimeter of shaft length.

Calculation formulas for shaft torsion can be found in chapter 4.3.

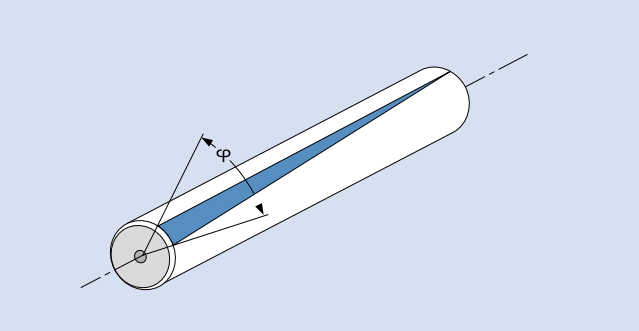

Drive configurations

Head drive
This configuration includes one motor on the conveyor head pulling the belt. We recommend having a contact arc of 180° to ensure proper engagement.

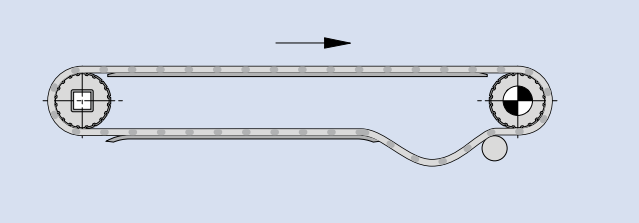

Lower head drive
This is a variant of the head drive where the drive shaft is moved down which allows for a small roller or nose bar to reduce the transfer gap to a minimum.

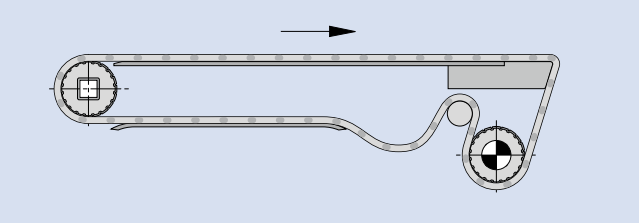

3.2 CONVEYOR DESIGN

Tail drive (Pusher configuration) and alternating tail-head drive configuration

Head-driven conveyors are considered the conventional configuration. It is only when the conveying direction is reversed that the conveyor become tail-driven and the drive unit has to push the belt and its load. If the tension on the returnway is not greater than on the upper side, the belt will jump sprockets.

An approximate value for the tension on the returnway is $1.2 \cdot F_u$ This automatically leads to a greater shaft load.

$F_s = 2.2 \cdot F_U$

When tensioning the belt, never exceed a belt elongation of more than 2 %. If the belt is tensioned correctly this drive configuration can work well, but keep in mind that due to higher tension the belt life will be reduced.

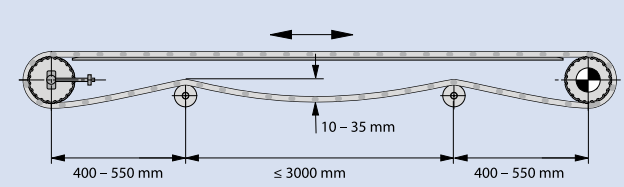

Two-motor design

Advantages: Low tension on the returnway, making smaller shaft loads possible and a longer belt life than a one-motor design for bi-directional conveyors.

Disadvantage: Increased costs due to additional motor and electronic control. For larger conveyors with relatively heavy loads, however, this system may still be the most reasonably priced.

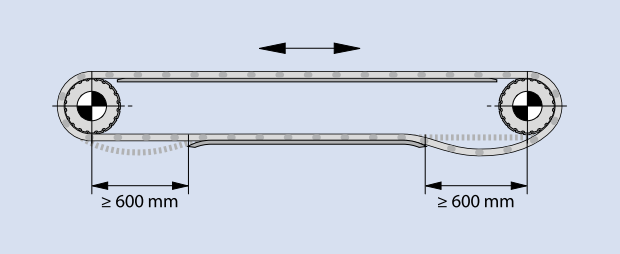

Center drive

For reversing operation, the drive shaft must be located as close to the middle as possible. To the right and the left of the drive unit, areas with belt sag must be provided, since these are necessary for the required belt tension the belt length between the load bearing rollers needs to be smaller than the distance from load bearing roller to next support roller. Otherwise there are weighted rollers necessary.

The 180° arc of contact on the drive shaft means belt and sprocket engage well which allows for ideal power transmission in both operational directions.

The location of the drive unit causes more stress on the shafts at the ends of the conveyor as there is effective pull on both the upper and returnway in the form of belt tension.

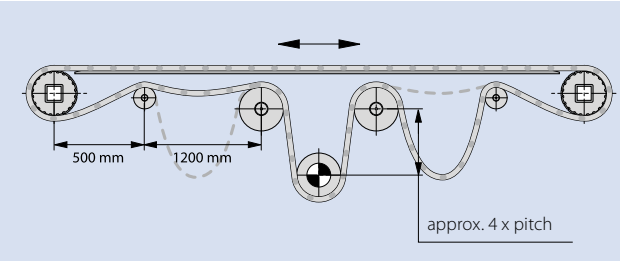

Catenary sag/control of belt length 6

There are various causes for changes in the belt length, e.g.

- elongation or contraction of the belt due to temperature variation
- wear of the connecting rods as well as enlargement of the connecting rod holes in the modules after a certain "break-in time" (enlargement of holes, 0.5 mm or larger holes in a 50 mm module results in an elongation of 1 %)

Therefore we recommend not supporting one (or several) sections on the returnway and using the resulting belt sag to compensate for the increase in length. It is important that perfect engagement between belt and sprocket is ensured. Please see the following examples:

a) Short conveyor (1)

b) Medium length conveyors, up to a center distance of approx. 4000 mm (2)

c) Long conveyors:
center distance > 20000 mm and low speeds
center distance < 15000 mm and high speeds (3)

Recommendation: Distance of support rollers not equidistant, to reduce a frequently stimulation.

Another effective method for compensating for belt elongation is a load-dependent take-up system (e.g. weighted roller).

This should be located as close to the drive shaft as possible since the take-up system will ensure even tension on the returnway and therefore perfect engagement between sprocket and belt (4).

It is recommended that the roller be guided sideways. Keep in mind that a weighted roller cannot be used when Hold Down Tabs or guided side modules are used.

The choice of weights for the take-up system depends on many factors.
In general, the take-up system should form the "excess" belt at "one" point of the returnway. The weight must therefore be selected accordingly. (If you have any questions, please contact our customer service)

Recommended diameters and weights for conveyor with a center distance up to 10 m (see chart):

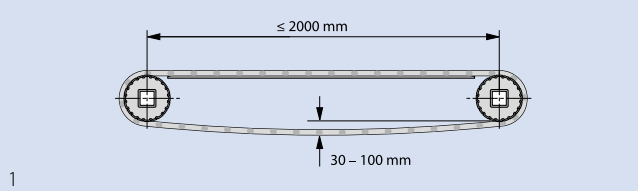

1

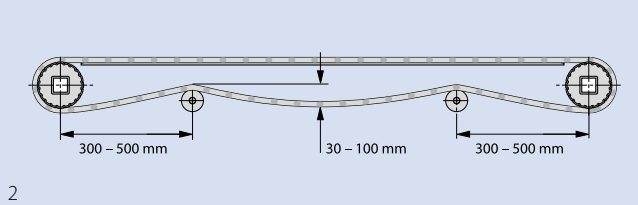

2

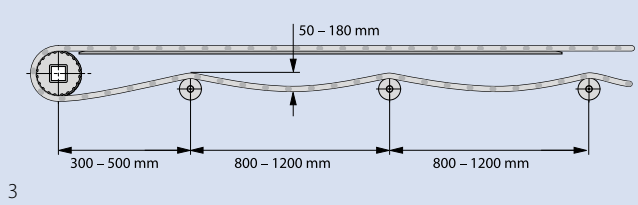

3

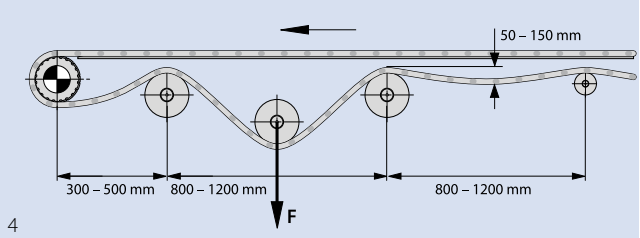

4

Series	Diameter [mm]	approx. weight per meter belt width [kg/m]
1, 3, 7	150	30
2, 4.1, 14, 15	100	15
6.1, 9	100	60
5, 8, 10, 11, 17, 18	100	30
13	50	10

Sprockets

Chordal action/Size of sprockets
What is known as chordal action is typical for all sprocket-driven belts, chains etc. The rise and fall of a module during the slewing motion cause changes in the linear speed of the belt. The number of teeth on the sprocket is the decisive factor for these periodic fluctuations in speed. See figure.

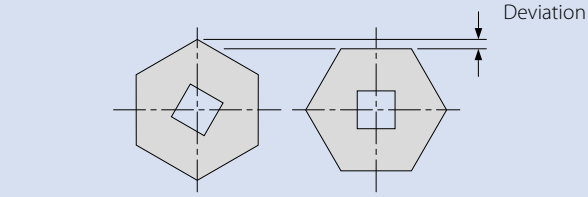

As the number of teeth increases, the percentage change in speed decreases. In practice this means that the largest number of teeth possible must be used if the goods are not to tip or if for other reasons a more consistent belt speed is required.

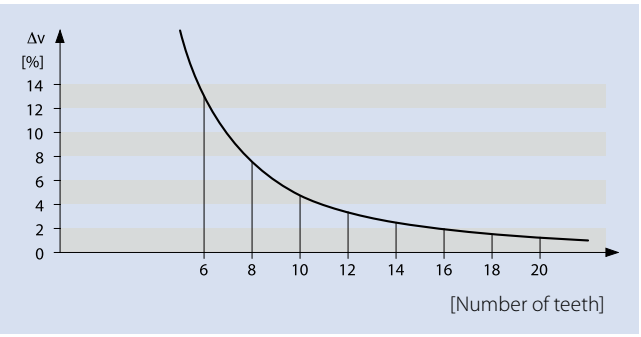

To determine the right number of teeth, keep in mind that with bigger sprockets the transmissible torque and shaft torsion increases. If the torsion is too great, the sprocket teeth and belt cannot engage properly, resulting in higher wear or damage to sprockets and belt. Furthermore it might lead to thicker shafts and more powerful motors, meaning higher costs.

Choose a sprocket size big enough to reduce the chordal action effect to the required degree, and small enough to reduce torsion and the motor power required to a reasonable level.

For correct shaft dimensioning see the calculations in chapter 4.3.

Snub Roller 5
Use a snub roller on the returnway to ensure an arc of contact of around 180°.
(This does not apply to conveyors with a center-to-center distance smaller than 2 m. Rollers on the returnway are not necessary here.)

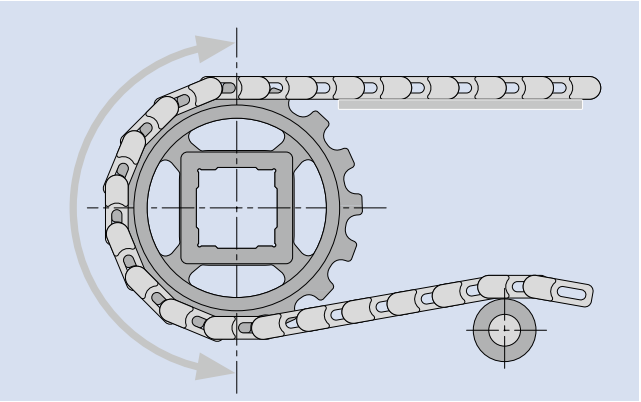

Sprocket position relative to wearstrips

If parallel wearstrips are used, we recommend placing them between the sprockets to ensure support until the sprocket takes over and minimize gap.

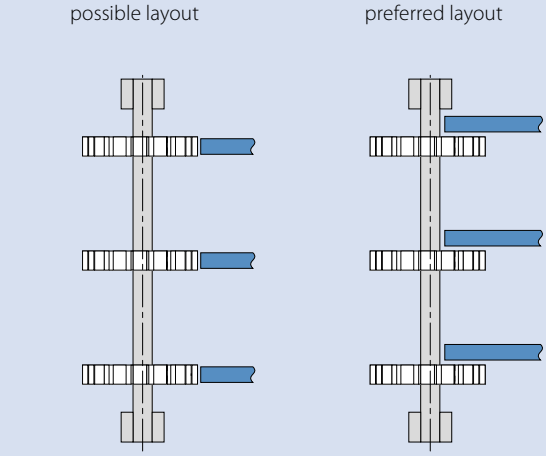

If wearstrips end at the sprocket edge, ensure a distance of $X \leq 1.5$ Pitch.

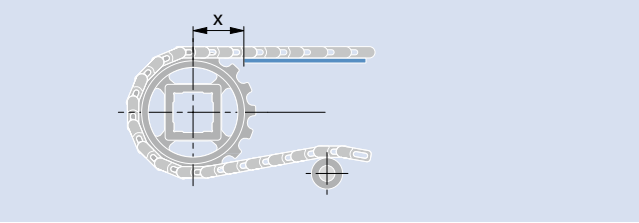

Number of sprockets

As a rule of thumb, sprocket spacing should not exceed 160 mm. By dividing the belt width by 150 mm, rounding the result up and adding 1 you get the minimum number of sprockets needed.

If you end up with an even number, we recommend adding another sprocket to achieve an odd number in order to have a true center sprocket. An exception can be made for narrow belts < 300 mm. Here only two sprockets are sufficient, but never install a belt with only a single sprocket.

The number of sprockets might need to be increased depending on the load: The number of drive sprockets required is calculated by the ratio between the adjusted and admissible belt pull. See Chapter 4 Calculations. Alternatively the Siegling Prolink Calculation Program calculates the number of sprockets required.

Ratio $\left[\frac{F_{adj}}{F_{adm}}\right]$	Maximum distance between* drive sprockets	drive split sprockets/ S17
≤ 20 %	160 mm (6.3 in)	135 mm (5.3 in)
≤ 40 %	100 mm (3.9 in)	80 mm (3.2 in)
≤ 60 %	80 mm (3.1 in)	65 mm (2.5 in)
≤ 80 %	60 mm (2.4 in)	50 mm (2 in)
> 80 %	please inquire	please inquire

* For Series 11 maximum distance should never exceed 75 mm.

3.2 CONVEYOR DESIGN

Sprocket fastening

Typically only one sprocket (as close to the center as possible) must be fastened axially on each idle or drive shaft. The design of this sprocket enables positive tracking of the belt. All other sprockets must to be allowed to move laterally on the shaft to move with the belt as its dimensions will change with temperature.

Examples of possible methods for fastening a sprocket are shown below:

For wide belts with retainer rings can also be installed at the bore ends to prevent sprockets from slipping off of the bore, but always leave enough space for sprockets to move on the bore with the belt due to temperature expansion.

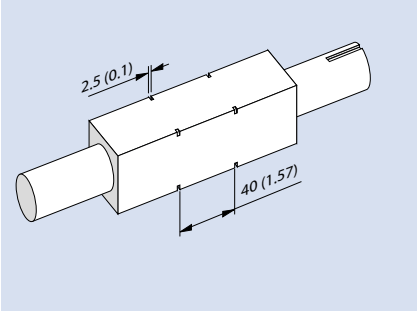

Shaft 40 x 40 mm. Fastening the sprocket with a retainer ring in accordance with DIN 471 (Seeger circlip ring), d = 56 mm. Detailed dimensions are to be found in appendix on page VI-13.

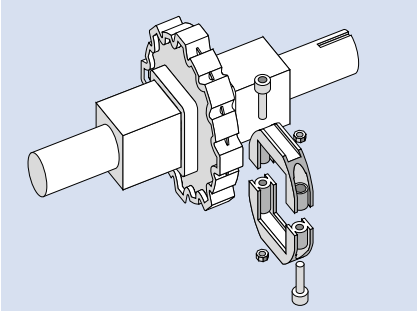

Siegling Prolink Retainer Rings provides a quick, easy and reliable solution for fixing the sprocket (see page I-230 for details).

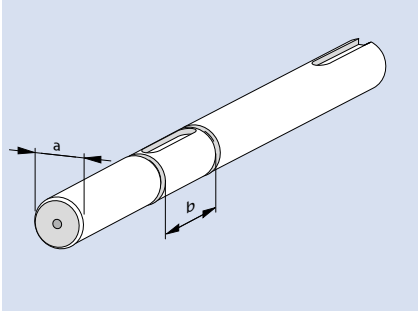

Fixation of the sprocket with retainer rings in accordance with DIN 471 (Seeger circlip ring).

Rollers as idle shaft

The idle shaft is usually equipped in the same fashion as the drive shaft. This allows lateral tracking on both ends of the conveyor. In special cases it might be necessary to replace the idle shaft with a roller, e.g. wide belts with high loads to avoid installation of intermediate bearings. If you take that approach, pay special attention to the lateral guiding. For example, edge wearstrips can be installed to guide the belt.

Carryway with wearstrip ❷

Standard plastic wearstrips are available from many plastic suppliers. The width should be approx. 30 – 40 mm, whereby the thickness depends on the height of the screw heads. We recommend using UHMW-PE or PE 1000 materials for the wearstrips. Alternatively, in some cases hardwood or steel can be used. For the optimal choice of wearstrip material, see the table below.

Running conditions	Wearstrip material	Temperature min	Temperature max
Low load and low speed	HMW-PE (PEHD500) Not recommended for any side-flexing conveyor where wearstrips are exposed to radial forces	– 70 °C (– 94 °F)	+ 65 °C (+ 149 °F)
High load and low speed	UHMW-PE (PEHD1000)	– 70 °C (– 94 °F)	+ 65 °C (+ 149 °F)
High load and high speed, dry	Nylatron NSM or comparable cast nylon 6 formulation containing solid lubricant additives (the use of oil impregnated wearstrips can result in unwanted clustering of dust on belt and wearstrip)	– 40 °C (– 40 °F)	+ 120 °C (+ 248 °F)
Wet, very abrasive or high temperature	Stainless steel (cold-rolled austenitic) (Softer annealed austenitic grades are **not** recommended)	– 70 °C (– 94 °F)	+ 155 °C (+ 311 °F)

If you are unsure please contact customer service.

Wearstrip arrangement
Continuous plate support made of steel or plastic.
We recommend this for conveyors with heavy loads.

Straight parallel wearstrips (1). This is an inexpensive solution for applications with minimal loads. The belt wear is limited to the areas where the wearstrips support the belt. We recommend a distance of approx. 100 – 150 mm between the wearstrips.

The belt is supported over the entire width by a V-shaped arrangement of the wearstrips (2). This spreads the wear and tear evenly and means heavy loads can be applied. Choose the angle and distance such that the Vs are overlapping and a support across the belt width with a distance of not more than 100 – 150 mm is maintained.

On the returnway, parallel wearstrips with a distance of approx. 200 mm are recommended. Alternatively, snub rollers can be used. Support is always provided in areas where no profiles, rollers, Friction Top Pattern etc. are fitted.

Rollers are not generally used to support the belt on the upper face. Unavoidable belt sag between the rollers as well as the chordal action of the drive unit (see page III-9) mean the goods are tipped which can cause problems.
Sometimes rollers are used for conveying bulk goods.

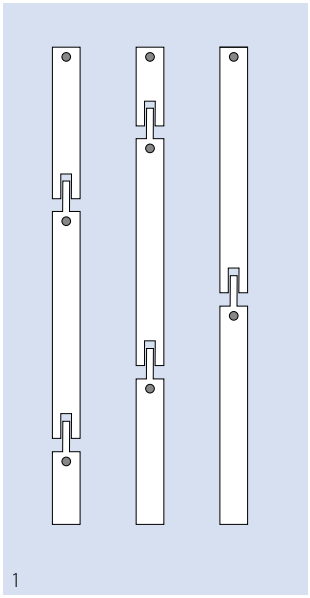
1

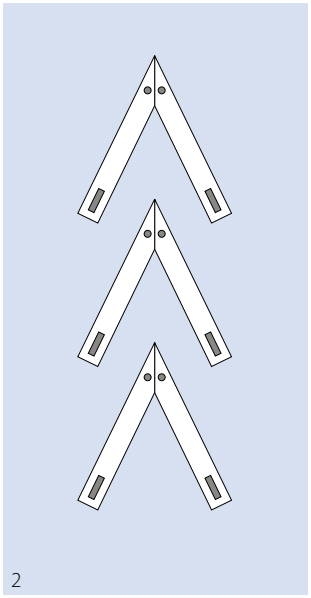
2

3.2 CONVEYOR DESIGN

Thermal expansion and contraction must be taken into consideration when mounting the support. These effects can be absorbed by slots and appropriate distancing between the wearstrips (see calculation in "Effect of temperature" in chapter 4.4). The admissible temperature ranges, as given by the manufacturer, must also correspond to the expected operating conditions.

If the belt is supported sideways, ensure that a minimum space of 0.2 % of the belt width but at least 2 mm is maintained at the highest operating temperature.

Carryway

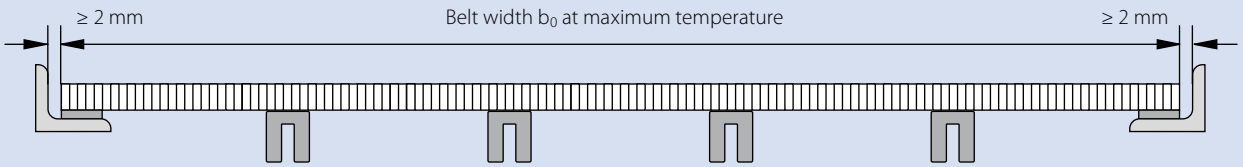

Returnway

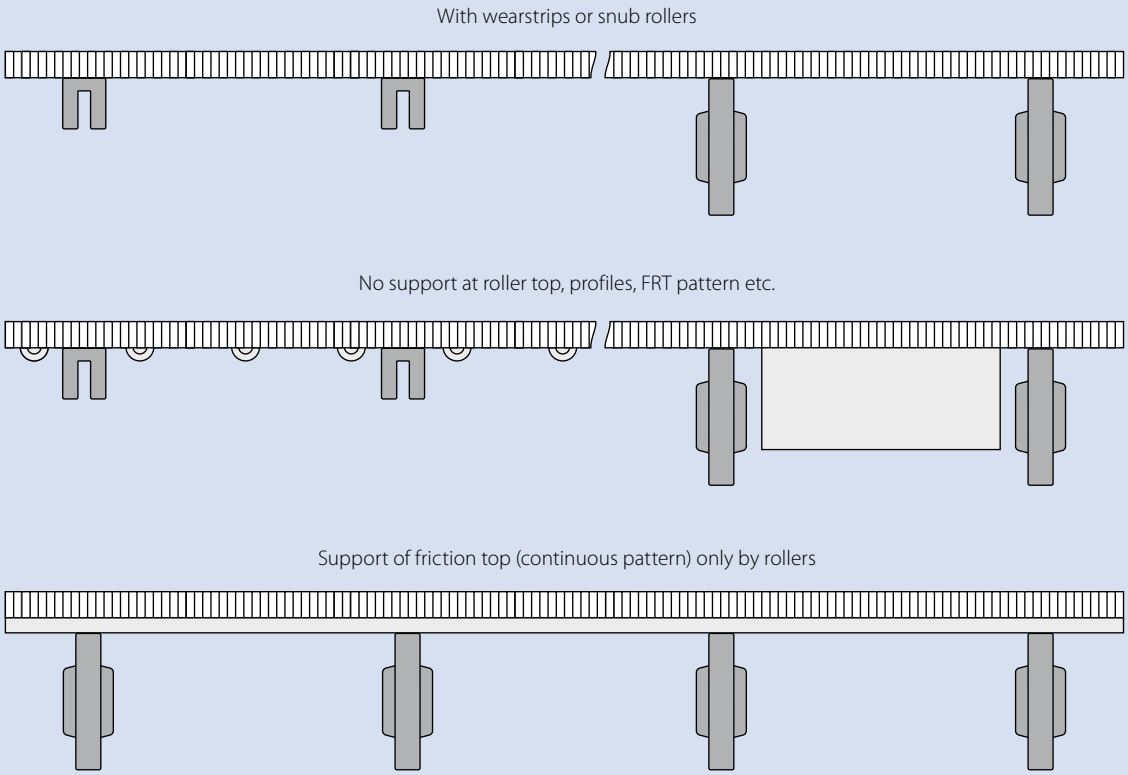

Height positioning of wearstrips

Chordal action makes it impossible for the wearstrips to always be at the optimal height relative to the sprocket. If you level the top surface of the wearstrip to the down point A_{min}, the belt will lift up on the upper point causing periodic noises when falling down again on the wearstrip. If you level the wearstrip to the upper point A_{max}, you will create forces on the wearstrip edge causing excessive wear and/or bending the wearstrip down.

On the sprocket data sheets you find a calculated value for A. The real value will differ slightly due to manufacturing tolerances and temperature-related expansion/contraction, therefore a slight adaption of this value might be necessary to fit your specific needs.

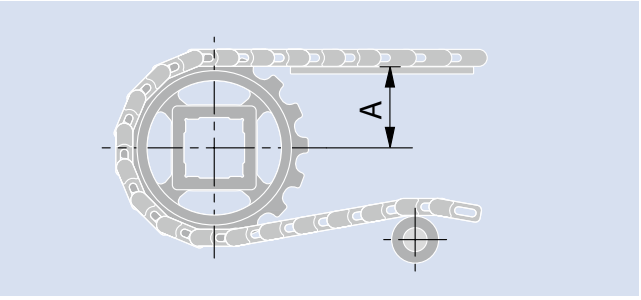

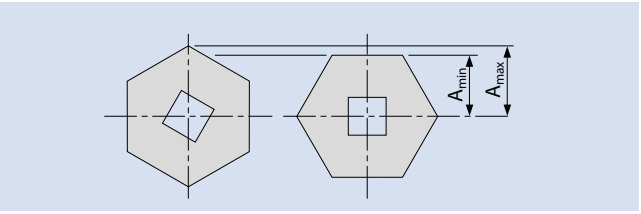

Attributes effects application	A_{max}		A_{min}	
	Advantage	Disadvantage	Advantage	Disadvantage
High belt speed		Higher heat generation especially with full width slider beds	Lower heat generation	Creates more noise and vibration
High load	Uniform belt motion at the discharge section	Generates heat especially with full width slider beds. A large radii at this edge is required.	Increases the wearstrips life Decreases the potential for static charges to form Belt is less bent/stressed at the transition between carryway and sprockets	Belt continuously lifts off of sliding support; not recommended for applications where product positioning and orientation is critical; not recommended for very light goods
Sprocket wrap		Is reduced which allows for higher force distribution per engaged tooth	Is increased which allows for lower force distribution per engaged tooth	
Tooth engagement		Is reduced. Thereby worse force distribution over teeth flank	Is raised. Thereby better force distribution over teeth flank	
Curved conveyors	Reduces belt lift-off from carryway			Creates more belt lift-off from carryway
Abrasion behaviour		Higher	Lower	
Impact load	Lower			Higher
Applications with heavy goods	Less additional load on sprockets and shafts at transition to neighboring conveyors			Higher additional load on sprockets and shafts at transition to neighboring conveyors
Ground integrated conveyor	Belt protrudes less			Belt protrudes more
Noise sensitive applications	Lower noise level			Higher noise level due to belt lift-off and set down
Prevent tipping/ movement of products	Better since there is no belt lift-off and set down on the sliding support			Worse due to the belt lift-off and set down on the sliding support

Wearstrip dimensions

Extruded wearstrips

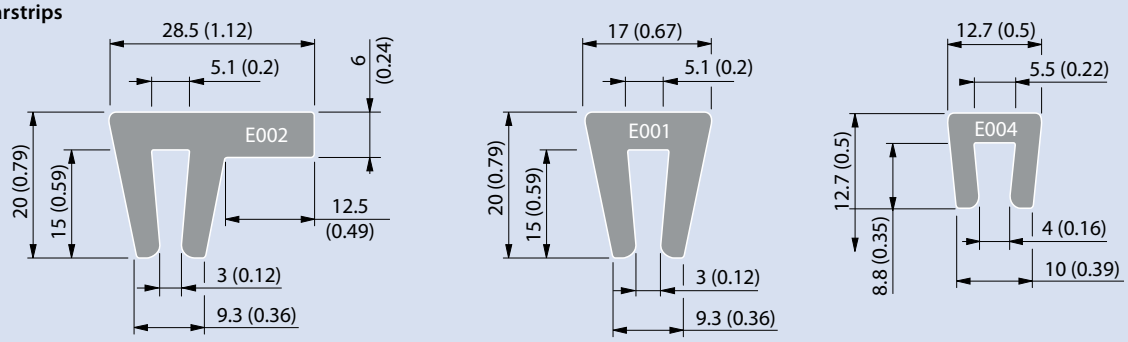

Wearstrip dimensions Series 11 with caps

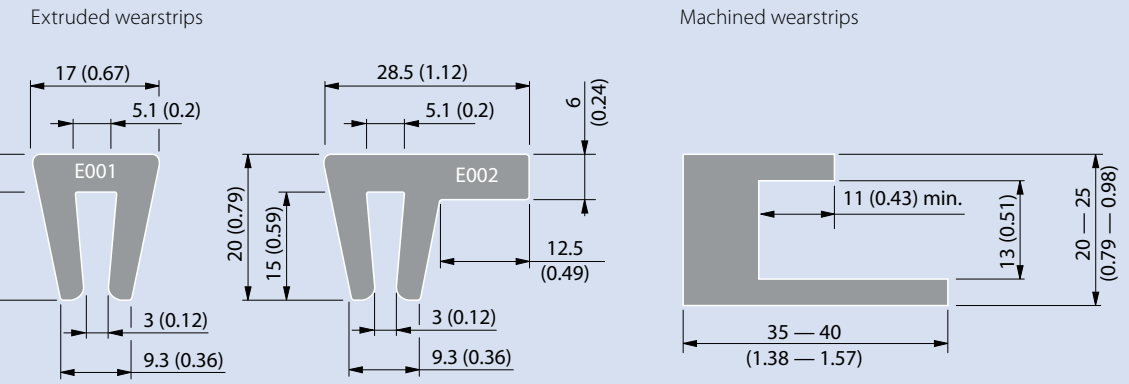

Wearstrip dimensions Series 11 with Hold Down caps

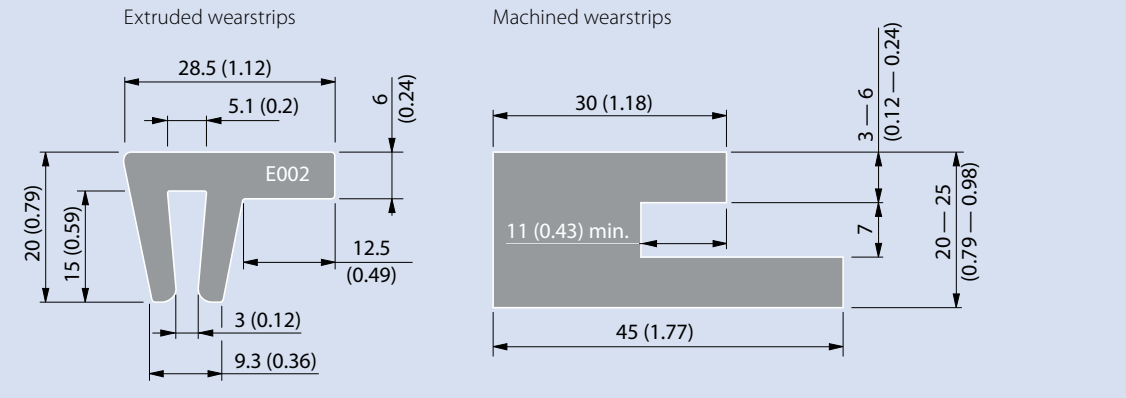

Dimensions in mm and inches (in). All imperial dimensions (inches) are rounded off.

Nose bar configuration

Free rotating nose bars are preferred, because the belt tension, wear and noise level will be increase by using a stationary nose bar (knife edge).

Series	Open	Surface	Pitch		Knife edge Radius minimum r2		minimum Distance							
							Ts		L1		L2		W	
			[mm]	[in]	[mm]	[in]	[mm]	[in]	[mm]	[in]	[mm]	[in]	[mm]	[in]
13	0	FLT	8	0.31	3	0.12	3	0.12	16	0.63	8	0.31	22	0.87
13	0	NPY	8	0.31	3	0.12	3	0.12	16	0.63	8	0.31	22	0.87
13	0	CTP	8	0.31	3	0.12	3	0.12	16	0.63	8	0.31	22	0.87
13	34	FLT	8	0.31	3	0.12	3	0.12	16	0.63	8	0.31	22	0.87
14	0	FLT	12.7	0.50	9.5	0.38	3	0.12	25.4	1.00	16	0.63	40	1.57
14	25	FLT	12.7	0.50	9.5	0.38	3	0.12	25.4	1.00	16	0.63	40	1.57
15	47	GRT	12.7	0.50	6.35	0.25	3	0.12	25.4	1.00	12	0.47	31	1.22
15	47	RSA	12.7	0.50	6.35	0.25	3	0.12	25.4	1.00	14	0.55	34	1.34

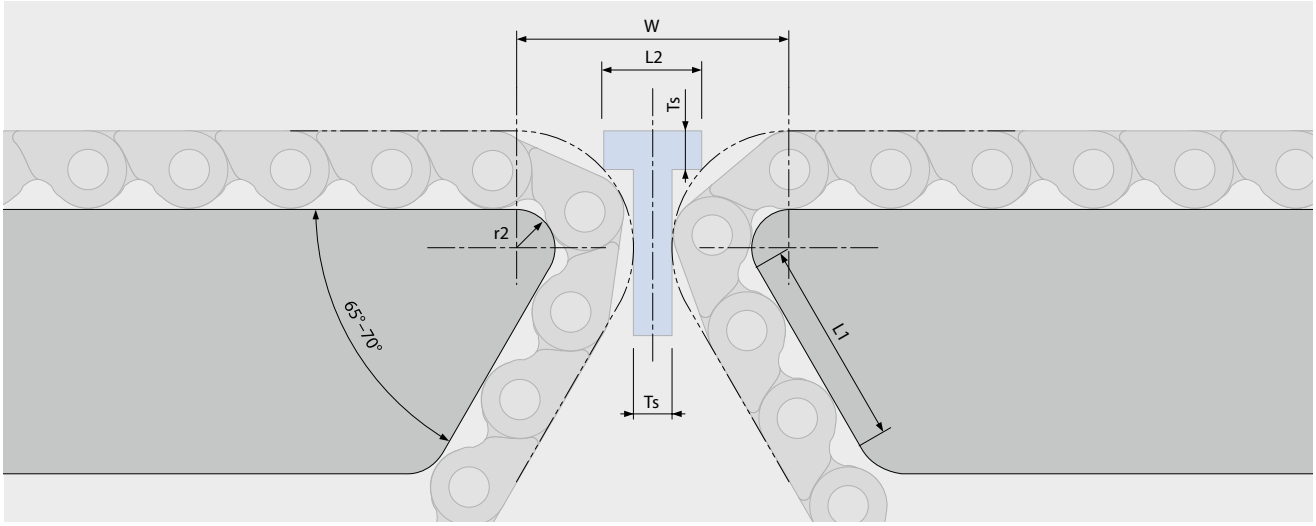

3.3 CONVEYOR LAYOUTS

Straight horizontal

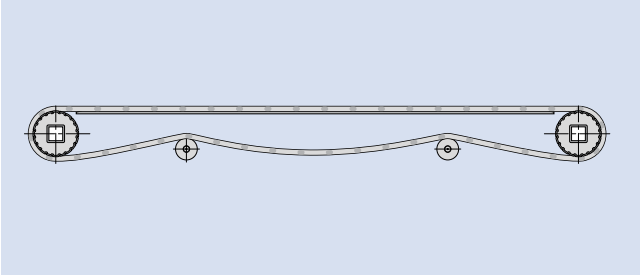

Straight inclining

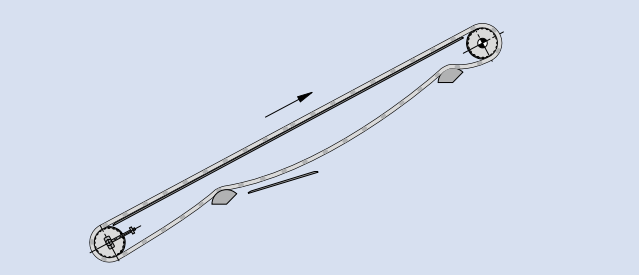

Straight inclining swan neck

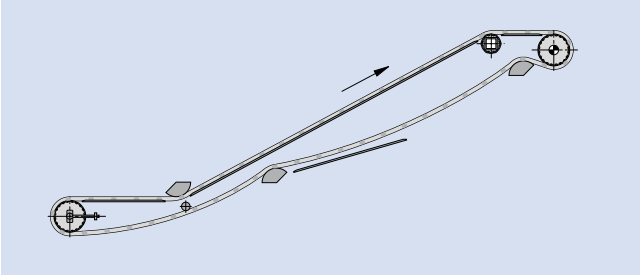

Straight declining

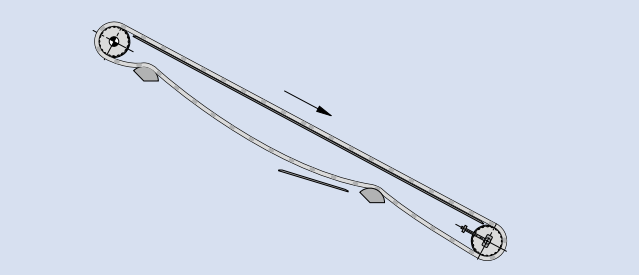

Side flexing L

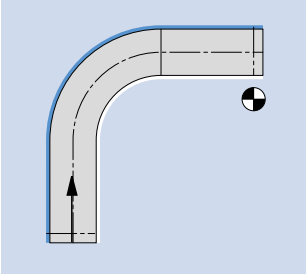

Side flexing U

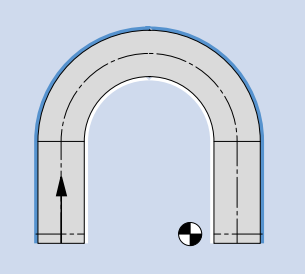

Side flexing C

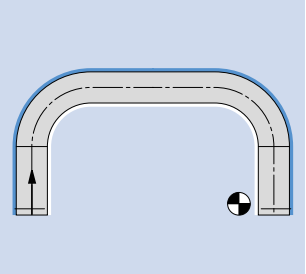

Side flexing S

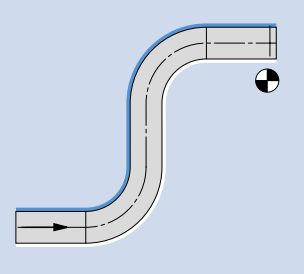

Spirals

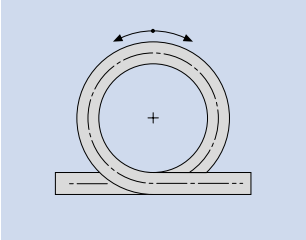

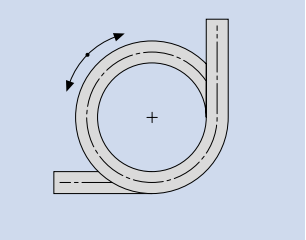

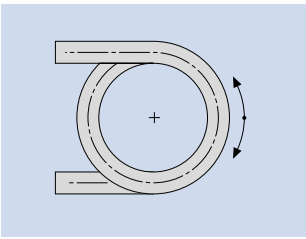

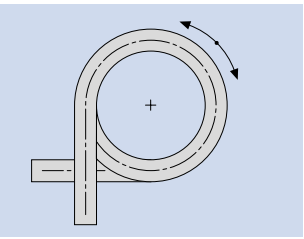

Double spirals

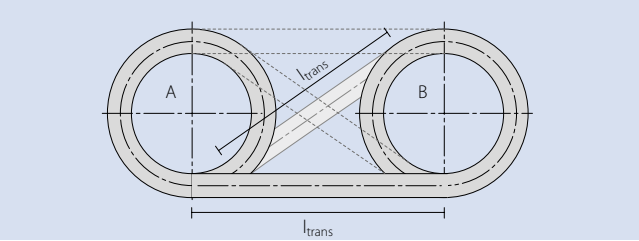

Incline/Decline

We always recommend the following:

- Only operate with a head drive, i.e. use the upper shaft as the drive shaft.
- Ensure there is always a screw-operated take-up system or a load-dependent tension take-up on the returnway since tension decreases with increasing inclination (caused by the belt sag).
- If sprockets are used at upper intermediate points, the center sprockets may not be fastened axially.
- If rollers are used at upper intermediate points, a minimum radius of approx. 80 mm is required.
- When shoe or wearstrips are used, the radius should be as large as possible in order to keep wear to a minimum. We recommend a minimum radius of approx. 150 mm. The width of the shoe should not be smaller than 30 mm.
- If the belt is more than 600 mm wide, we recommend providing additional support on the belt surface or on the profiles on the returnway.

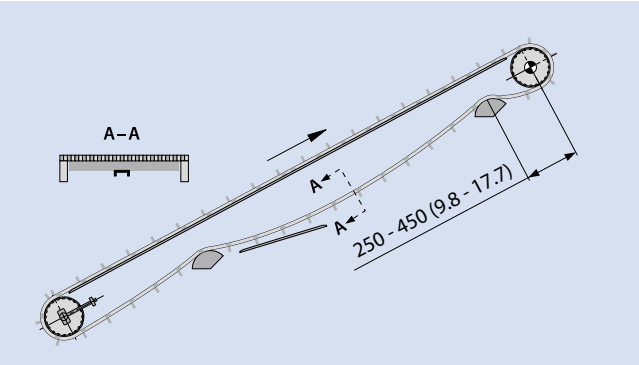

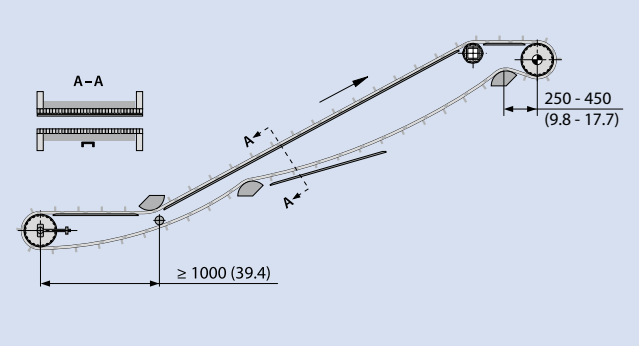

Rough guideline for achievable inclines:

- Flat top surface (FLT) 3 – 5°
- Friction top surface (FRT) 20 – 40°
- straight profiles < 60°
- bent profiles < 90°

Testing is always recommended to determine the actual possible incline angle for a particular product/use.

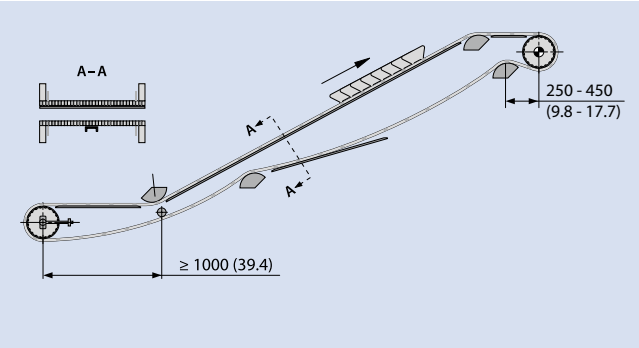

Decline conveying

For this conveyor design, a tail drive unit is possible if there is an active load-dependent tension take-up at the lower idle shaft (e.g. gravity, spring or pneumatic). Otherwise the general recommendations given above apply here.

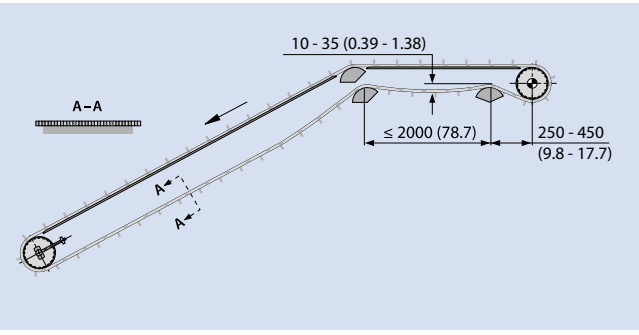

3.3 CONVEYOR LAYOUTS

Hold Down Tabs

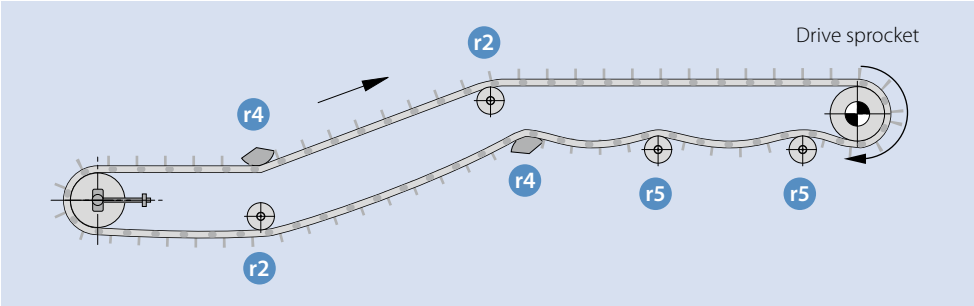

For Z – conveyors (Swan neck) with a belt width above 600 – 800 mm (24 – 32 inch) an additional guiding/Hold Down system is necessary. When the belt change direction from vertical to incline/decline for wider belts typically above 600 mm (24 inch) it will not be sufficient to hold down the belt on the (indented) side of the belt. In these cases, Hold Down Tabs on the bottom side of the belt are used to guide it through the back-flexing curve. For minimum back flex radius (r4) for the various series, please refer to our data sheets for recommendations.

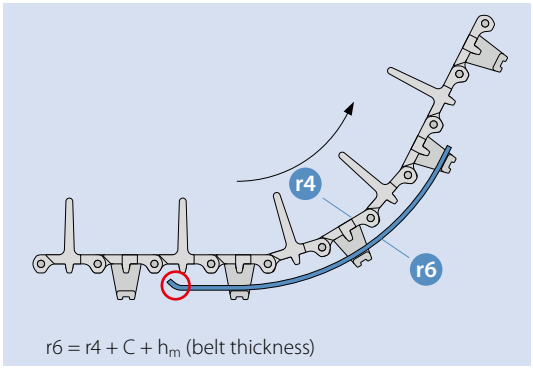

r6 = r4 + C + h_m (belt thickness)

It is very important that the wearstrips/guide rails supporting the Hold Down Tabs are very smooth and have sufficient radius at the entrance (red circle beside) to avoid them snagging on the frame entering into the guides. The outer radius of the guiding wearstrips, R6, is defined by the back flex radius r4 adding the C-measure of the Hold Down Tab (see table) and the belt thickness h_m (see data sheet).

- Please make sure that it will not be possible for the sprocket to engage the belt at the position of the Hold Down Tabs.
- Using Hold Down Tabs results in constraints with regards to sprocket and shaft size to ensure sufficient clearance to the shaft. For the minimum sprocket size and the equivalent maximum bore size when using Hold Down Tabs please consult the data sheet of the Hold Down Tab.
- By default, Hold Down Tabs are placed on every other row. It is not recommended to have a Hold Down Tab directly under a row of profiles.

Series	C-Value
S6.1	17 mm (0.67 in)
S8	10 mm (0.39 in)
S10	10 mm (0.39 in)

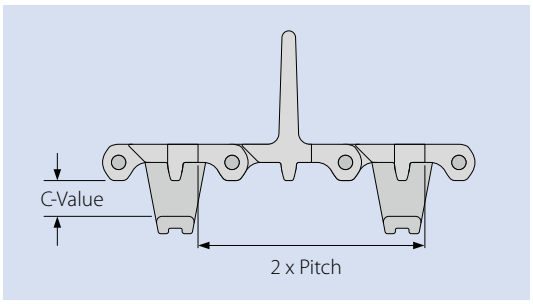

Correct position for the guiding wearstrips when using hold down tabs

Please note that the hold down tabs cannot always be installed on the center line of the belt. This is dependent on the belt width or the number of width increments. If the number of increments is an odd number, the HDT will be on the center line. If the number of increments is an even number, the HDT will be offset from the center line by half an increment.
(To avoid rounding errors, we recommend calculating in the unit of measurement (metric, imperial) of the respective series)

S6.1 HDT

HDT offset half an increment

Belt width (metric)	= 1000 mm (39.37 in)
Width increment (metric)	= 20 mm (0.79 in)
1000 mm/20 mm = 50	= even HDT offset 10 mm (½ an increment)

Example:

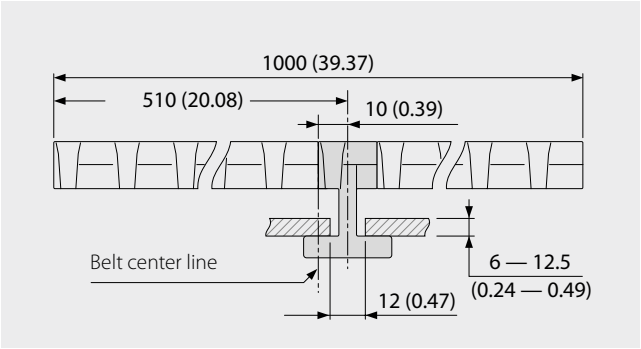

S10 HDT

HDT in the center line

Belt width (imperial)	= 1009.7 mm (39.75 in)
Width increment (imperial)	= 19.1 mm (0.75 in)
39.75 in/0.75 in = 53	= odd = HDT in the center line

Example:

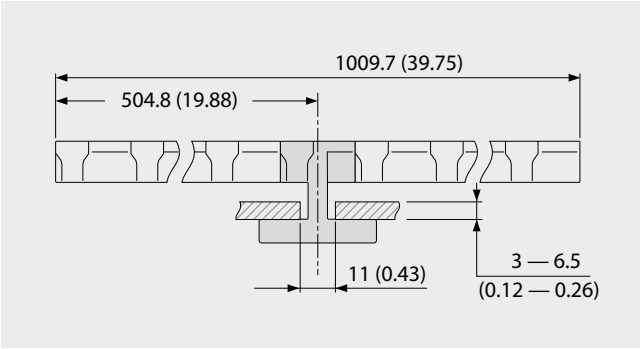

3.3 CONVEYOR LAYOUTS

Belt travel direction

The belts contact to the side wearstrip will cause friction and potential catch points between belt edge and wear stripe or conveyor parts. Our recommendation is, to choose the belt travel direction to press the outside belt edge to the inner belt side (support by inside edge).

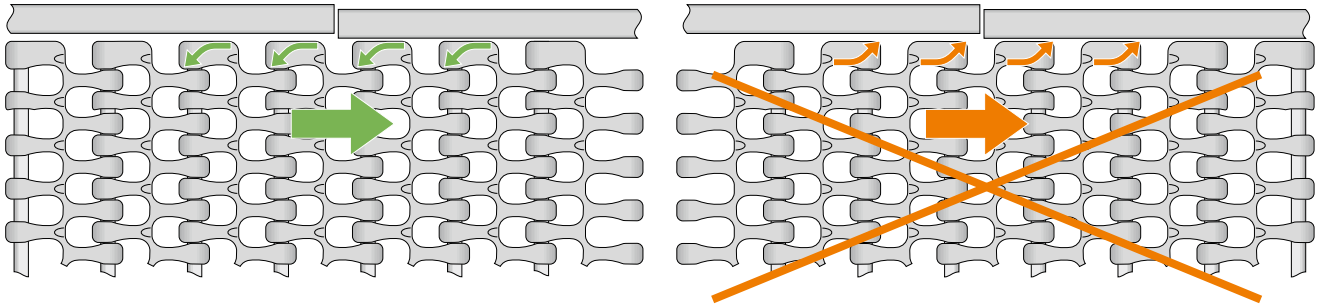

Some of our Prolink belts have a side edge design for a preferred travel direction.
The outside belt edge is in one direction (both hands down).
Preferred travel direction will press the outside belt edge to the inner belt side.
This will reduce the risk of belt edge breakage while touching the frame.

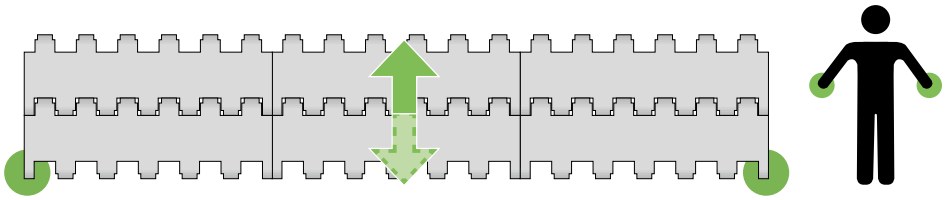

Prolink belts with outside edge in both directions – one side up, one side down – have no preferred travel direction.

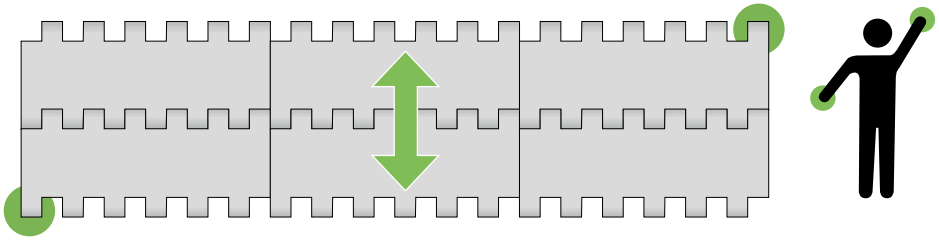

Series	bidirec-tional	preferred direction
S1	●	
S2		●
S3	●	
S4.1	●	
S5*		●
S6.1	●	
S7	●	
S8	●	
S9*		●
S9.1*		●
S10	●	
S11*		●
S13	●	
S14		●
S15	●	
S17	●	
S18*		●

* Curve belts (use as straight running belt also possible)

Side-flexing belts

Siegling Prolink side flexing belts are designed to be able to run in curves. The picture illustrates the possible layouts for curve conveying. The modules of Series 5, 9, 9.1, 11 and 18 create a mesh that allows the belt to collapse on the inner radius of the curve and thereby bend into the curve direction.

The belt pull which is spread over the complete belt width in straight running sections is concentrated in the outer module in curve sections. Therefore always check that $F_{adj} < F_{nom,curve}$ given in the data sheets is ensured.

Three standard tensioning methods can be used to achieve the correct belt tension:

- Screw-operated take-up system
- Gravity take-up system
- Catenary sag on the returnway near the drive

The following special conditions apply for side-flexing belts. Please ensure that they are met.

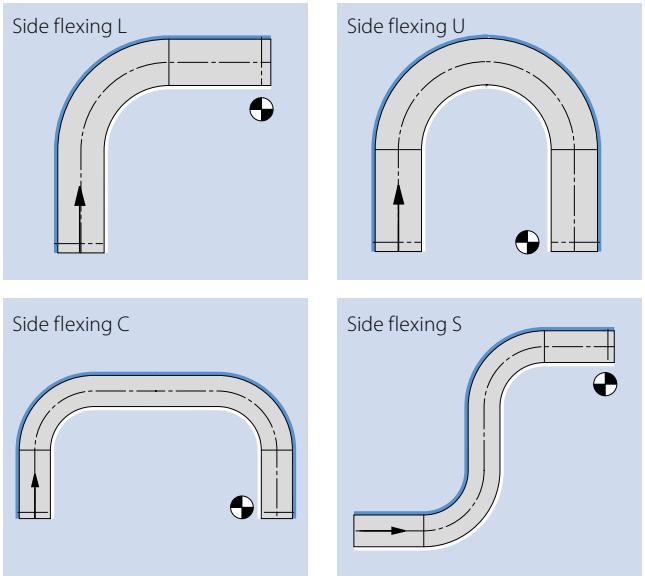

Special recommendations for side flexing belts
These belts must be supported by plastic guides at the sides around the curved section. Some plastics that can be used are PE 1000 or a plastic with lubricating properties on the inner radius.

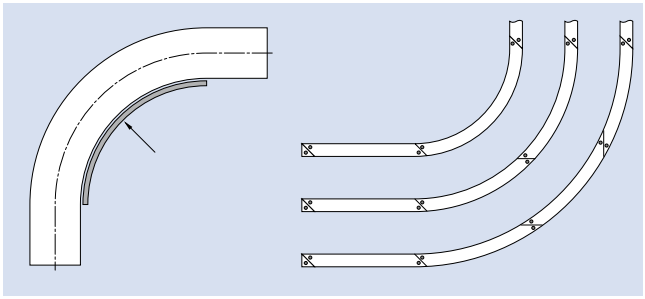

3.3 CONVEYOR LAYOUTS

Geometries of curves
We recommend designing a curved conveyor with the longer straight section on side of the motor (1).

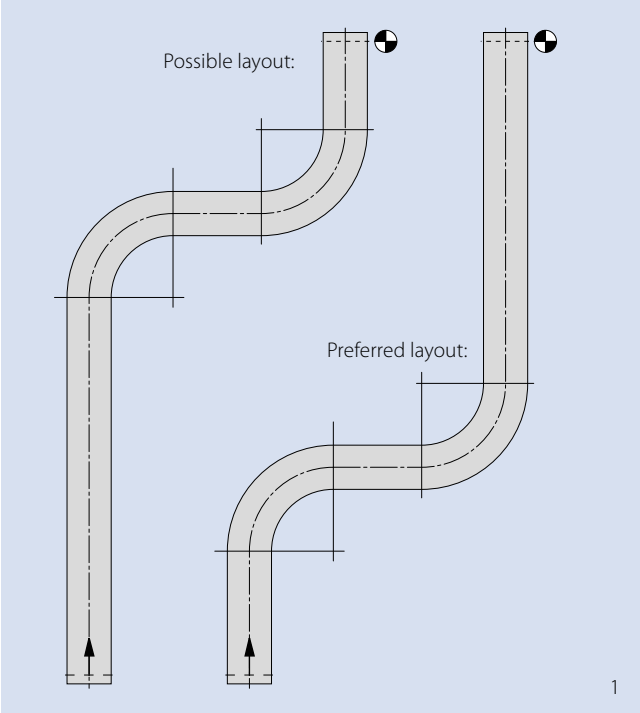

1

Be aware of a minimum straight section with a distance of one time the belt width before the curve and two times the belt width after and in between curves. This distance in between curves can be reduced if a curve is followed by another one in same direction (2).

Please contact customer service if space is restricted and you cannot construct the conveyor according to these recommendations.

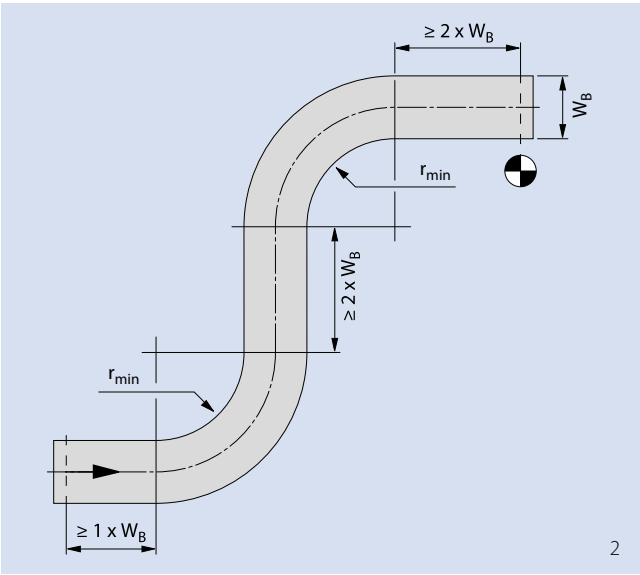

2

Belt travel direction
The belts contact to the inside wearstrip will cause friction and potential catch points between belt edge and wear stripe or conveyor parts.
Our recommendation is, to choose the belt travel direction to press the outside belt edge to the inner belt side (support by inside edge).

The belt design will influence the preferred belt travel direction in a curve conveyor.

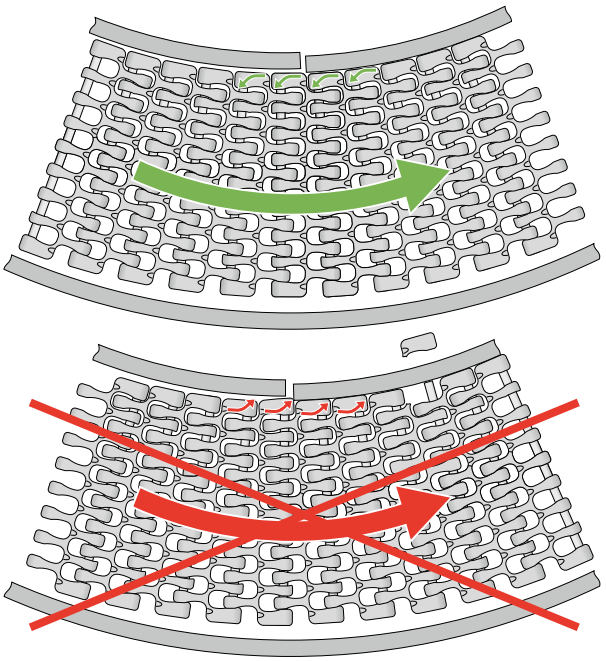

S18-44 GRT

Prolink curve belts can be used in **ClockWise (CW) and Counter ClockWise (CCW)** applications. Also dedicated belts for **CW or CCW** are available.
If there is a combination of both travel directions (S-Conveyor), the last curve before the drive considers the belt travel direction and correct choice of belt.

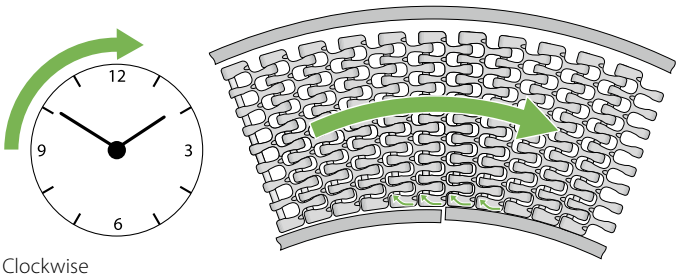

Clockwise

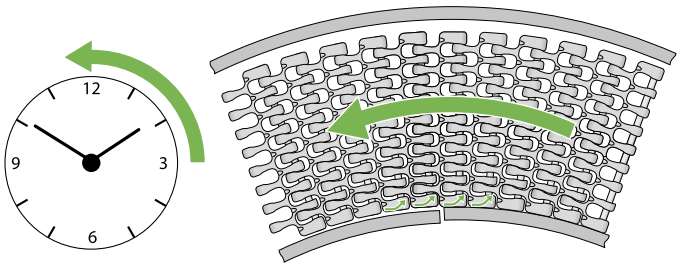

Counterclockwise

Overview of curve belt series with dedicated and non-dedicated travel direction.
(Non-dedicated travel direction is not explicit mention in the belt nomenclature)

	Belt travel direction:		
	CW	CCW	CW and CCW
	Belt nomenclature:		
	CW	CCW	
S5			●
S5 ST/S11 Combo	●		
S9			●
S9.1	●	●	
S11	●	●	
S11/S5 ST Combo		●	
S18	●	●	

3.3 CONVEYOR LAYOUTS

Series 5 and Series 9 belts can be used for ClockWise (CW) and Counter ClockWise (CCW) travel direction without any restrictions.

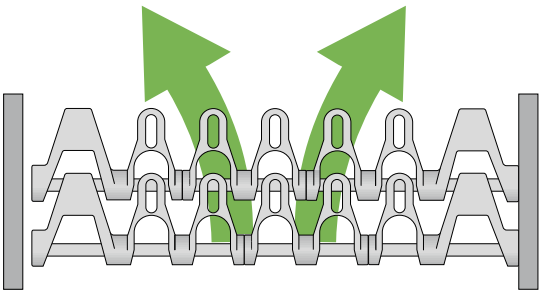

Series 5

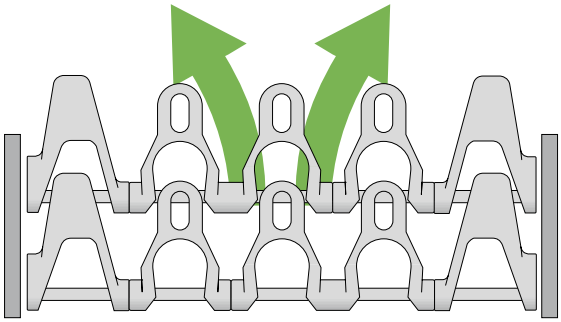

Series 9

A combination of different collapse factor modules in one belt is possible. A dedicated belt running direction CW or CCW should be considered. All our **COMBO belts of Series 5, S11 and S18** will give you this opportunity.

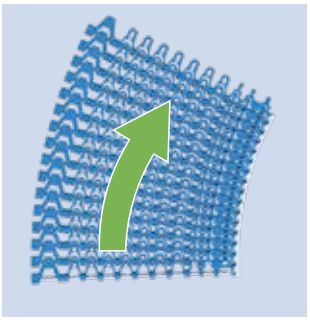

S5 ST/S11-45 GRT CW

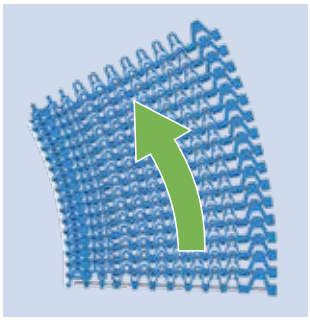

S11/S5 ST-45 GRT CCW

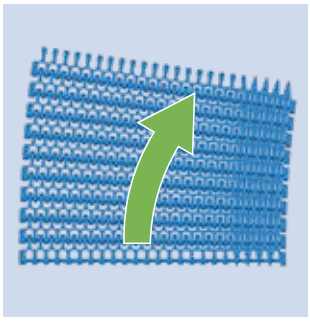

S18-44 GRT CW 2.2/1.7

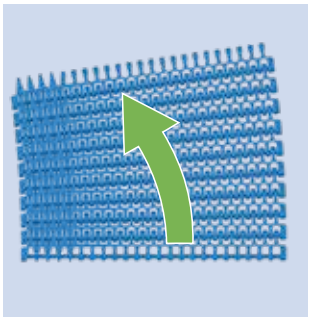

S18-44 GRT CCW 1.7/2.2

Also for **Series 9.1** the belt running direction CW or CCW is to consider:

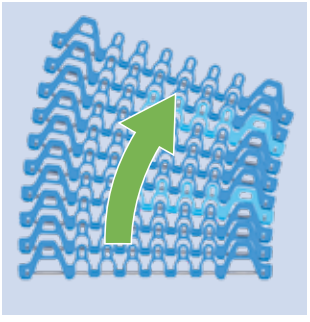

S9.1-57 GRT CW

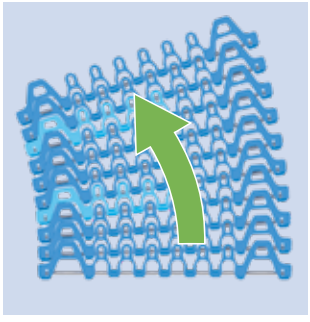

S9.1-57 GRT CCW

To optimize performance and ensure a consistent belt pull capacity, the Series 11 and Series 18 are using a headed hinge pin. This design will ensure the pins are always in contact with the outermost hinge. To benefit from this feature it is important that the pin head is located on the outer radius in the last curve. These belts should also be ordered as ClockWise (CW) or Counter ClockWise (CCW) belts.

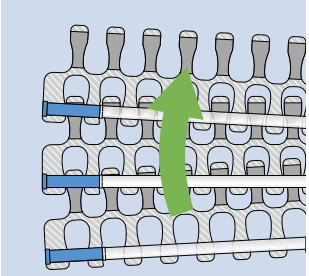

S18-44 GRT CW 2.2

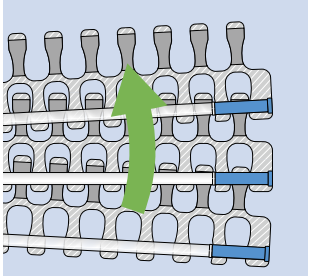

S18-44 GRT CCW 2.2

For Series 11 there is a unique color coding for the caps. The position of the pin head is marked by blue side caps/Hold Down caps (the opposite side is marked in white).
When fitting the belt it is important to remember this code – blue always on the outside (of the last curve).
For high speed applications the caps and Hold Down caps are made in a special robust resistant material (HW material). These can be identified by a darker shade, so that the outside in HW will be dark blue and the inside will be light gray.

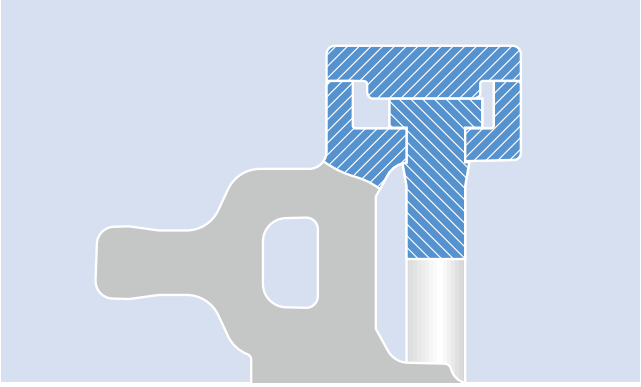

Series 11 pinhead with cap

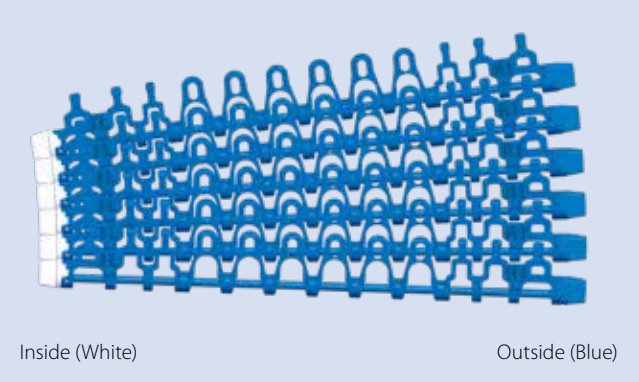

Inside (White) Outside (Blue)

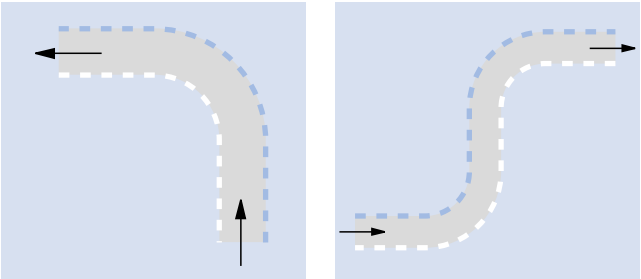

Belt with POM caps, blue outside, white inside

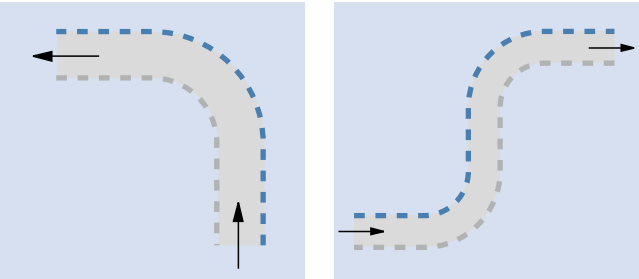

Belt with HW caps, dark blue on the outside, light grey on the inside

3.3 CONVEYOR LAYOUTS

Belt nomenclature and ordering guidelines Series 11
When ordering it's important to consider the conveyor layout as the belt is built to fit. The pattern will depend on the direction of the last curve:

- If the last curve turns right, a clockwise belt needs to be ordered for the curve.
- If the last curve turns left, a counter-clockwise belt needs to be ordered for the curve.

A CW or a CCW code in the belt description indicates whether the belt is to be used for a left hand or right hand curve.

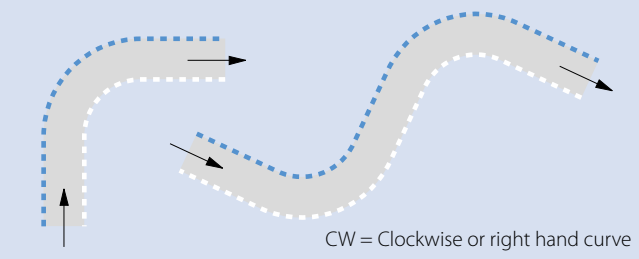
CW = Clockwise or right hand curve

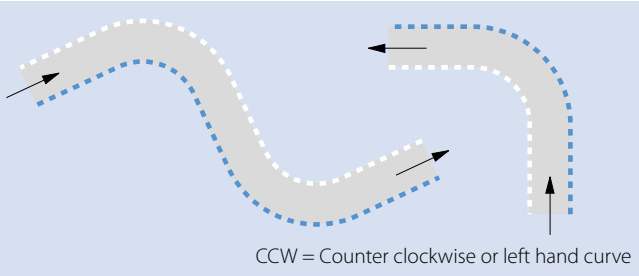
CCW = Counter clockwise or left hand curve

Series 11 with caps

Sketch	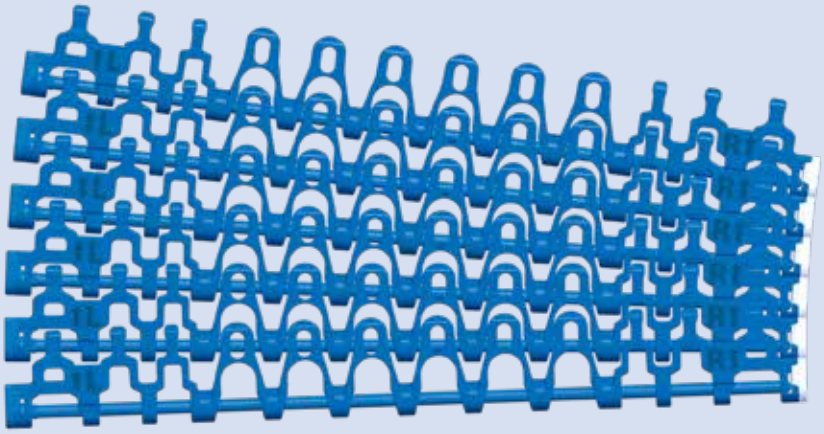
Belt designations	**S11-45 GRT CW POM-CR BL (POM BL/WT)** **S11-45 GRT CCW POM-CR BL (POM WT/BL)**
Description	CW = Clockwise (= Pin head is located on left-hand side/outer radius on the last curve) CCW = Counter clockwise (= Pin head is located on right-hand side/outer radius on the last curve) POM-CR = All side modules (blue) in POM-CR, center modules (white) in POM with flat cover caps on both sides (POM BL/WT) = Caps in POM BL on the left hand side and POM WT on the right hand side
Components	S11 CAP POM BL (or WT for CCW) S11-45 GRT SML POM-CR BL W172 S11-45 GRT SML POM-CR BL W122 S5/S11-45 GRT CM POM BL W100 S4.1/S8/S11 PIN PBT BL D5 S11 CAP POM WT (or BL for CCW) S11-45 GRT SMR POM-CR BL W122 S11-45 GRT SMR POM-CR BL W172
Belt width	Minimum belt width: 175 mm (6.89 in) Width increment: 25 mm (0.98 in)

Series 11 with Hold Down caps in HW

Sketch	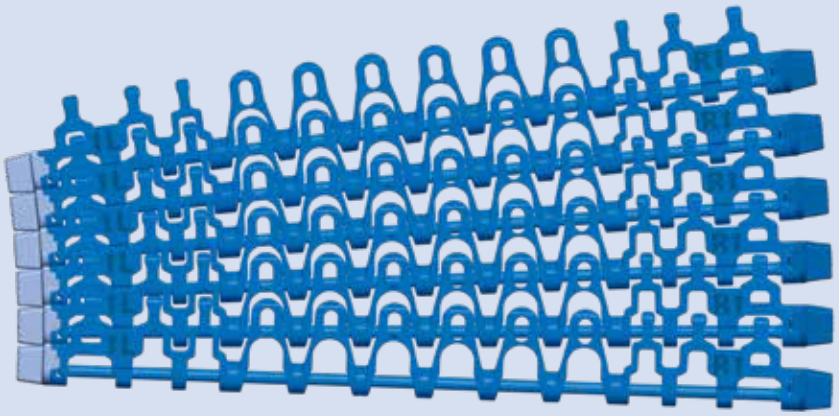
Belt designations	**S11-45 GRT CW HD POM-CR BL (HW DB/LG)** **S11-45 GRT CCW HD POM-CR BL (HW LG/DB)**
Description	CW = Clockwise (= Pin head is located on left-hand side/outer radius on the last curve) CCW = Counter clockwise (= Pin head is located on right-hand side/outer radius on the last curve) HD = Hold Down cap on both sides POM-CR = All side modules (blue) in POM-CR, center modules (white) in POM (HW DB/LG) = Hold Down caps in HW DB on the left hand side and HW LG on the right hand side
Components	S11 CAP HDL HW DB (LG for CCW) S11-45 GRT SML POM-CR BL W172 S11-45 GRT SML POM-CR BL W122 S5/S11-45 GRT CM POM BL W100 S4.1/S8/S11 PIN PBT BL D5 S11 CAP HDR HW LG (DB for CCW) S11-45 GRT SMR POM-CR BL W122 S11-45 GRT SMR POM-CR BL W172
Belt width	Minimum belt width: 175 mm (6.89 in) Width increment: 25 mm (0.98 in) Belt width excludes the extending caps of each 10 mm (0.39 in), overall belt width is width (Wxxx) + 20 mm (0.79 in).

3.3 CONVEYOR LAYOUTS

Belt nomenclature and ordering guidelines for combo belts
S11 and S5 ST can be combined. Combos will always have pins in stainless steel (SS). A combo can ensure the strength of the S5 ST combined with the narrow radius of S11.

Conveyor layout options for combo belts
Combo belts combining the tight radius feature of S11 with the high strength of S5 ST will normally only be used for uni-directional layouts (L, U and C) as the curve factor will depend on the direction of the turn.

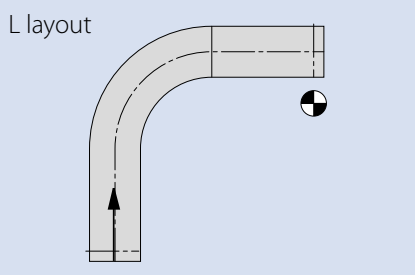

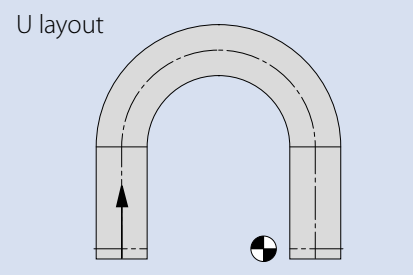

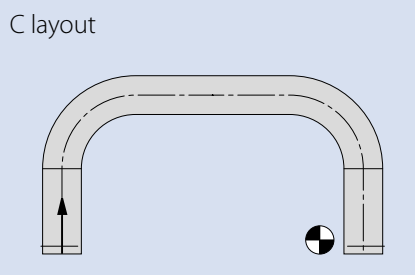

S5 ST/S11 combo (clockwise)

Sketch	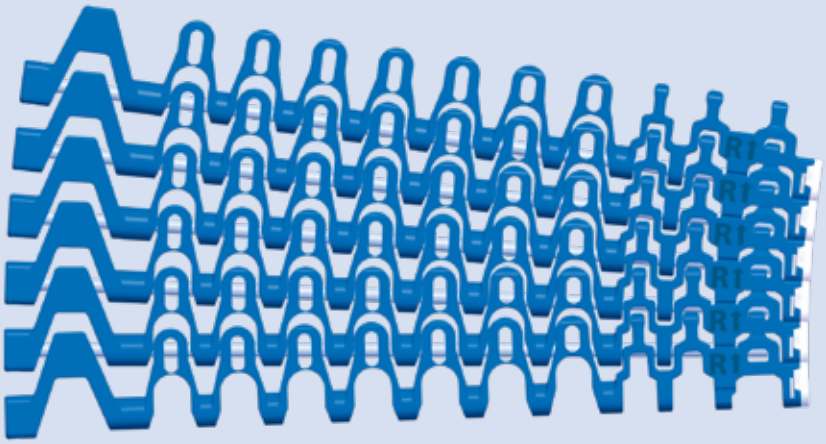
Belt designation	**S5 ST/S11-45 GRT CW POM-CR BL (POM WT)**
Description	CW = Clockwise (= SS pin with groove locked in the S5 ST module with clips on left-hand side) With flat cover caps on right hand side (inside radius on last curve) (in POM WT) POM-CR = All side modules (blue) in POM-CR, center modules (blue) in POM First listed name will be the left-hand side belt type (seen from above in travel direction)
Components	S5 CLP ST POM WT S5-45 GRT SML ST POM-CR DB W100 S5-45 GRT SML ST POM-CR DB W75 S5/S11-45 GRT CM POM BL W100 S5/S11-45 GRT CM POM BL W25 S5/S11 PIN ST SS D5 S11 CAP POM WT S11-45 GRT SMR POM-CR BL W122 S11-45 GRT SMR POM-CR BL W172
Belt width	Minimum belt width: 175 mm (6.89 in) Width increment: 25 mm (0.98 in)

For combo belts the text description shows how the belt is combined:

– S5 ST/S11 = S5 ST on the left hand side and S11 on the right hand side = a clockwise belt

– S11/S5 ST = S11 on the left hand side and S5 ST on the right hand = a counter-clockwise belt

S11/S5 ST combo (counter-clockwise)

Sketch	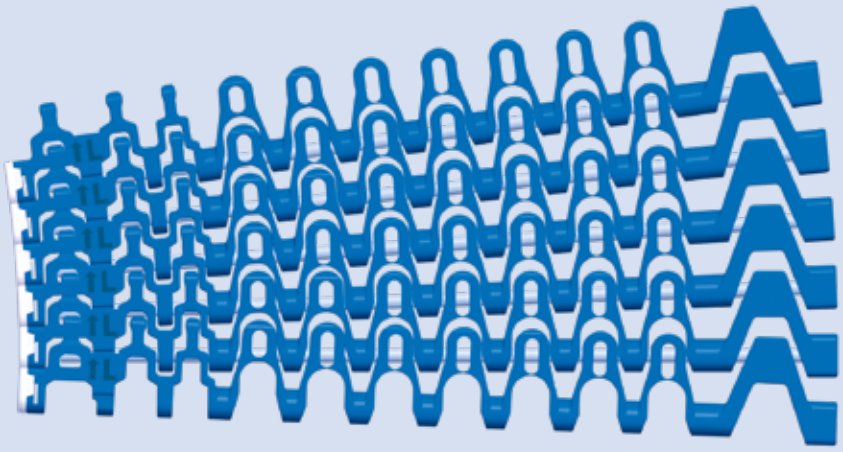
Belt designations	**S11/S5 ST-45 GRT CCW POM-CR BL (POM WT)**
Description	CCW = Counter clockwise (= SS pin with groove locked in the S5 ST module with clips on right-hand side) With flat cover caps on left hand side (inside radius on last curve) (in POM WT) POM-CR = All side modules (blue) in POM-CR, center modules (blue) in POM First listed name will be the left-hand side belt type (seen from above in travel direction)
Components	S11 CAP POM WT S11-45 GRT SML POM-CR BL W122 S11-45 GRT SML POM-CR BL W172 S5/S11-45 GRT CM POM BL W100 S5/S11-45 GRT CM POM BL W25 S5/S11 PIN ST SS D5 S5 CLP ST POM WT S5-45 GRT SMR ST POM-CR DB W100 S5-45 GRT SMR ST POM-CR DB W75
Belt width	Minimum belt width: 175 mm (6.89 in) Width increment: 25 mm (0.98 in)

3.3 CONVEYOR LAYOUTS

Minimum inner radius

The side-flexing radius r1 has to be equal or above the minimum inner radius, which depends on the series and belt width. The minimum inner radius is calculated with the collapse factor C_c. If the radius ist significantly higher than the minimum radius, belt clattering on inside side moduls may occur.

$$r1_{min} = W_B \cdot C_c$$

with:

$r1_{min}$ = inner radius
W_B = belt width
C_c = collapse factor

Series	Belt width [mm]	Belt width [in]	Factor C_c
Series 5, Series 5 G, Series 5 ST, Series 5 BT	100* – 199	3.94* – 7.86	1.8
	200 – 299	7.87 – 11.80	1.9
	≥ 300	≥ 11.81	2.0
Series 5 RG	125 – 199	4.92 – 7.86	1.6
	200 – 299	7.87 – 11.80	1.7
	300 – 399	11.81 – 15.74	1.8
	400 – 499	15.75 – 19.68	1.9
	≥ 500	≥ 19.69	2.0
Combo S5 ST/S11	all	all	1.45
	≥ 1000	≥ 39.37	1.55
Series 9	all	all	1.8**
Series 9.1	all	all	1.3 (-2.9)***
Series 11	all	all	1.4
Series 18 2.2, Series 18 2.2 G, Series 18 HDK, Series 18 FRT1	≤ 607	≤ 23.88	2.1
	> 607	> 23.88	2.2
Series 18 1.7	≤ 797	≤ 31.38	1.7
	> 797	> 31.38	1.8

* 175 mm (6.89 in) for S5 ST
** Special options available
See chapter 3.3 paragraph spiral conveyors
*** Special options available
See chapter 3.3 Module layout with specified inner radiee (series 9.1)

F2 – F8 side modules (Series 9)

In spiral applications, drum radius and minimum radius of the belt should be aligned. the drum radius however may never be smaller than the belt radius – but should not be significantly larger than the minimum radius of the belt. A drum radius that is too high leaves space for the inside side modules to move, causing an unstable belt run and possibly product movement.

If you want to exceed the minimum radius we provide special F-side modules which reduce the space on the inside curve at higher radii.

$$p_{inside} = \frac{r_{drum}}{r_{drum} + W_B} \cdot p$$

$$c_c = \frac{r_{drum}}{W_B}$$

with:

p = pitch
p_{inside} = inside pitch
r_{drum} = radius of spiral drum
W_B = belt width
C_C = collapse factor

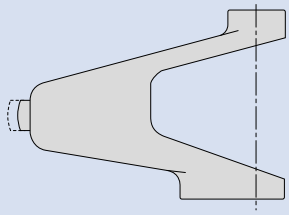

Module	p_{inside}	C_C
F2	34.05	2.12
F3	35.30	2.40
F4	36.30	2.65
F5	37.85	3.10
F6	39.35	3.68
F7	41.05	4.58
F8	42.35	5.50

Module layout with specified inner radii (series 9.1)

Series 9.1-57 GRT

At the outer radius of S9.1-57 GRT belts, only SMU (Side Module Universal) for a higher load transmission are used. By combining S9.1-57 GRT SMU and SMT at the inner radius, the belt's collapse factor is adjustable over a wide range. The greater the number of SMT modules on the inner radius, the lower the collapse factor and therefore the possible inner radius of the belt.

The following formula is used to calculate the smallest possible collapse factor for a specific inner radius:

$$C_c = \frac{r_{Drum}}{W_B}$$

r_{Drum} = cage radius
W_B = belt width
C_c = collapse factor

Example:

Cage radius (r_{drum}) = 2080 mm, belt width (W_B) = 850 mm

$$C_c = \frac{2080}{850} = 2.447$$

Cage radius (r_{drum}) = 81.89 in, belt width (W_B) = 33.46 in

$$C_c = \frac{81.89}{33.46} = 2.447$$

The next smaller value from the diagram below should be selected as the belt's collapse factor, i.e. 2.4.
The appropriate line on the diagram shows the module order required on the inner radius.

S9.1 Collapse factor	Belt edge structure on the inner radius (row #)										% on the inner	
	1	2	3	4	5	6	7	8	9	10	% SMU	% SMT
1.3											0	100
1.4											10	90
1.5											20	80
1.6											25	75
1.7											33.33	66.67
1.8											40	60
1.9											50	50
2.1											60	40
2.2											66.66	33.34
2.4											75	25
2.5											80	20
2.7											90	10
2.9											100	0

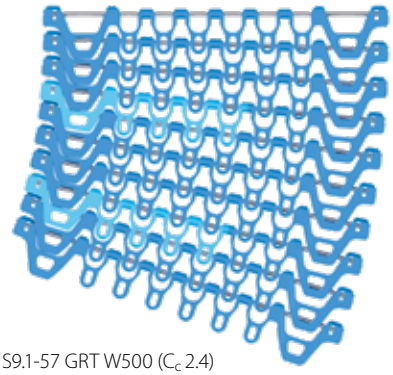

S9.1-57 GRT W500 (C_c 2.4)

Color Code for POM-CR material:

- S9.1 SMT (Side Module Tight)
- S9.1 SMU (Side Module Universal)

Color Code for PA material:

- S9.1 SMT (Side Module Tight)
- S9.1 SMU (Side Module Universal)

3.3 CONVEYOR LAYOUTS

Spiral conveyors

Spiral conveyors are a special variant of side-flexing belts as they consist of basically one curve. Spirals are always ascending or descending along a rotating drum. One complete revolution around the drum is called a "tier". Spirals can have up to 20 and more tiers. Please note that the collapse factors and minimum inner radius apply for spiral applications.
Our side-flexing belt (S5, S5/S11 Combo, S9, S9.1, S18) can be used in spirals.
If you are planning a spiral conveyor please contact customer service and send us the completed spiral checklist (see chapter 6.6 Questionnaires).

The main drive system is the driven inner cage, which consists of vertical bars. The curved belt is supported on the inner radius by the cage and is moved by traction between the belt and the cage. The direction of rotation of the cage determines whether the conveying is inclined or declined. The drive and tensioning unit depicted in the sketch provides the necessary belt tension. The speed of the motor must be coordinated with the speed of the cage drive.

It should be possible to move the tensioning unit a distance corresponding to approx. 1 % of the belt length. The belt can be supported by wearstrips as described in chapter 3.2.

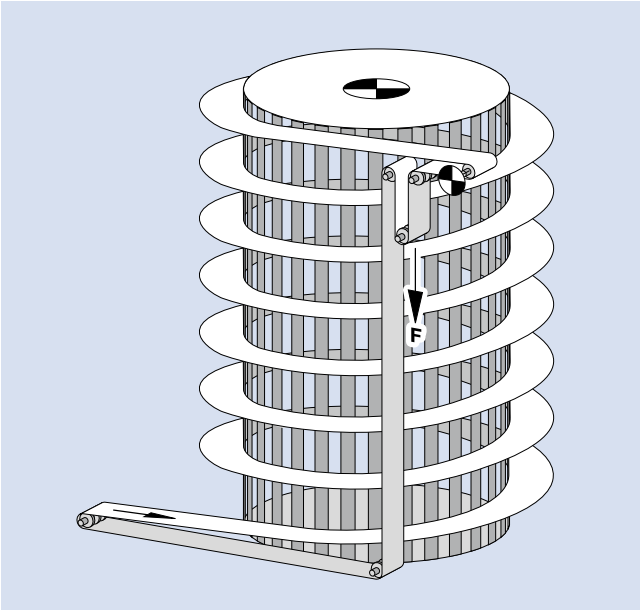

Belt travel direction (spiral applications)
For spiral application also the running direction of the belt should be considered.
The contact to the wear stripes will be at the drum – inside curve. But the drum will rotate faster than the belt. A belt travel direction with leg upfront is required.

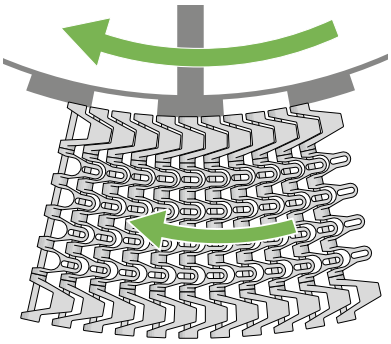
S5-45 GRT

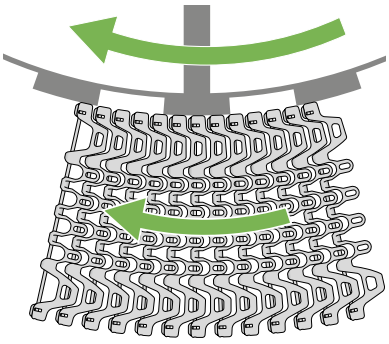
S9.1

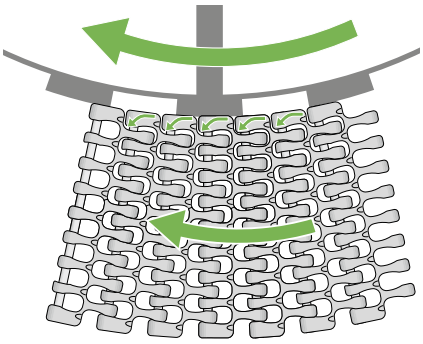
S18-44 GRT CCW

If curve belts with recommended travel direction like CW or CCW are used for a spiral application, please also consider the faster rotation of the drum. This means you have to use a CW belt for a CCW spiral and vis versa.

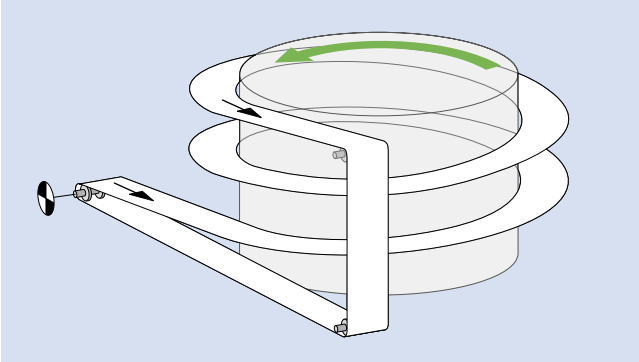

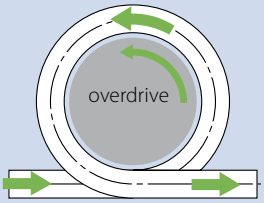

CW belt for CCW spiral

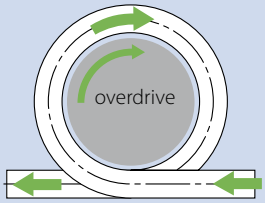

CCW belt for CW spiral

Preferred travel direction

Cage drive spiral CCW

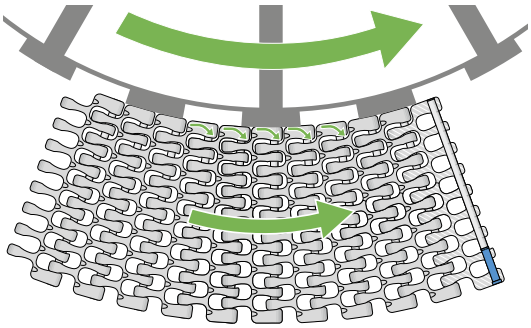

S18-44 GRT CW 2.2

Cage drive spiral CW

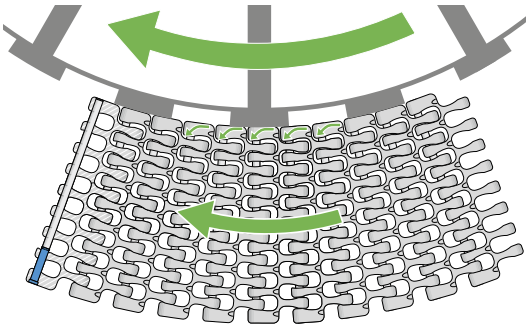

S18-44 GRT CCW 2.2

Layout options
Some possible layout options.

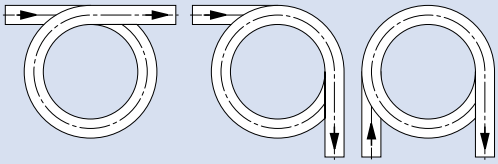

3.3 CONVEYOR LAYOUTS

High Tension spiral/elevator
To join two production units with different heights, high tension spiral (without cage)/elevators can be used.
This type of design (without driven inner cage) should not have more than 2 – 3 tiers.
With S5 BT side modules, 4 – 5 tiers are possible.

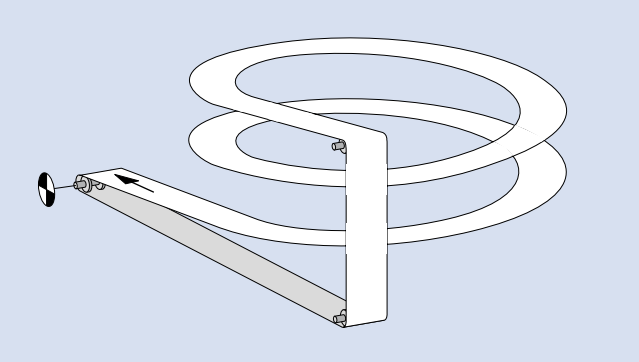

Bearing tab (Series 5)
For high tension spiral (elevator) with not more than 5 tiers, instead of a rotating drum special bearing tab modules can be used.
The mounted roller bearings on the side modules run on a rigid drum. Friction forces are thereby reduced significantly.

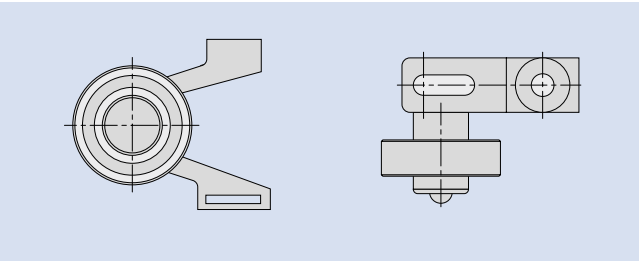

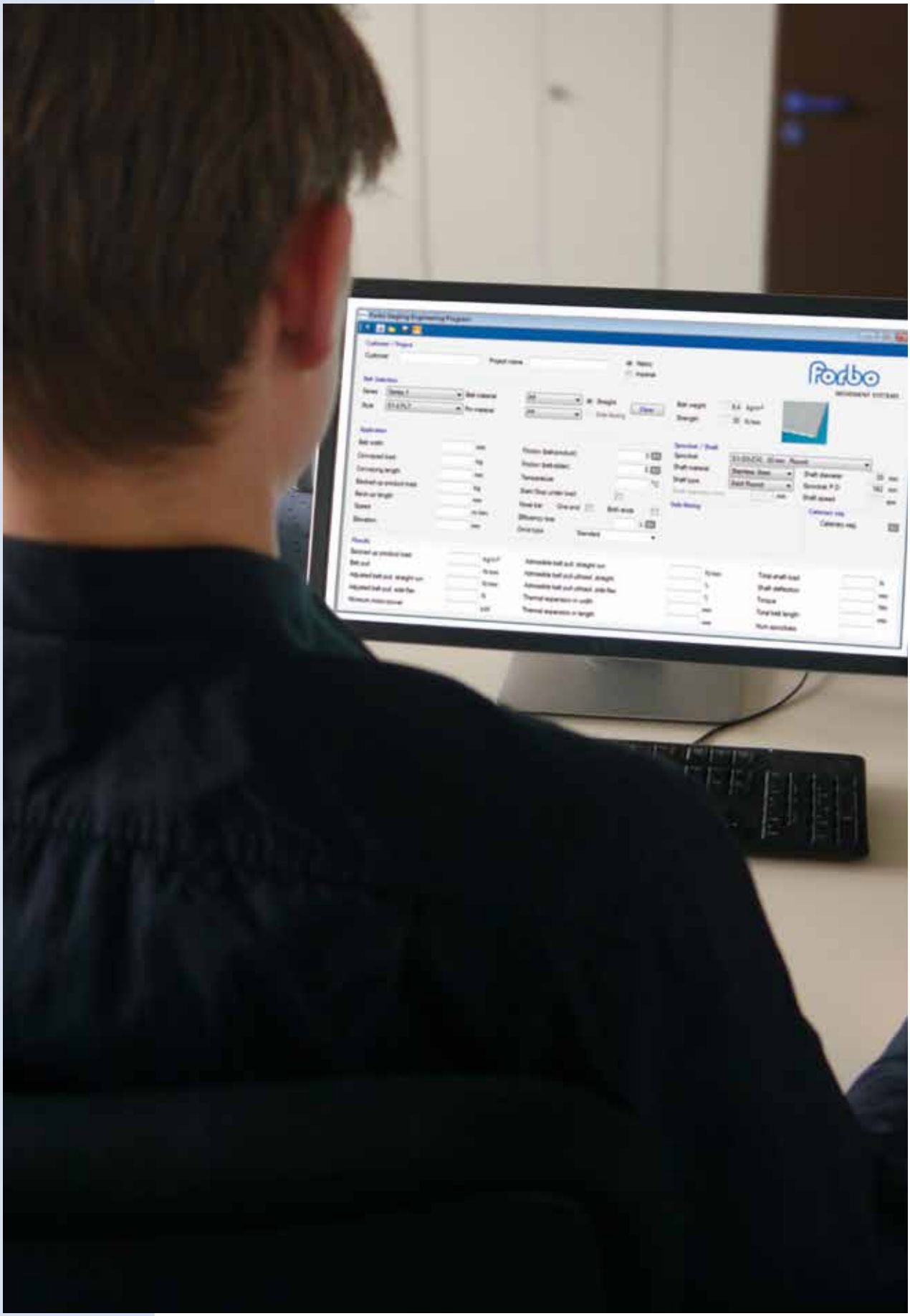
Fordbo

4 CALCULATIONS

4.1 Four step method

4.2 Calculation example

4.3 Shaft calculations

4.4 Temperature influence on belt dimensions

4.1 FOUR STEP METHOD

The following four steps will guide you through your belt design process. The symbols used are as follows:

	Designation	Symbols	Metric	Imperial
Forces	Effective belt pull	F_U	N	lb
	Adjusted belt pull	F_{adj}	N	lb
	Adjusted belt pull per mm/in belt width	F'_{adj}	$\frac{N}{mm}$	$\frac{lb}{ft}$
	Admissible belt pull per mm/in belt width	F'_{adm}	$\frac{N}{mm}$	$\frac{lb}{ft}$
	Nominal belt pull capacity per mm/in belt width	F'_{nom}	$\frac{N}{mm}$	$\frac{lb}{ft}$
Factors & coefficients	Coefficient of friction belt to accumulated products	μ_{acc}	–	–
	Coefficient of friction belt to slider	μ_s	–	–
	Operational factor	C_{Op}	–	–
	Temperature factor	C_T	–	–
	Conversion factor	g	9.81	1
Conveyor dimensions	Conveyor length/Center to center distance	l_{c-c}	m	ft
	Elevation of conveyor	h_e	mm	in
	Angle of incline/decline	α_i		
	Mass of conveyed product	m_p	kg	slug
	Mass of entire belt in conveyor	m_B	kg	slug
	Belt width	W_B	mm	in

A complete list of all the symbols used in this Engineering Manual can be found in the appendix in chapter 6.2.

A Calculate effective belt pull F_U

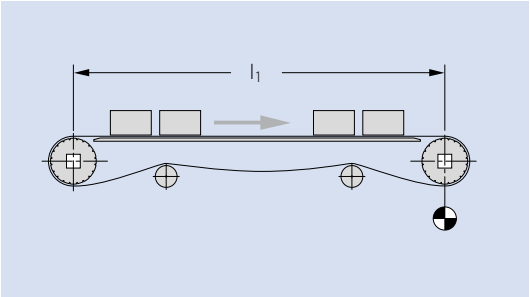

Straight running

$$F_u = \mu_s \cdot g \cdot (m_p + m_B) \qquad [N, lb]$$

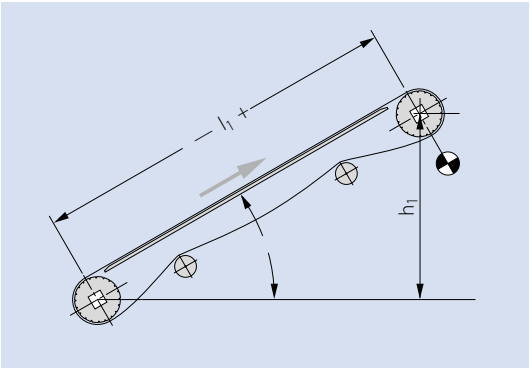

Inclining

$$F_u = \mu_s \cdot g \cdot (m_p + m_B) \pm g \cdot m_p \cdot \sin \alpha \qquad [N, lb]$$

(+ = inclined)
(– = declined)

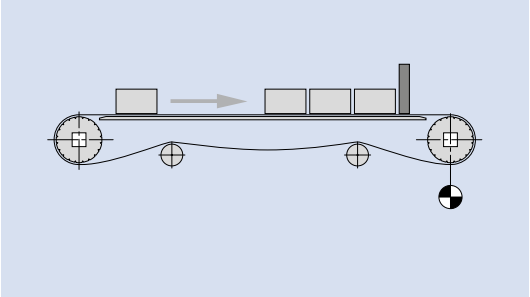

Straight running with accumulation

$$F_u = \mu_s \cdot g \cdot (m_p + m_B) + \mu_{acc} \cdot g \cdot m_p \qquad [N, lb]$$

Note: For side-flexing belts the belt tension within the curve is concentrated in the outer module only. Furthermore it has to be taken into account that the additional radial forces directed to the inside of the curve lead to higher friction loss.

$F_{U\,radius} = F_u$

For μ_s and μ_{acc} see table friction factors 2.1.

B Calculate adjusted belt pull F_{adj}

The measurable belt pull is higher if the optimal operating conditions cannot be obtained.
To take the operating conditions into account, the effective belt pull F_u is adjusted by the operational factor C_{Op}

$$F_{adj} = F_U \cdot C_{Op} \qquad [N, lb]$$

with:

Operational factor C_{Op}

	C_{Op}
Smooth operating conditions (smooth start)	+ 0
Start-stop operation (start when loaded)	+ 0.2
Belt speed greater than 30 m/min (100 ft/min)	+ 0.2
Nose bar at one end	+ 0.4
Nose bar both ends	+ 0.8
Swan-neck inclined conveyor	+ 0.4
Choose from drive configuration:	
Standard	+ 0
Belt center drive (bi-directional)	+ 0.2
Lower head drive	+ 0.1
Tail drive (push configuration)	+ 0.4
$1 + \sum C_1$	

Then calculate the adjusted belt pull per millimeter of belt width:

$$F'_{adj} = \frac{F_{adj}}{W_B} \qquad [N/mm, lb/ft]$$

C Calculate admissible belt pull F_{adm}

Temperature can reduce the maximum belt pull capacity. To take this effect into account the admissible belt pull F'_{adm} is calculated with temperature factor

$$F'_{adm} = F'_{nom} \cdot C_T \qquad [N/mm, lb/ft]$$

with:

Temperature factor C_T

The tensile strength of the different materials increases at temperatures below 20 °C but at the same time other mechanical properties are reduced at low temperatures. Therefore the C_T factor is set to 1.0 at temperatures below 20 °C.
The temperatures relate to the actual belt temperature. Depending on the application and conveyor layout the temperature of the conveyed product may be different.

Celsius [°C] from	Fahrenheit [°F] from	Belt material					
		PA	PA-HT	PE	POM	PP	TPC1
–60	–76	–	–	1.0	–	–	–
–40	–40	–	–	1.0	1.0	–	–
–20	–4	1.0	1.0	1.0	1.0	–	1.0
0	32	1.0	1.0	1.0	1.0	1.0*	1.0
+20	68	1.0	1.0	1.0	1.0	1.0	1.0
+40	104	1.0	1.0	0.90	1.0	1.0	0.87
+60	140	0.95	1.0	0.62	0.96	0.85	0.75
+80	176	0.72	1.0	–	0.75	0.65	0.67
+100	212	0.50	1.0	–	–	0.45	–
+120	248	0.40	0.9	–	–	–	–
+140	284	–	0.8	–	–	–	–
+155	311	–	0.7	–	–	–	–

* below + 10 °C avoid impact on belt and ensure smooth start; below + 5 °C PP is not recommended

D Validation of belt selection

Criteria for determining belt selection:

$$F'_{adj} < F'_{adm}$$

If this criteria is not fulfilled, change the material or belt series with a higher F'_{nom} value and repeat from Step A.

To calculate the utilization of belt strength use

$$\frac{F'_{adj}}{F'_{adm}} = \text{utilization} \qquad [\%]$$

4.2 CALCULATION EXAMPLE

The example on the following pages shall illustrate the four step method.

The example on the left uses **metric** units. The example on the right uses **imperial** units

An easier and faster way of doing these calculations is to use our Siegling Prolink Calculation Program which you can download at www.forbo.com/movement > E-Tools.



Conveyor length	**l_{c-c} =**	**4 m**	**13.12 ft**
Straight, no incline			
Belt width	**W_B =**	**1000 mm**	**3.28 ft**
Product load per meter belt length	**m_p =**	**700 kg/m**	**470 lb/ft**
Start-stop operation, normal conditions			
Belt support material: hardwood			
Belt speed	**v =**	**10 m/min**	**32.81 ft/min**

Calculate total product load:

$m_p = 700 \text{ kg/m} \cdot 4 \text{ m} = 2800 \text{ kg}$

$m_p = 470 \text{ lb/ft} \cdot 13.12 \text{ ft} = 6172 \text{ lb}$

Choose series: S8-FLT POM

Belt weight according to data sheet: $m'_B = 11 \text{ kg/m}^2$

Belt weight according to data sheet: $m'_B = 2.3 \text{ lb/ft}^2$

Calculate total belt weight:

$m_B = 11 \text{ kg/m}^2 \cdot 8 \text{ m} \cdot 1 \text{ m} = 88 \text{ kg}$

$m_B = 2.3 \text{ lb/ft}^2 \cdot 26.24 \text{ ft} \cdot 3.28 \text{ ft} = 194 \text{ lb}$

Step A

Material pair hardwood.
POM under dry, regular conditions: $\mu_s = 0.22$

S8 FLT POM: $F'_{nom} = 40 \text{ N/mm}$

Material pair hardwood.
POM under dry, regular conditions: $\mu_s = 0.22$

S8 FLT POM: $F'_{nom} = 2740 \text{ lb/ft}$

Calculate effective belt pull:

$F_U = 0.22 \cdot 9.81 \cdot (2800 \text{ kg} + 88 \text{ kg}) = 6232.88 \text{ N}$

$F_U = 0.22 \cdot 1 \cdot (6172 \text{ lb} + 194 \text{ lb}) = 1400.52 \text{ lb}$

Step B

Start-stop and normal operating conditions: $C_{Op} = 1.2$

Start-stop and normal operating conditions: $C_{Op} = 1.2$

Calculate adjusted belt pull:

$F_{adj} = 1.2 \cdot 6232.88 \text{ N} = 7479.46 \text{ N}$

$F'_{adj} = \frac{7479.46 \text{ N}}{1000 \text{ mm}} = 7.48 \text{ N/mm}$

$F_{adj} = 1.2 \cdot 1400.52 \text{ lb} = 1680.62 \text{ lb}$

$F'_{adj} = \frac{1680.62 \text{ lb}}{3.28 \text{ ft}} = 512.38 \text{ lb/ft}$

4.2 CALCULATION EXAMPLE

Step C

Operating temperature 65 °C: $C_T = 0.96$

Calculate admissible belt pull:

$F'_{adm} = 40\ N/mm \cdot 0.96 = 38.4\ N/mm$

Operating temperature 65 °C: $C_T = 0.96$

$F'_{adm} = 2740\ lb/ft \cdot 0.96 = 2630.4\ lb/ft$

Step D

Validate belt selection:

$F'_{adj} = 7.48\ N/mm < 38.4\ N/mm = F'_{adm}$

Utilization:

$7.48 : 38.4 = 19.5\ \%$

$F'_{adj} = 512.38\ lb/ft < 2630.4\ lb/ft = F'_{adm}$

$512.38 : 2630.4 = 19.5\ \%$

The belt selection is fine. If you calculate a utilization of > 80 % you need to increase admissible belt pull by changing the material or series selection. Then restart the four step method.

4.3 SHAFT CALCULATIONS

Shaft load F_s

$$F_s = \sqrt{F_{adj}^2 + (m_s \cdot g)^2}$$

with:

F_s	=	shaft load	[N, lb]
F_{adj}	=	adjusted belt pull	[N, lb]
m_s	=	mass of shaft	[kg, lb]
g	=	force conversion factor	[9.81 m/s^2, 1]

Example:

F_{adj} = 7479.46 N

1 m x 60 mm square steel shaft: m_s = 28.26 kg

$$F_s = \sqrt{(7479.46\ N)^2 + (28.26\ kg \cdot 9.81\ m/s^2)^2} = 7484.6\ N$$

F_{adj} = 1680.62 lb

1 m x 60 mm square steel shaft: m_s = 18.99 lb

$$F_s = \sqrt{(1680.62\ lb)^2 + (18.99\ lb \cdot 1)^2} = 1680.73\ lb$$

Shaft torque

$$M = \frac{F_{adj} \cdot D_0}{2000}$$

with:

M	=	torque	[Nm, ftlb]
F_{adj}	=	adjusted belt pull	[N, lb]
D_0	=	pitch diameter of sprocket	[mm, in]

Example:

F_{adj} = 7479.46 N

Sprocket S8 Z15: D_0 = 124 mm

$$M = \frac{7479.46\ N \cdot 124\ mm}{2000} = 463.73\ Nm$$

F_{adj} = 1680.62 lb

Sprocket S8 Z15: D_0 = 0.41 ft

$$M = \frac{1680.62\ lb \cdot 0.41\ ft}{2000} = 341.73\ lbft$$

4.3 SHAFT CALCULATIONS

Shaft deflection

The deflection can be calculated using the following formulas:

$$y_s = \frac{5 \cdot F_s \cdot l_b^3}{384 \cdot E \cdot I} \qquad [mm, in]$$

with:

y_s	=	shaft deflection	[mm, in]
F_s	=	shaft load	[N, lb]
l_b	=	bearing center distance	[mm, in]
E	=	modulus of elasticity	[MPa, psi]
I	=	area moment of inertia	[mm^4, in^4]
W_s	=	edge length of square shaft	[mm, in]
d_s, d_{in}, d_{out}	=	diameter of shaft	[mm, in]
t_s	=	wall thickness of shaft	[mm, in]

Material	E in $\left[MPa = \frac{N}{mm^2}\right]$	E in [10^6 psi]
Steel	200000	29.01
Stainless steel	180000	26.11
Aluminum	70000	10.15

Shaft type	I
Round	$\frac{\pi \cdot d_s^4}{64}$
Hollow round	$\pi \cdot \frac{d_s^4 - d_{in}^4}{64}$
Square	$\frac{W_S^4}{12}$
Hollow square	$\frac{W_S^4 - (W_S - 2 \cdot t_s)^4}{12}$

Shaft type

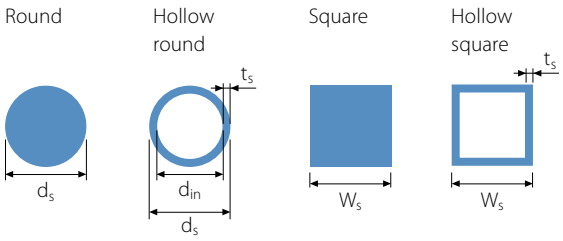

Example:

F_s = 7484.6 N

l_b = 1200 mm

E = for Steel: 200000 MPa

Calculate area moment of inertia I for square shaft with edge length W_s = 60 mm:

$$I = \frac{(60\ mm)^4}{12} = 1080000\ mm^4$$

Calculate y_s:

$$y_s = \frac{5 \cdot 7484.6\ N \cdot (1200\ mm)^3}{384 \cdot 200000\ N/mm^2 \cdot 1080000\ mm^4} = 0.78\ mm$$

F_s = 1680.73 lb

l_b = 47.24 in

E = for Steel: 29.01 · 10^6 psi

Calculate area moment of inertia I for square shaft with edge length W_s = 2.36 in:

$$I = \frac{(2.36\ in)^4}{12} = 2.59\ in^4$$

Calculate y_s:

$$y_s = \frac{5 \cdot 1680.73\ lb \cdot (47.24\ in)^3}{384 \cdot 29007547\ psi \cdot 2.59\ in^4} = 0.031\ in$$

Shaft torsion

$$\varphi = \frac{90 \cdot F_{adj} \cdot D_0 \cdot l_s}{\pi \cdot G \cdot I_T}$$

with:

φ	=	torsion angle in drive shaft	[°]
F_{adj}	=	adjusted belt pull	[N, lb]
D_0	=	pitch diameter	[mm, in]
l_s	=	shaft length	[mm, in]
G	=	modulus in shear strength	[MPa, psi]
I_T	=	torsional inertial force	[mm^4, in^4]

For proper engagement we recommend not exceeding $\varphi \leq 0.5$ ‰ of shaft length l_s in mm.

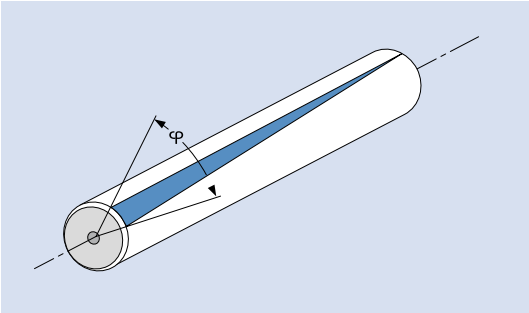

Material	G in $\left[\text{MPa} = \frac{N}{mm^2}\right]$	G in [10^6 psi]
Carbon steel	80000	11.6
Stainless steel	75000	10.88
Aluminum	27000	3.92

Shaft type		I_T [mm^4]
Round		$\pi \cdot \frac{d_s^4}{32}$
Hollow round		$\pi \cdot \frac{d_s^4 - d_{in}^4}{32}$
Square		$0.141 \cdot W_S^4$
Hollow square		$(Ws - ts^3) \times ts$

Example:

F_{adj} = 7479.46 N

Sprocket S8 Z15: D_0 = 122.7 mm

l_s = 1300 mm

G for carbon steel: 80000 MPa

Calculate torsional inertia force I_T for square shaft with edge length W_s = 60 mm

$I_T = 0.141 \cdot (60\ mm)^4 = 1827360\ mm^4$

$$\varphi = \frac{90 \cdot 7479.46\ N \cdot 122.7\ mm \cdot 1300\ mm}{\pi \cdot 80000\ MPa \cdot 1827360\ mm^4} = 0.234°$$

0.5 ‰ of 1300 mm = 0.65 ≥ 0.234 = φ

F_{adj} = 1680.62 lb

Sprocket S8 Z15: D_0 = 4.83 in

l_s = 51.18 in

G for carbon steel: $11.6 \cdot 10^6$ psi

Calculate torsional inertia force I_T for square shaft with edge length W_s = 2.36 in:

$I_T = 0.141 \cdot (2.36\ in)^4 = 4.374\ in^4$

$$\varphi = \frac{90 \cdot 1680.62\ lb \cdot 4.83\ in \cdot 51.18\ in}{\pi \cdot 11.6 \cdot 10^6\ psi \cdot 4.374\ in^4} = 0.235°$$

0.5 ‰ of 1300 mm = 0.65 ≥ 0.235 = φ

4.3 SHAFT CALCULATIONS

Power requirement at the drive drum

$$P_S = \frac{F_{adj} \cdot v}{60000}$$

with:

P_S	=	power at drive end of shaft	[kW, hp]
F_{adj}	=	adjusted belt pull	[N, lb]
v	=	speed	[m/min, ft/min]

Example:

$$P_s = \frac{7479.46\ N \cdot 10\ m/min}{60000} = 1.25\ kW$$

$$P_s = \frac{1680.62\ lb \cdot 32.81\ ft/min}{33000} = 341.73\ hp$$

Please note that the calculated power is the net power necessary at the drive drum and does not take efficiency losses of e.g. the motor or gearbox into account. Furthermore it is recommend to install a motor with a reasonable reserve capacity.

Shaft revolutions

$$R_S = \frac{v \cdot 1000}{D_0 \cdot \pi}$$

$$R_S = \frac{v \cdot 12}{D_0 \cdot \pi}$$

with:

R_S	=	shaft revolutions	[1/min]
v	=	belt speed	[m/min, ft/min]
D_0	=	pitch diameter	[mm, in]

Example:

v = 10 m/min

Sprocket S8 Z15: D_0 = 122.7 mm

$$R_s = \frac{10\ m/min \cdot 1000}{122.7\ mm \cdot \pi} = 25.94\ \frac{1}{min}$$

v = 32.81 ft/min

Sprocket S8 Z15: D_0 = 4.83 in

$$R_s = \frac{32.81\ ft/min \cdot 12}{4.83\ in \cdot \pi} = 25.95\ \frac{1}{min}$$

4.4 TEMPERATURE INFLUENCE ON BELT DIMENSIONS

Plastics can expand or contract significantly when temperatures fluctuate. To calculate dimension changes in width and length, the following formulas are used

$\Delta l = l_B \cdot (T_2 - T_1) \cdot \alpha$ [mm, in]

$\Delta W = W_B \cdot (T_2 - T_1) \cdot \alpha$ [mm, in]

Δl = change in length [mm, in]

ΔW = change in width [mm, in]

\+ = elongation

– = contraction

l_B = belt length at initial temperature [m, in]

W_B = belt width at initial temperature [m, in]

T_2 = operating temperature [°C, °F]

T_1 = initial temperature (normally 21 °C/70 °F) [°C, °F]

α = coefficient of thermal expansion (see table) [mm/m °C, 10^6 in/in °F]

Conversion: $\frac{10^{-6}\ \text{in}}{\text{in} \cdot °\text{F}} = 555.5\ \frac{\text{mm}}{\text{m} \cdot °\text{C}}$

Material	α^* $\frac{\text{mm}}{\text{m} \cdot °\text{C}}$	α^* $\frac{10^{-6} \cdot \text{in}}{\text{in} \cdot °\text{F}}$
PA	0.12	66.6
PE	0.21	116.6
POM	0.12	66.6
PP	0.15	83.3
Metals		
CS	0.012	6.6
SS	0.017	9.4
SSS	0.016	8.9

* Average values for the admissible temperature range

Complete list for expansion coefficient of all materials can be foud on page VI-15.

Example:

At an ambient temperature of 20.1 °C, the belt is used for conveying hot goods, resulting in an operating temperature of 90 °C. Belt length 30 m, belt width 1 m, belt material polypropylene.

$\Delta l_B = 30\ \text{m} \cdot (90 - 21)°\text{C} \cdot 0.15\ \frac{\text{mm}}{\text{m} \cdot °\text{C}} = 310.5\ \text{mm}$

$\Delta W_B = 1\ \text{m} \cdot (90 - 21)°\text{C} \cdot 0.15\ \frac{\text{mm}}{\text{m} \cdot °\text{C}} = 10.35\ \text{mm}$

At an ambient temperature of 70 °F, the belt is used for conveying hot goods, resulting in an operating temperature of 194 °F. Belt length 1181.1 in, belt width 39.37 in, belt material polypropylene.

$\Delta l_B = 1181.1\ \text{in} \cdot (194 - 70)°\text{F} \cdot 83.3\ \frac{10^{-6}\ \text{in}}{\text{in} \cdot °\text{F}} = 12.2\ \text{in}$

$\Delta W_B = 39.37\ \text{in} \cdot (194 - 70)°\text{F} \cdot 83.3\ \frac{10^{-6}\ \text{in}}{\text{in} \cdot °\text{F}} = 0.41\ \text{in}$

The increase in belt length of 315 mm is significant which means that the returnway must be able to absorb the additional belt sag. In order to accommodate the increase in width, the conveyor frame must have a wider design.

When operating at temperatures below 21 °C (70 °F), the length and width contract. Especially in freezer applications, the reduction in length and width can be significant and this must be accommodated in the conveyor design and during belt installation. The initial belt length needs to be considered in particular when belts are installed at ambient temperatures but are expected to subsequently operate below freezing point, resulting in a significantly shorter belt length.



5 OPERATING INSTRUCTIONS

5.1 Preparing for the installation

5.2 Sprocket installation

5.3 Wearstrip arrangement curve belts

5.4 Joining belt sections – installing and removing hinge pins

5.5 Installing a modular belt

5.6 Maintenance and repair

5.7 Cleaning

5.8 Preventive maintenance and troubleshooting

5.1 PREPARING FOR THE INSTALLATION

Steps prior to belt installation

- Inspect the condition and functionality of the conveyor and all relevant conveyor components, i.e. drives, drive chains or belts, shafts, sprockets, wearstrips, bearings, support shoes and rollers. Repair or replace any damaged or worn components.
- Pay particular attention to the condition of the wearstrips. Even if the wearstrips are new, make sure the surface is clean and smooth and has no particles such as sand, dust or weld splatter embedded. New wearstrips may have become dirty if work on the conveyor has taken place after the wearstrips were installed. Running a hand over the wearstrip surface will reveal embedded particles. If the surface is not smooth, the wearstrip must either be replaced or the embedded particles must be removed.
- Failure to ensure clean and smooth wearstrip surfaces prior to installing the belt may reduce the belt life significantly.
- Check wearstrip joints for alignment and smoothness. Verify correct height between wearstrips and drive and idler shafts to ensure correct sprocket engagement. If applicable, verify the distance between sprockets and snub rollers as well as the distance between returnway rollers.
- If necessary, clean the conveyor, including frame, carryway and returnway supports, shafts, support rollers and shoes and replace any damaged or worn components.
- If possible, do not unpack the belt until immediately before the installation. Unpack the belt at the installation site and avoid dragging or rolling the belt over rough or dirty floors.

Additional inspection and checklist for radius conveyors utilizing Series 5, Series 9, Series 9.1, Series 11 and Series 18

- Using a section of the belt, ensure the belt can move freely on the wearstrips through the entire belt path on both carryway and returnway.
- Using a section of the belt, ensure the belt engages correctly with drive and idler sprockets without touching any obstructions such as transfer plates.
- Ensure the sidewall-mounted wearstrips in the curves are correctly positioned to prevent the outer edge of the belt from lifting as the belt goes through the curve(s) and is pushed against the wearstrips guiding the inside of the belt.
- After installing the entire belt, and prior to starting the drive motor, check that the belt can move freely on the wearstrips without constrictions on the carryway and the returnway.
- If possible, start the conveyor at low speed and verify that the belt is running smoothly, engages with all sprockets and that no belt lifting is occurring.

5.2 SPROCKET INSTALLATION

Belt tracking
Correct belt tracking are realized by either guiding wear-strips or by one (1) of the sprockets on drive and idler shaft.

Forbo Movement Systems recommend guiding side-flexing belts using the wearstrip (see next page). For straight running belts, either tracking method can be used.

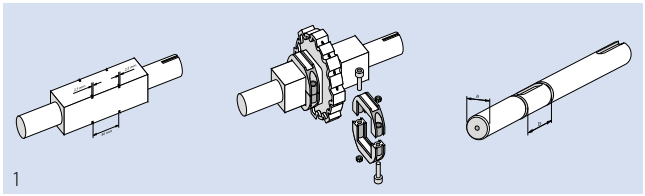
1

Belt tracking by sprockets
When using sprockets for tracking the centermost sprocket must be securely locked to the shaft by retainer rings, Seeger circlip rings or similiar (1).

Only lock and secure the center sprockets on the shafts. All other sprockets must be allowed to move freely on the shaft to accommodate variations in the belt width if changes in operating temperature occur (2).

By locking the centermost sprocket equal distribution of belt width expansion and contraction is ensured.

When installing sprockets for belts with profiles an side guards, do not position sprockets directly underneath the side guards.

For the required number of sprockets please see chart in chapter 3.2.

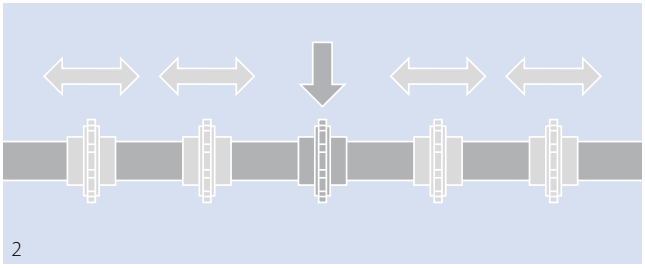
2

Sprocket alignment
Make sure all sprocket teeth are aligned when installing the sprockets (3). Failure to do so will prevent the sprockets from engaging correctly with the belt.

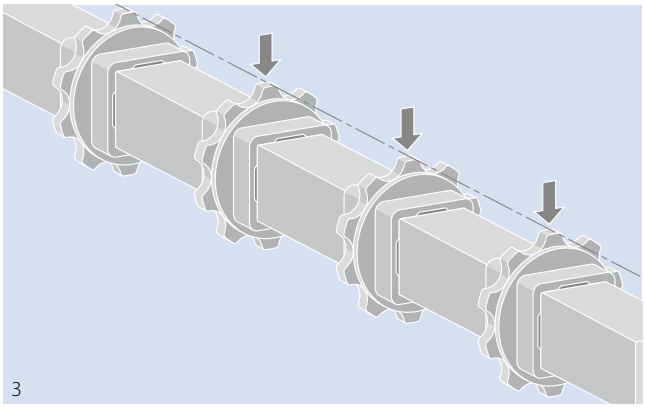
3

5.2 SPROCKET INSTALLATION

Belt tracking by side wearstrips (side-flexing belts)
When belts are guided by wearstrips mounted on the conveyour sidewalls, all sprockets must be allowed to move freely on the shaft.

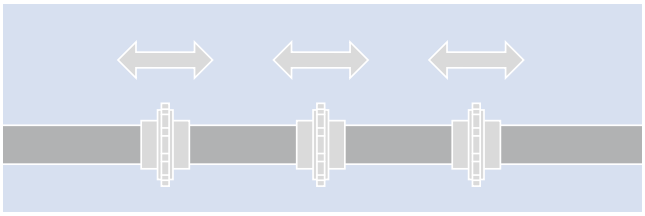

Sprocket engagement Series 5, 11, Combo (S5 ST/S11)
The teeth of the sprocket must engage into the mesh of the belt at the areas marked by the arrows.

For Series 5, the single-row sprockets must not be installed with the sprocket teeth engaging in the gap between side modules and center modules. The first sprocket should be positioned 62.5 mm from belt edge (see picture below).

By using G or RG tab modules, the tab can limit the sprocket position. Please check always the proper sprocket engagement into the mesh of the belt.

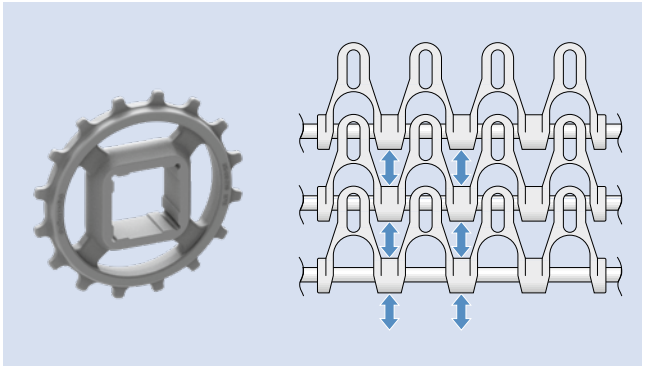

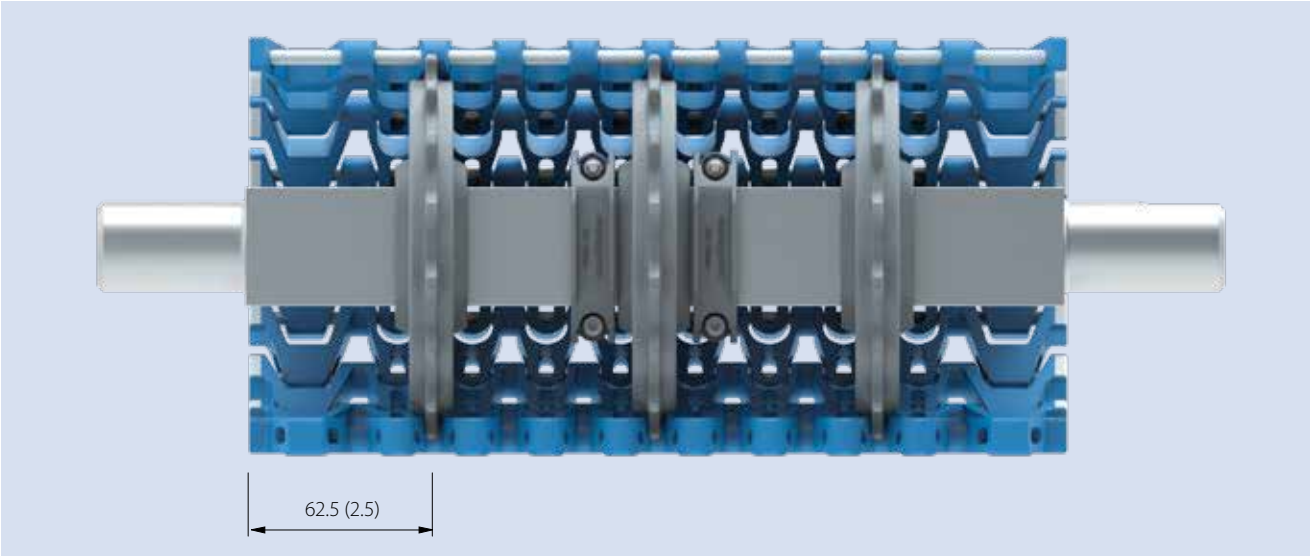

Sprocket positions and installation Series 11

Series 11 features a special concept where the load is distributed over the outermost hinges by moving the outermost sprocket 75 mm (2.95 in) from the belt edge. At the outermost part of the belt it is supported by idlers (sprocket without teeth) preventing the belt from deflecting at the transfer point.

Forbo Movement Systems recommends fixing the outer idlers on the shaft and preventing them from moving sideways by using retainer rings or other methods. As the belt is guided by the wearstrips, the sprockets should not be fixed and should be free to move sideways on the shaft.

Maximum distance between sprockets is 75 mm (2.95 in).

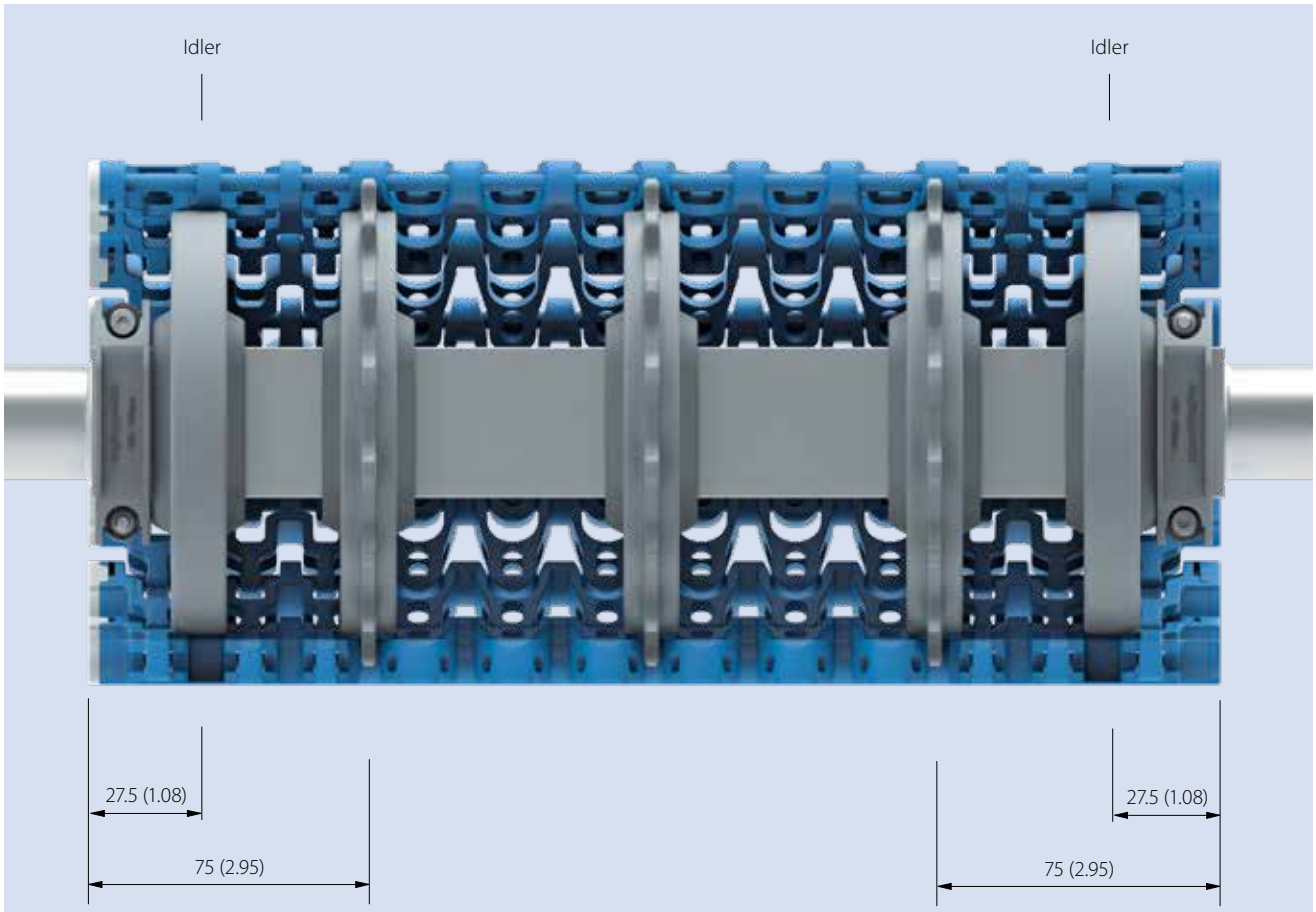

Dimensions in mm and inches (in).
All imperial dimensions (inches) are rounded off.

5.2 SPROCKET INSTALLATION

Tooth engagement and sprocket usage series 9.1 – Sprocket S9-Z11 SPR DR

The teeth on the double-row sprocket need to engage with the belt's grid top at the sections marked with arrows.

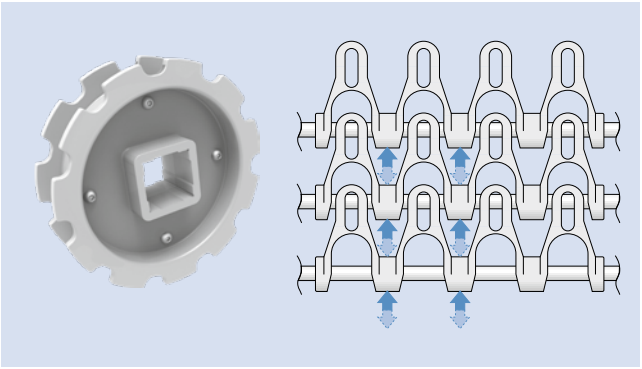

The S9-Z11 SPR DR sprocket was designed for use on straight and curved belts.
The preferred drive direction must be complied with (see figure and table below).
We don't recommend usage in spiral towers with cage drives.
Distance of the first sprocket from the belt edge: 175 mm (6.9 in) – see figure.

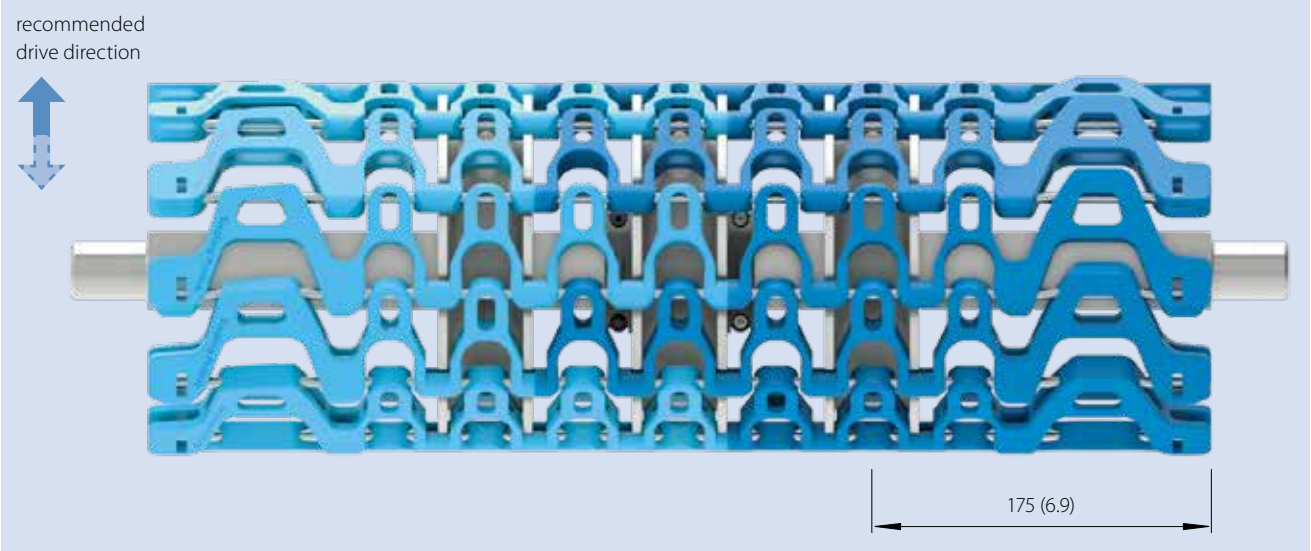

Recommended usage

Belt	Application	Recommended usage
S9.1-57 GRT	Straight/curved	Use in main conveying direction, only for a short time in the opposite direction and not under load
S9.1-57 GRT	Spiral tower with cage drive	This sprocket is not recommended for series 9.1

Tooth engagement and sprocket usage series 9.1 – Sprocket S9.1-10 SPR

The teeth on the single-row sprocket need to engage with the belt's grid top at the sections marked with arrows.

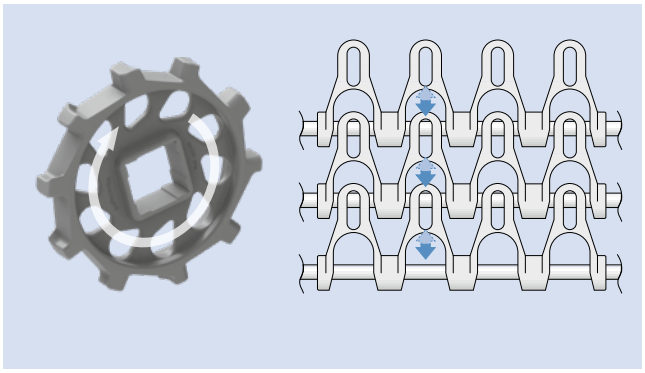

The S9.1-10 SPR sprocket was designed for use in spiral towers with cage drives.
The preferred drive direction must be complied with (see figure and table below).
We don't recommend using it on straight and curved sections.
Distance of the first sprocket from the belt edge: 125 mm (4.9 in) – see figure.

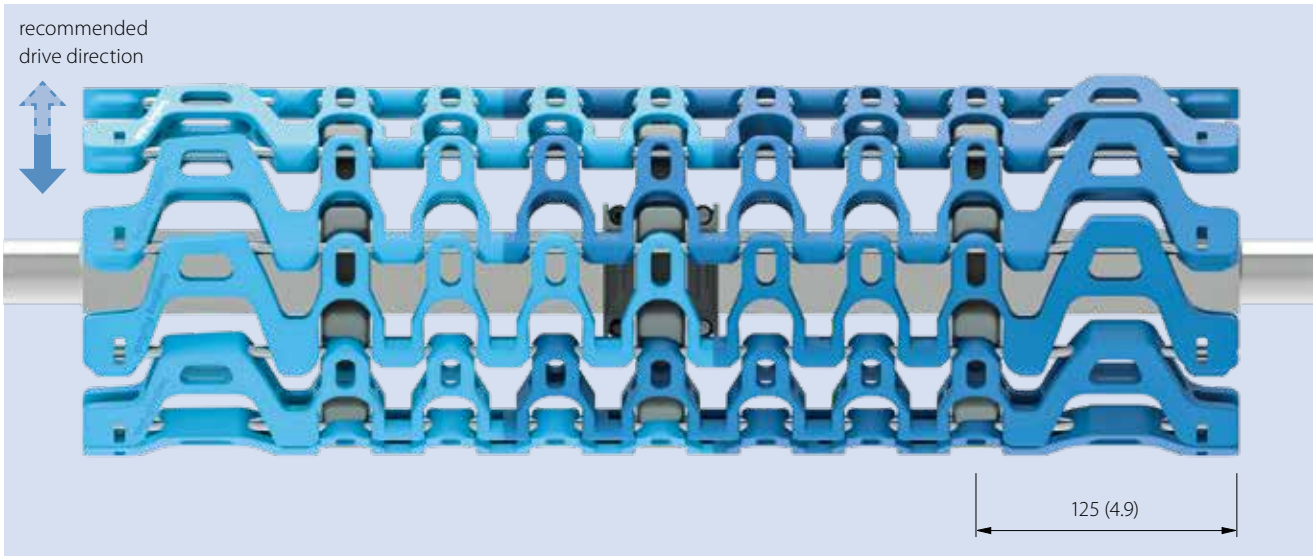

Recommended usage

Belt	Application	Recommended usage
S9.1-57 GRT	Straight/curved	This sprocket is not recommended for series 9.1
S9.1-57 GRT	Spiral tower with cage drive	Use in main conveying direction, only for a short time in the opposite direction and not under load

5.2 SPROCKET INSTALLATION

Sprocket engagement Series 18
Two row sprocket for bi-directional drive.
The sprocket should press to the eyelet for required drive direction.

By using G tab modules, the tab can limit the sprocket position. Please check always the proper sprocket engagement into the mesh of the belt.

Our recommendation is to place the first sprocket as close as possible to the belt edge. The below illustration shows the minimal sprocket distance in relation to the used outside modules (collapse factor 2.2 or 1.7).
S18 Combo belt is a combination of both types.

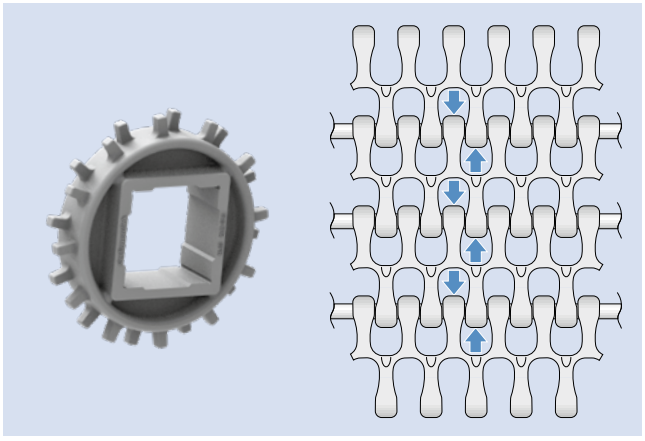

S18-44 2.2

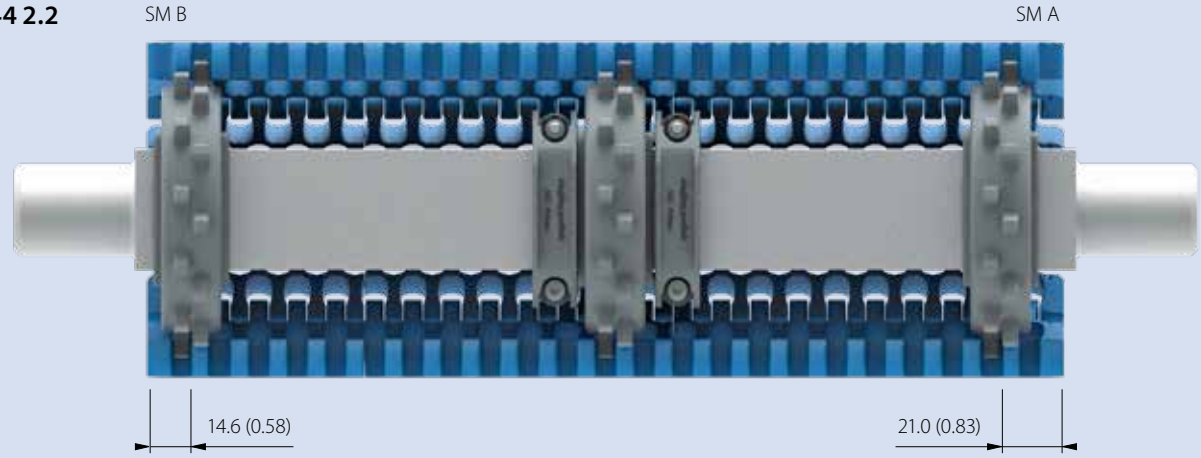

S18-44 1.7

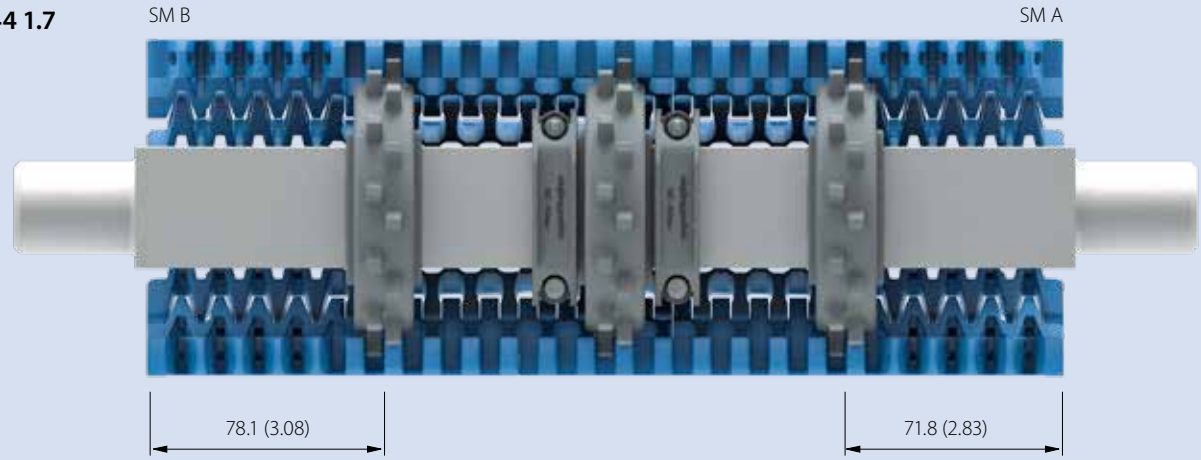

5.3 WEARSTRIP ARRANGEMENT CURVE BELTS

Belt support, guiding, tracking
The belt is pressed onto the inner radius in curved sections. Lateral wearstrips need to be installed to cover the pressure. We recommend guiding the belt along the conveyor by lateral wearstrips, which means that the middle sprocket must not be fixed axially. All sprockets can float on the shaft. The belt is guided by the lateral wearstrips only.

The key criterion for a successful side-flex conveyor are to ensure and maintain the correct distances between the outer parallel wearstrips in curved and straight segments. The distance between the outer wearstrips is especially important. The wider the belts the greater the effort required to keep the exact distances through the whole running track of the belt (both on the carry and the return-way).

Belt lift
In some cases the belt tends to lift up at the outer edge. The risk of that increases with higher belt pull, smaller inner radius, higher speed and higher curve angle. To avoid this, wearstrips on top of the edge are to be installed. Forbo Movement Systems offers also belts with guided side modules or Hold Down Tabs if required.

Preventing belt lift (Series 11)
If the center supports are positioned above the outmost support, the belt may form a slight convex surface with the highest point in the middle (red line below). On heavily loaded conveyors this may lead to the belt lifting out of the guides. It is therefore vital to ensure that the center supports are level with or lower than the outermost belt supports. To prevent any peak loads from forcing the belt out of the guides, Forbo Movement Systems recommends positioning the center supports 1 – 3 mm (0.04 – 0.12 in) below the outer support surfaces.
This ensures that the belt will be pushed towards the center support (green line below) and not be pushed up and out of the guides.

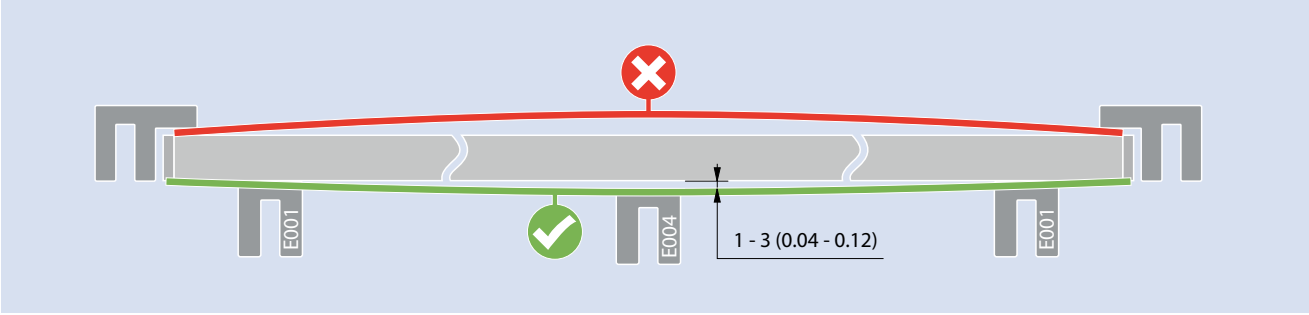

Series 5 and 9 are assembled with steel pins causing a higher stiffness. This reduces the tendency to belt lift in the first place and secondly makes the belt much more laterally stiff such that a lower positioned center wearstrip would not lead to a bow downwards but rather leave space between the wearstrip and belt.

Recommended wearstrip arrangement for Series 5/Series 9/Series 9.1

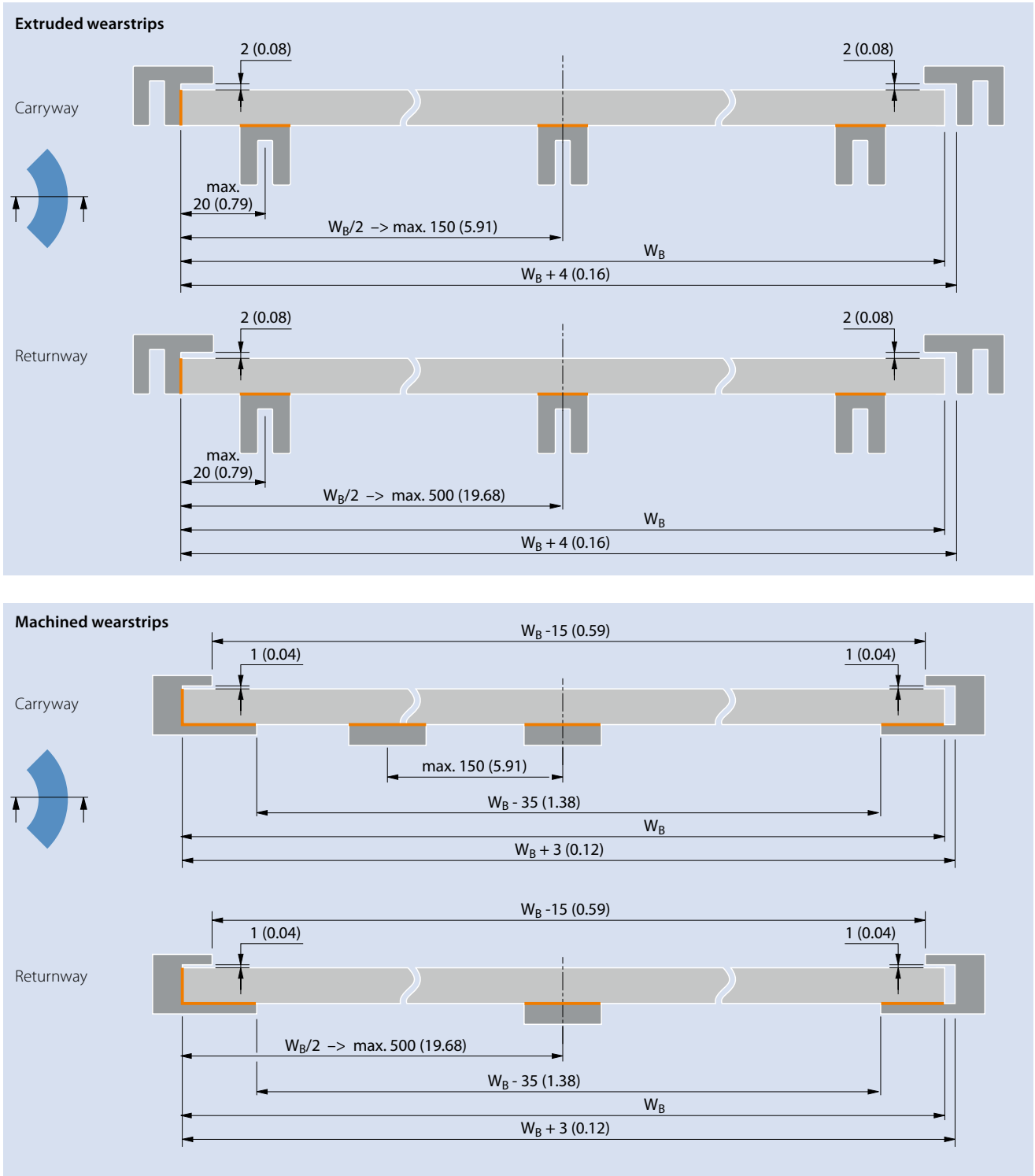

Dimensions in mm and inches (in). All imperial dimensions (inches) are rounded off.
Contact areas in orange.

5.3 WEARSTRIP ARRANGEMENT CURVE BELTS

Recommended wearstrip arrangement for Series 5/Series 9 belts with guided side modules

Hold Down guides are used to prevent belt lift and allow two neighboring belts to run parallel with minimum gap. Using Hold Down guides can also allow for products to extend beyond the belt width or to transfer perpendicular to travel direction as no wearstrip extends above the belt surface.
In general, it is recommended that the radial force be absorbed by the wear strip on the inner radius.

Extruded wearstrips

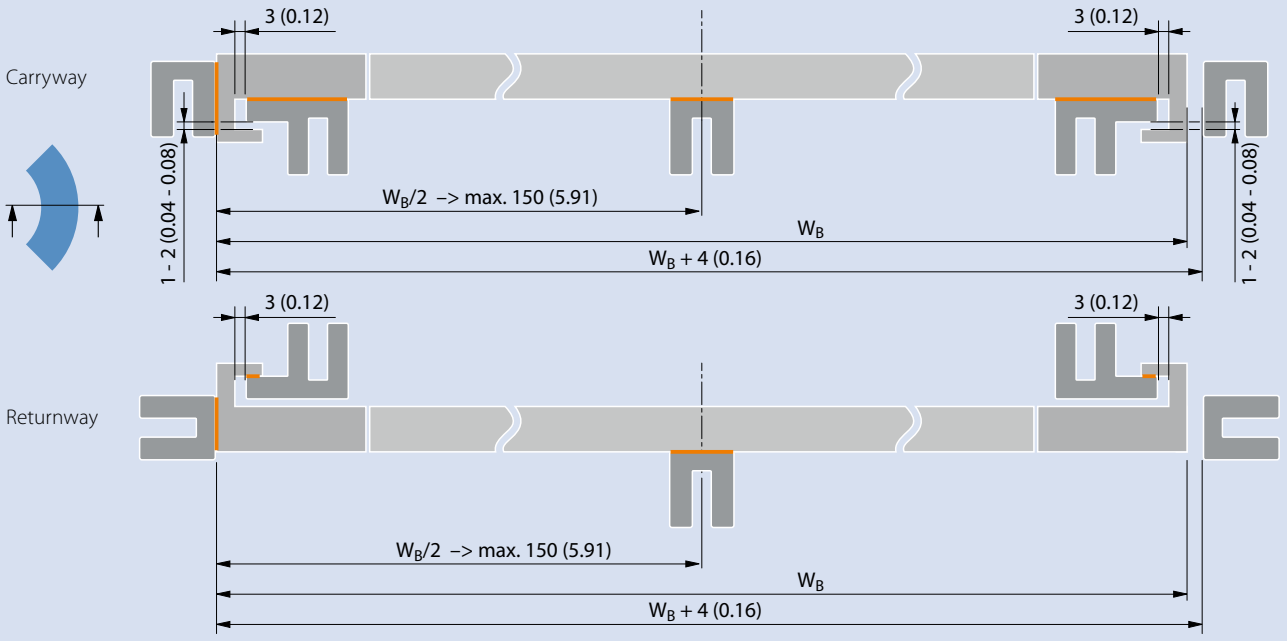

Machined wearstrips

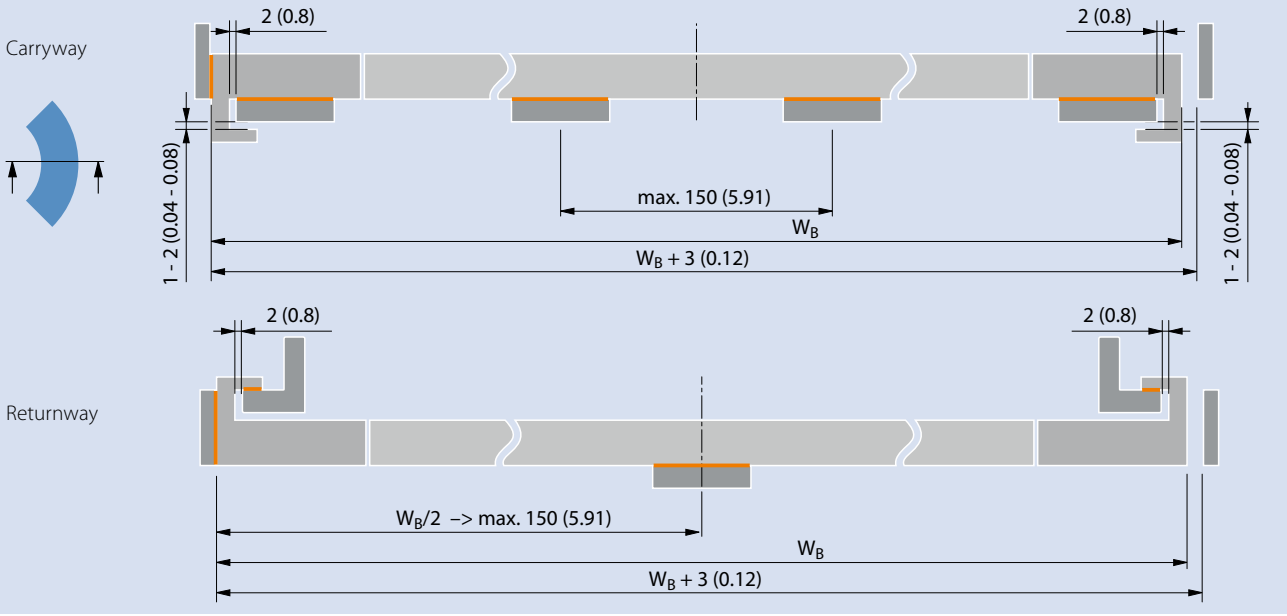

Dimensions in mm and inches (in). All imperial dimensions (inches) are rounded off.
Contact areas in orange.

For a smooth run, especially for high curve radius compared to collapse factor (C_c) of the belt, a support at the outside G-tab is possible.

- only for POM-CR edge modules
- belt strength curve ≤ 60 % of nominal belt strength
- belt speed < 30 m/min

Extruded wearstrips

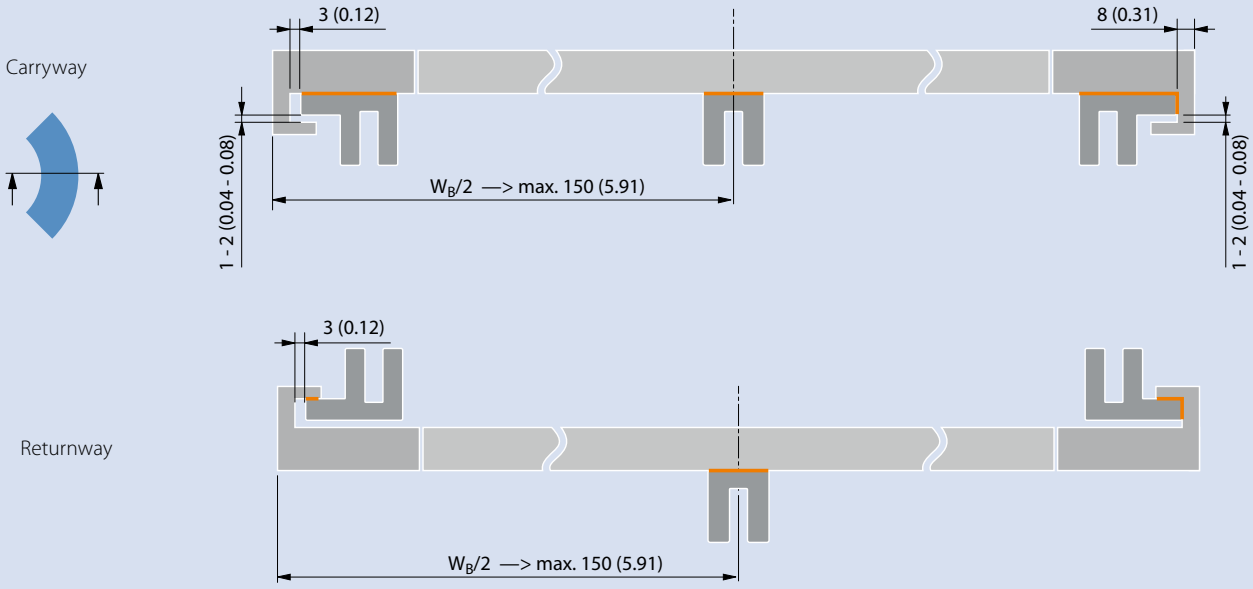

Machined wearstrips

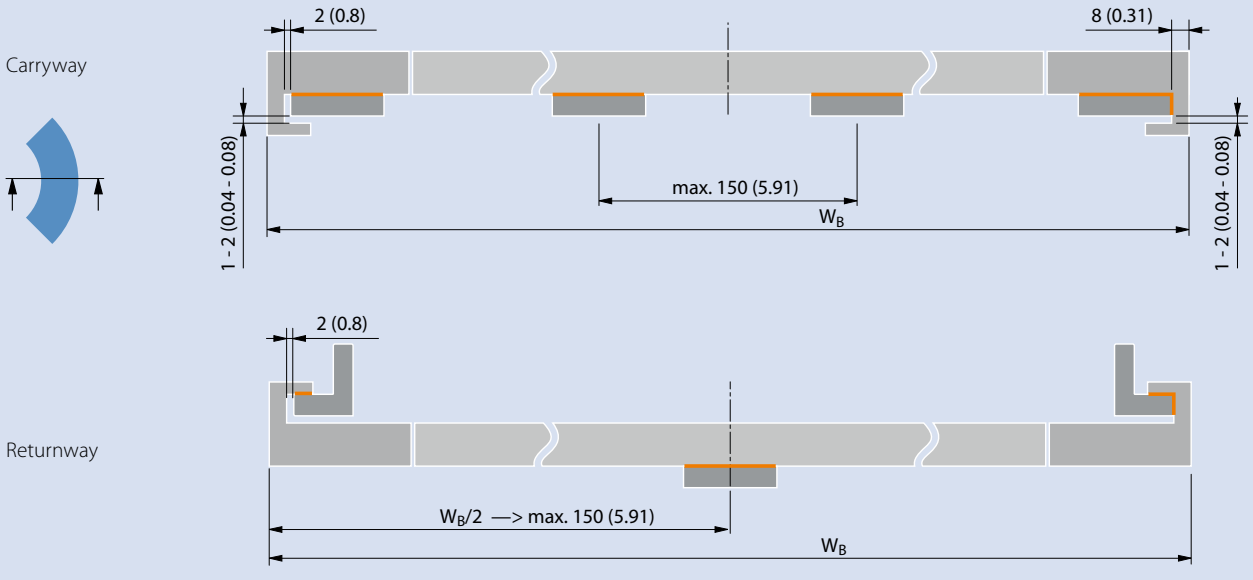

5.3 WEARSTRIP ARRANGEMENT CURVE BELTS

Recommended wearstrip arrangement for Series 5 belts with reverse guided side modules

Extruded wearstrips

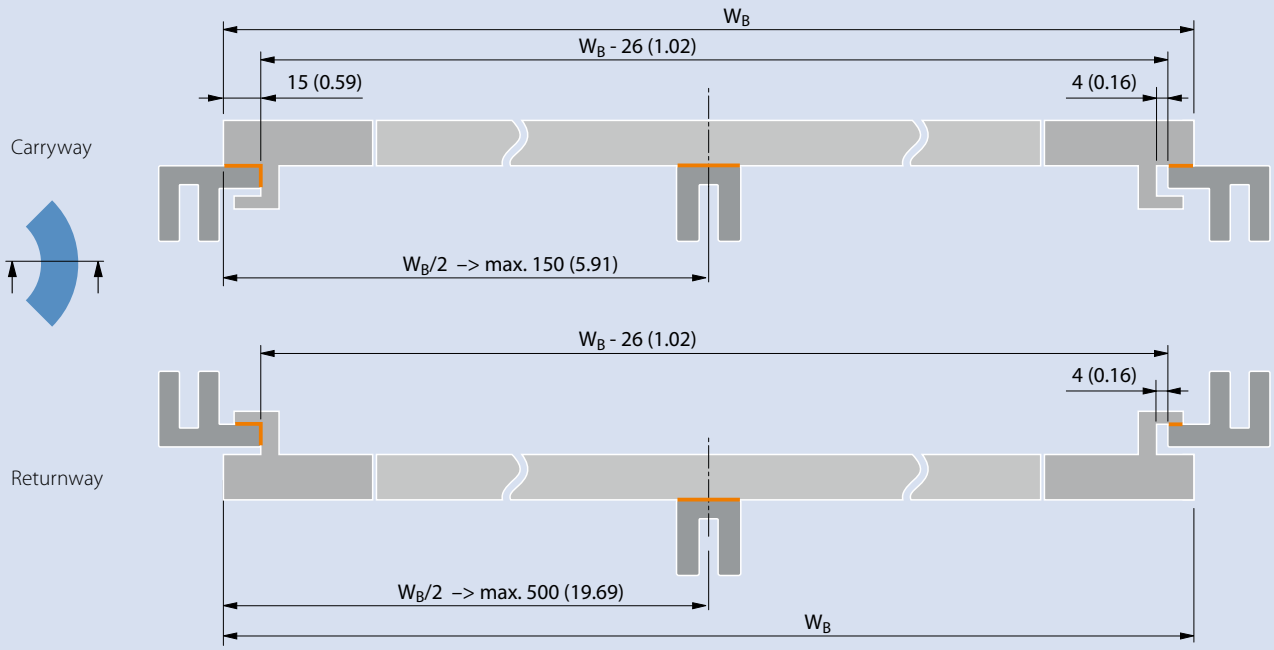

Machined wearstrips

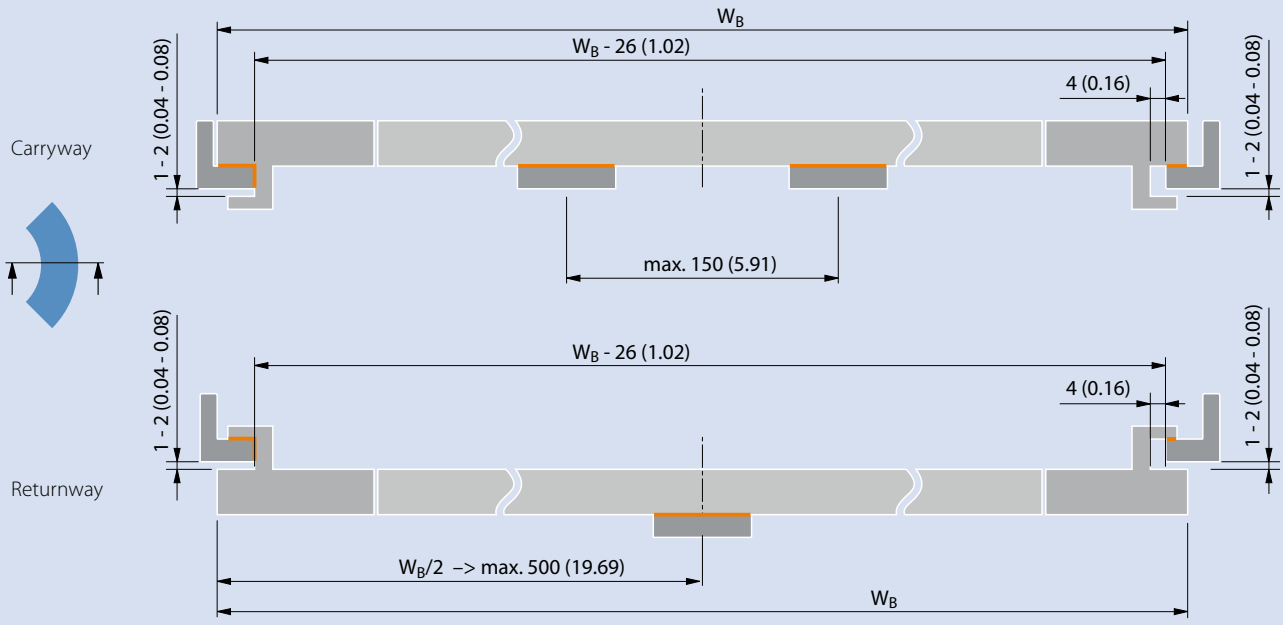

Dimensions in mm and inches (in). All imperial dimensions (inches) are rounded off.
Contact areas in orange.

For a smooth run, especially for high curve radius compared to collapse factor (C_c) of the belt, a support at the outside RG-tab is possible.

– only for POM-CR edge modules

– belt strength curve ≤ 60 % of nominal belt strength

– belt speed < 30 m/min

Extruded wearstrips

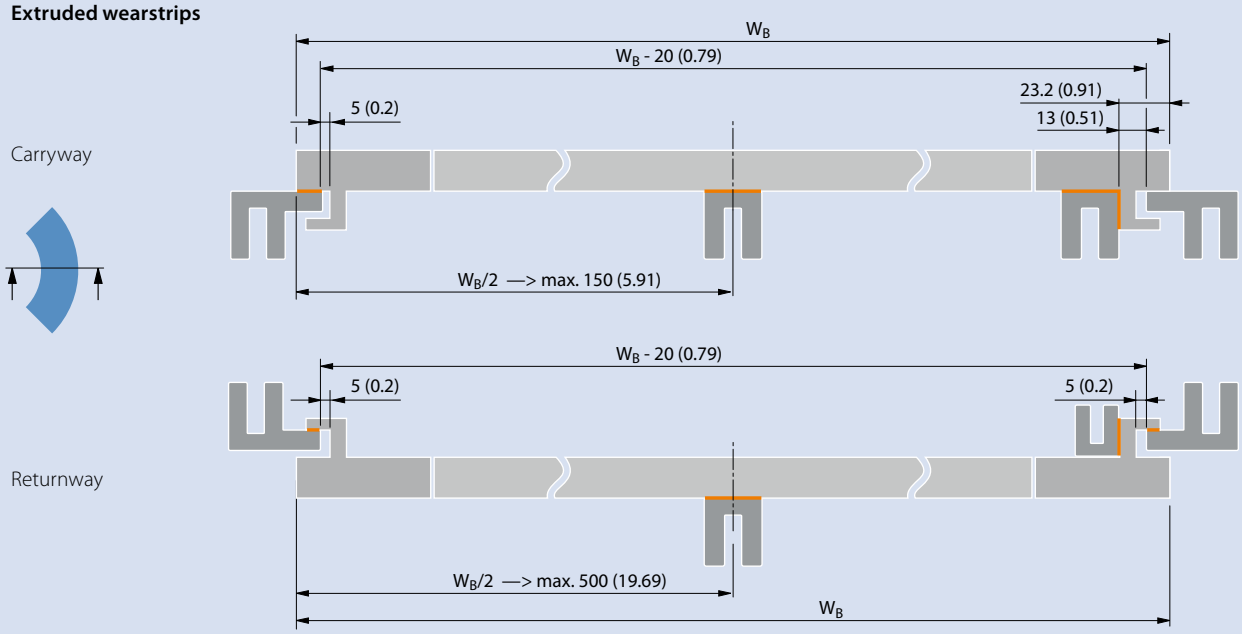

Machined wearstrips

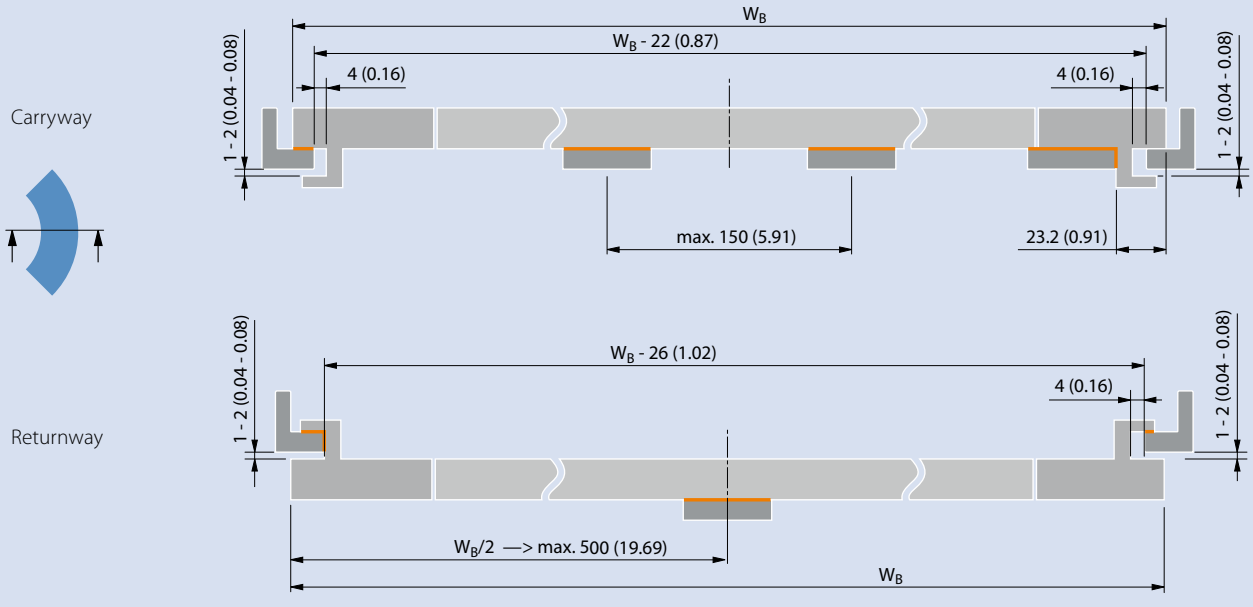

Dimensions in mm and inches (in). All imperial dimensions (inches) are rounded off.
Contact areas in orange.

5.3 WEARSTRIP ARRANGEMENT CURVE BELTS

Recommended wearstrip arrangement for multiple parallel Series 5 belts with reverse guided side modules

Extruded wearstrips

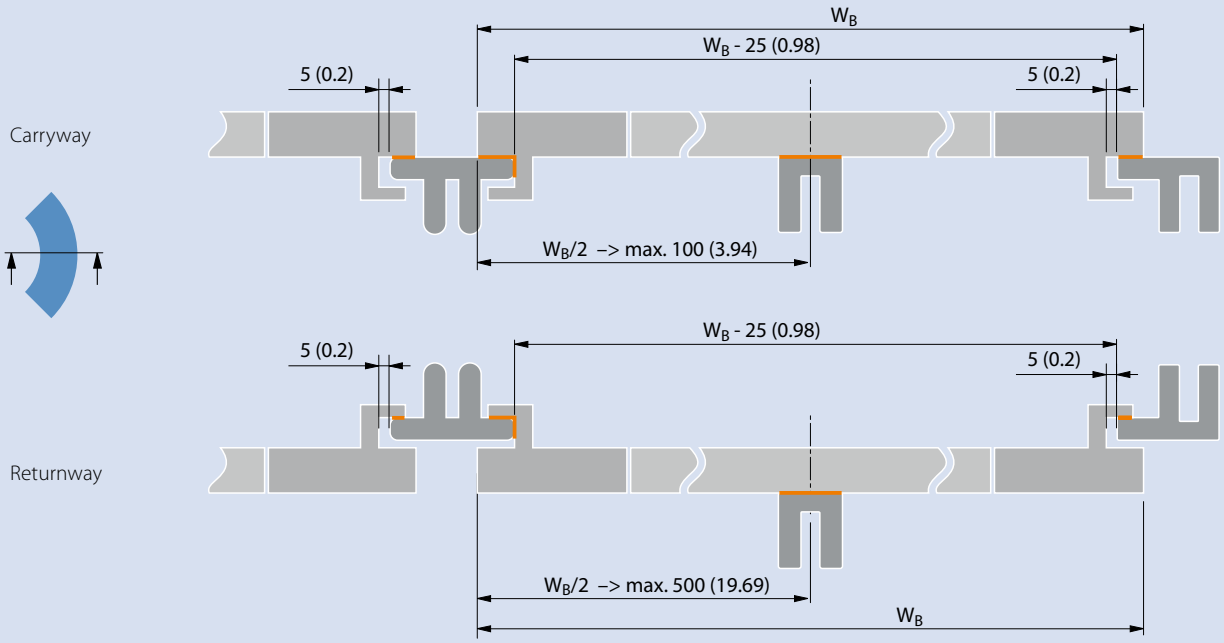

Machined wearstrips

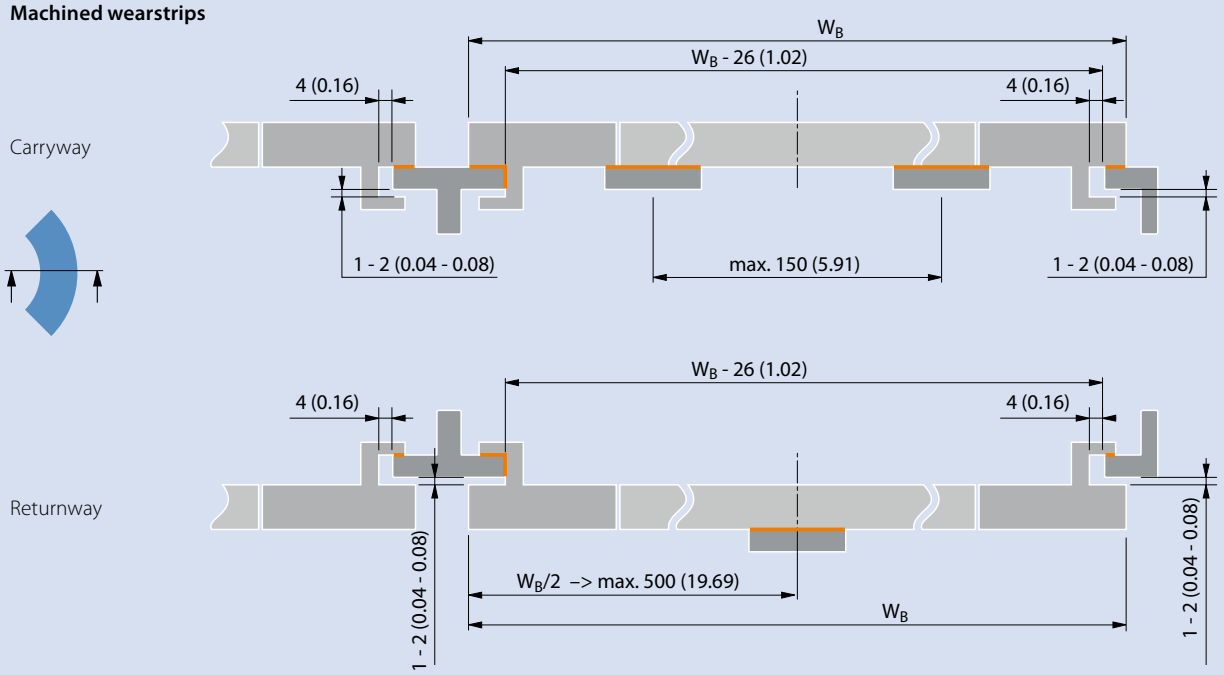

Dimensions in mm and inches (in). All imperial dimensions (inches) are rounded off.
Contact areas in orange.

Special conditions for Series 5 variant S5-45 GRT BT

The following illustrations show the recommended critical dimensions

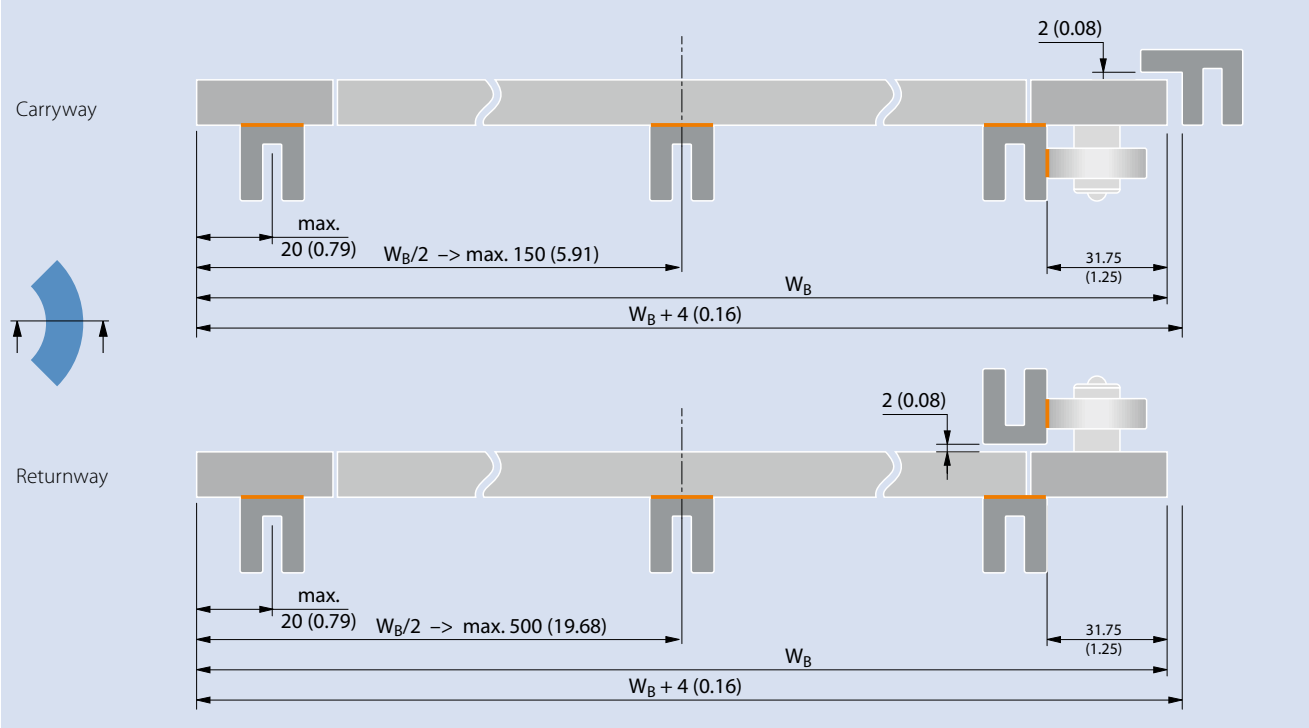

Dimensions in mm and inches (in). All imperial dimensions (inches) are rounded off.
Contact areas in orange.

5.3 WEARSTRIP ARRANGEMENT CURVE BELTS

Recommended wearstrip arrangement for Series 11 with caps

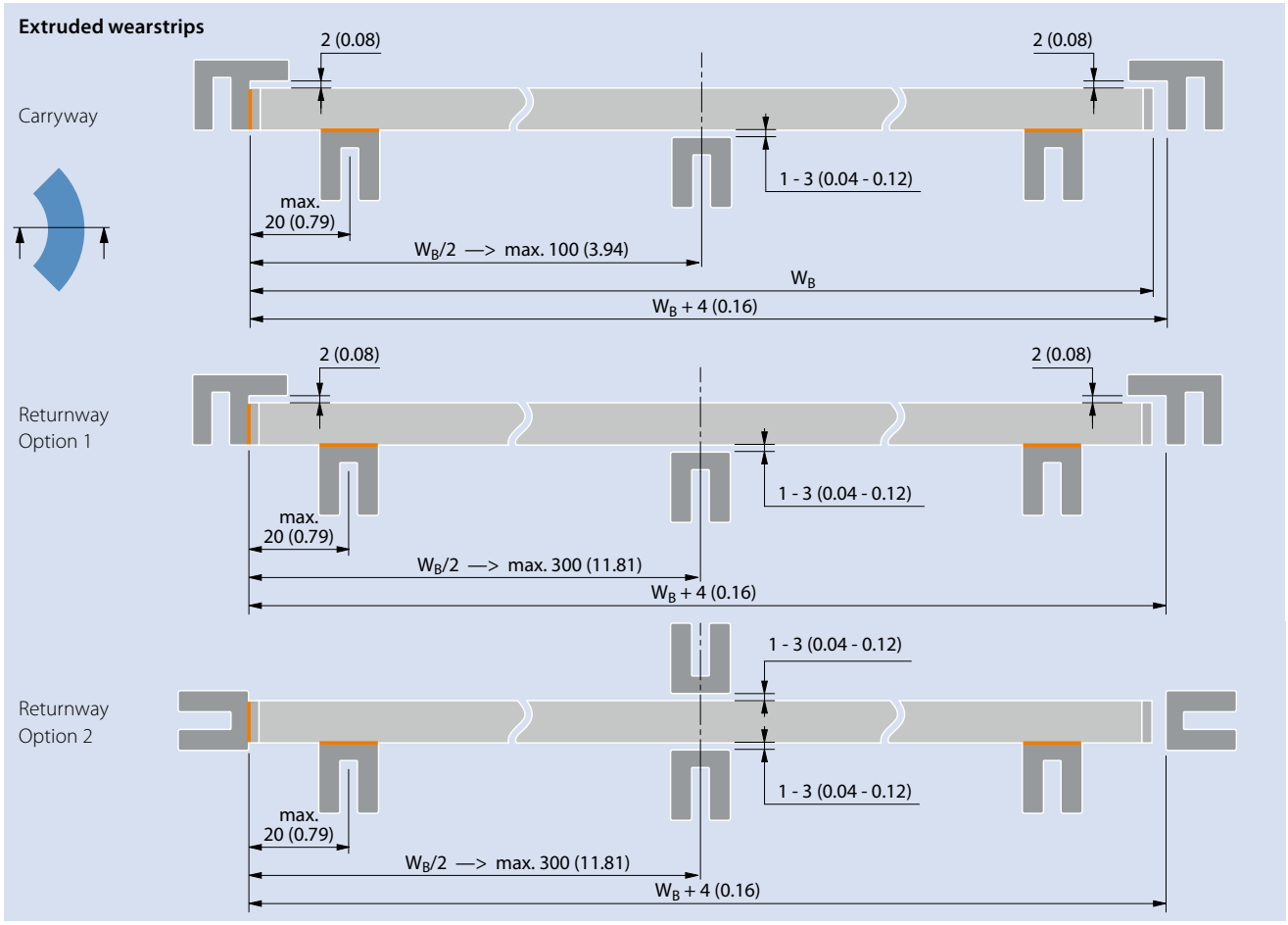

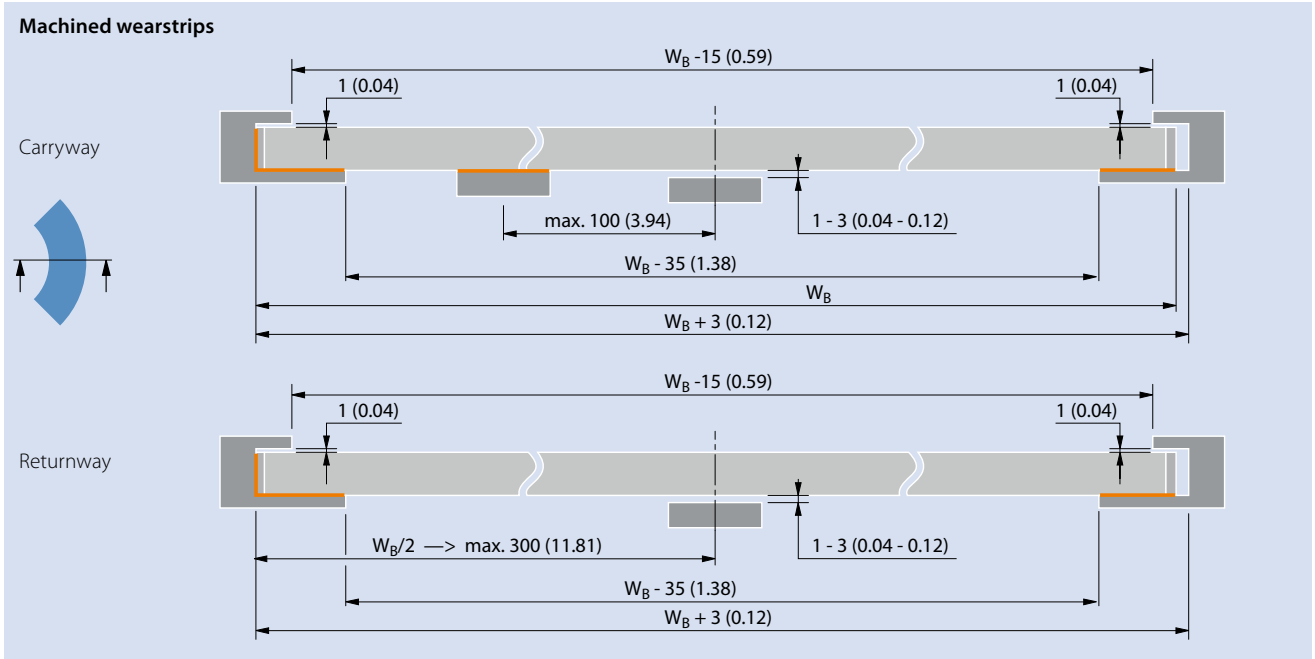

Recommended wearstrip arrangement for Series 11 with Hold Down caps

Extruded wearstrips

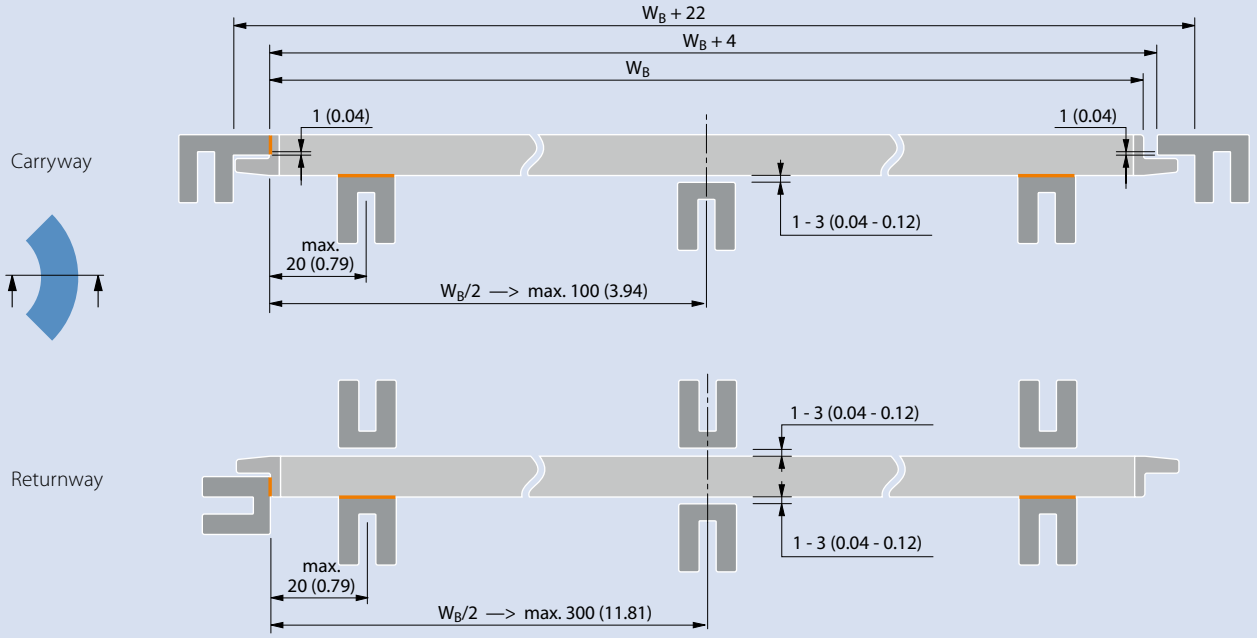

Machined wearstrips

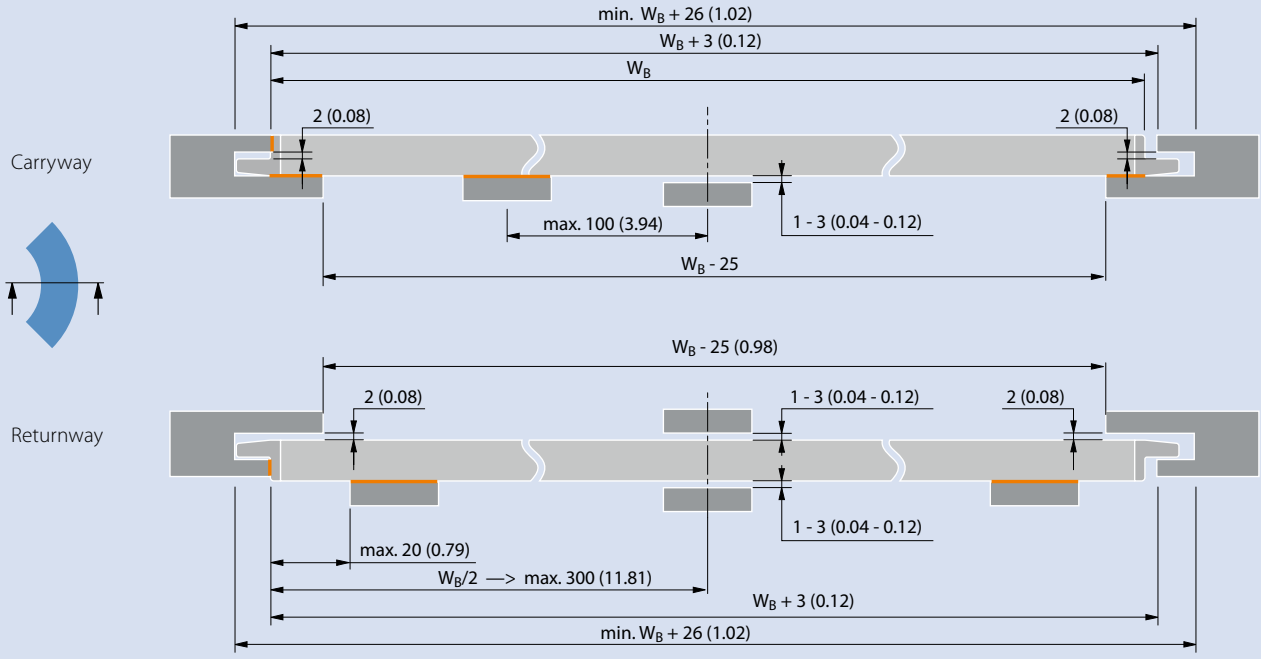

Dimensions in mm and inches (in). All imperial dimensions (inches) are rounded off.
Contact areas in orange.

5.3 WEARSTRIP ARRANGEMENT CURVE BELTS

Recommended wearstrip arrangement for Series 18 variant S18-44 GRT

Extruded wearstrips

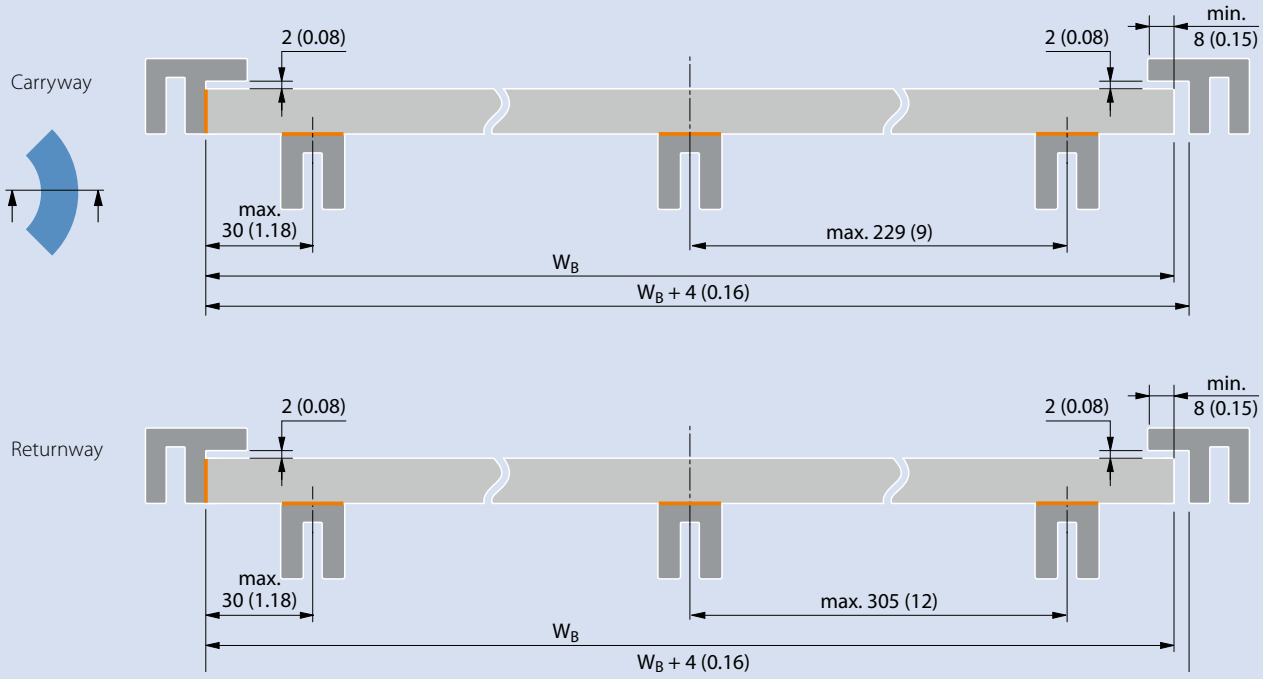

Machined wearstrips

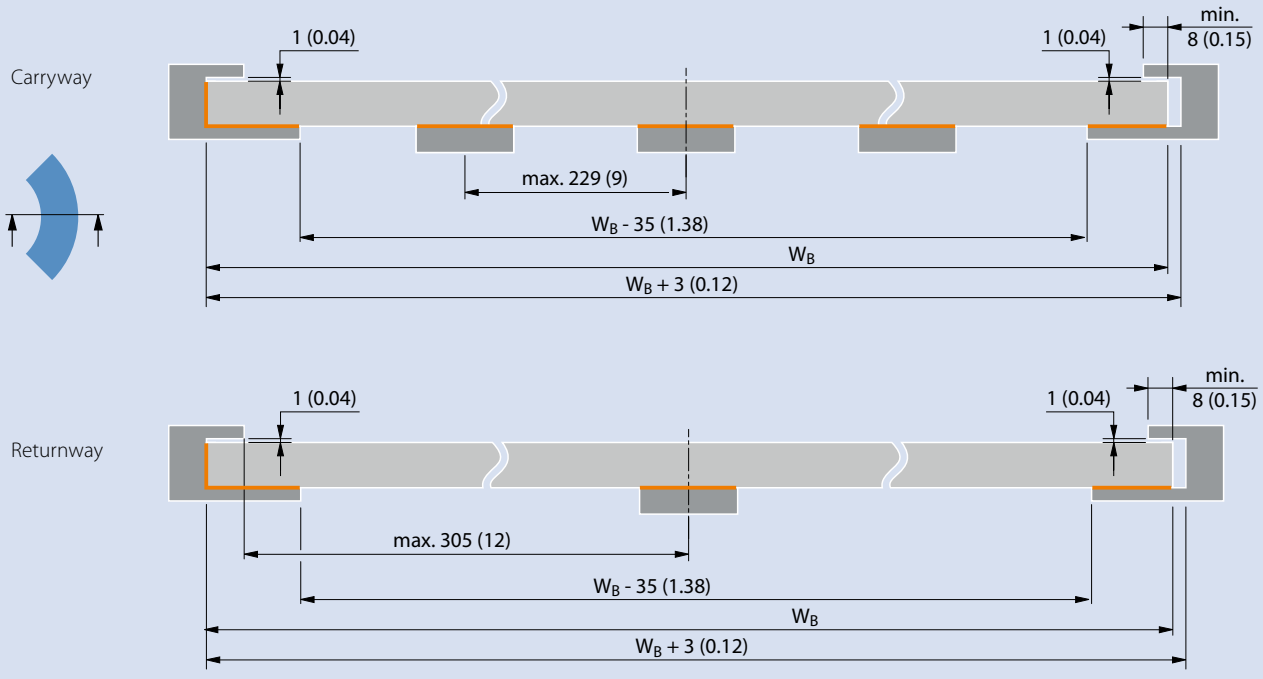

Dimensions in mm and inches (in). All imperial dimensions (inches) are rounded off.
Contact areas in orange.

Recommended wearstrip arrangement for Series 18 variant S18-44 GRT G

Extruded wearstrips

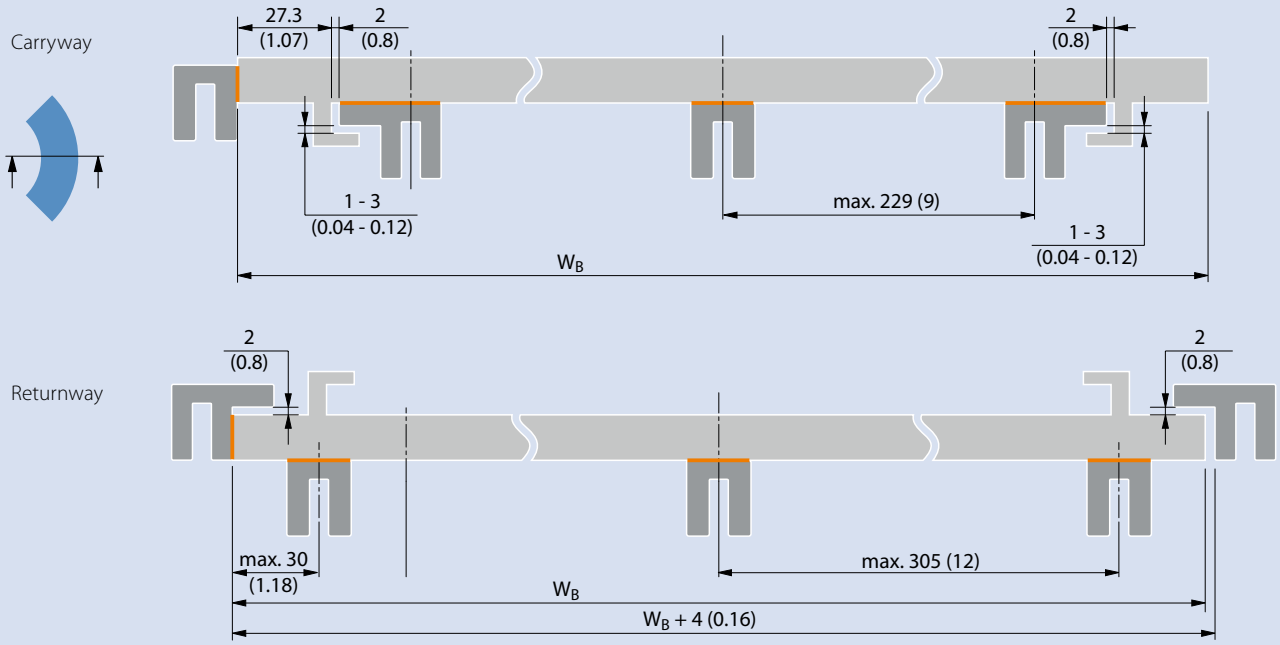

Machined wearstrips

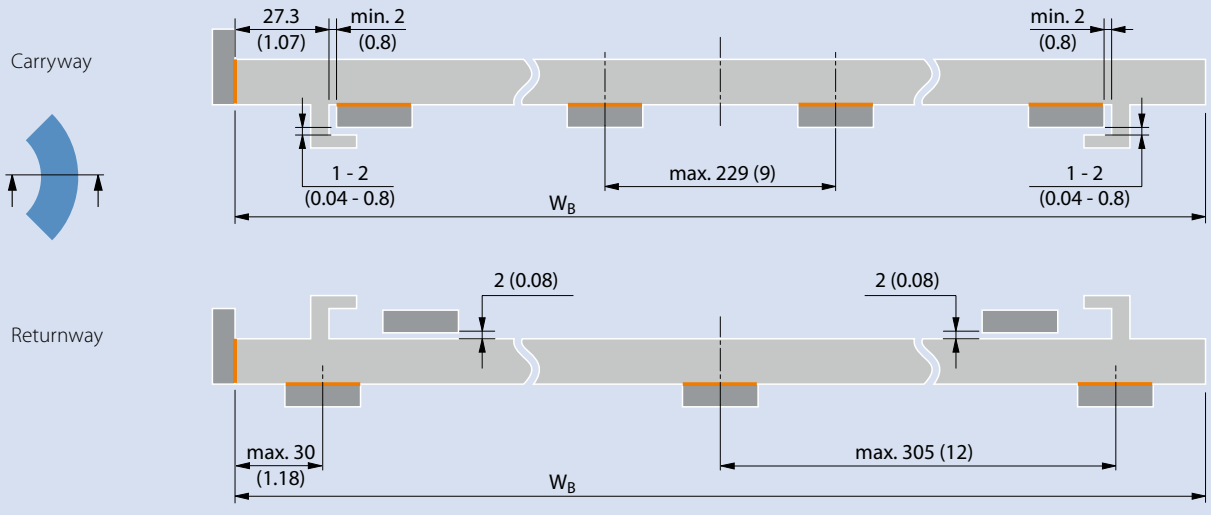

Dimensions in mm and inches (in). All imperial dimensions (inches) are rounded off.
Contact areas in orange.

5.3 WEARSTRIP ARRANGEMENT CURVE BELTS

For a smooth run, especially for high curve radius compared to collapse factor (C_c) of the belt, a support at the outside G-tab is possible.

– only recommended for POM and PA belts

– nominal belt pull, curve ≤ 1000 N

Extruded wearstrips

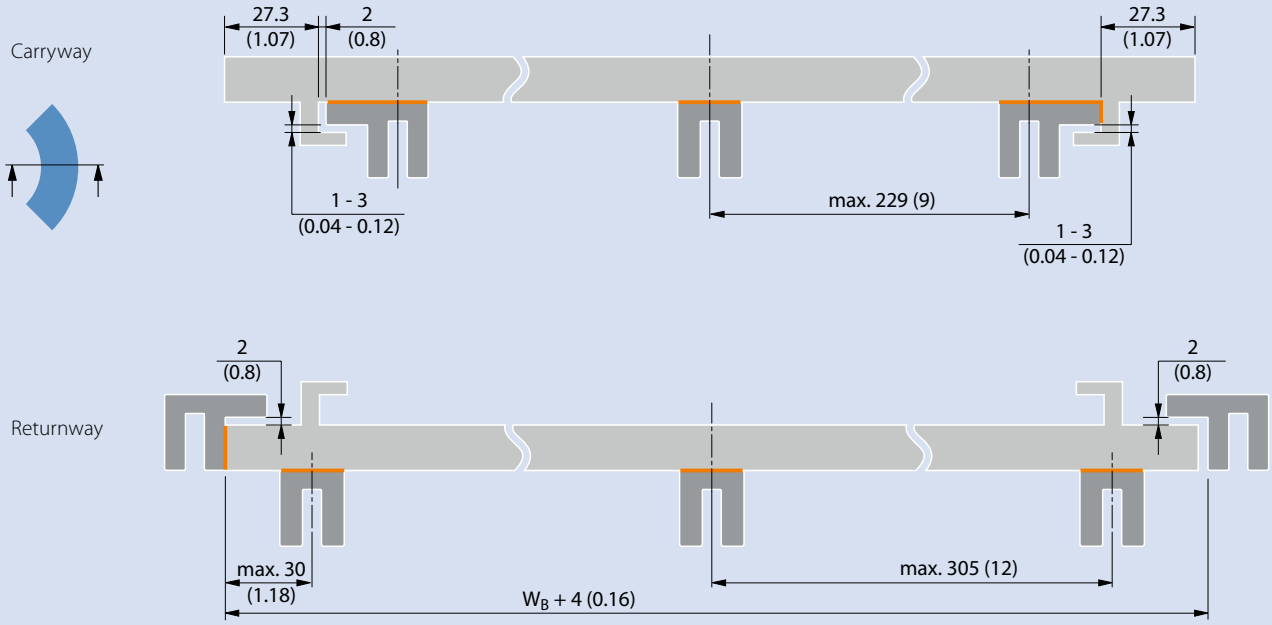

Machined wearstrips

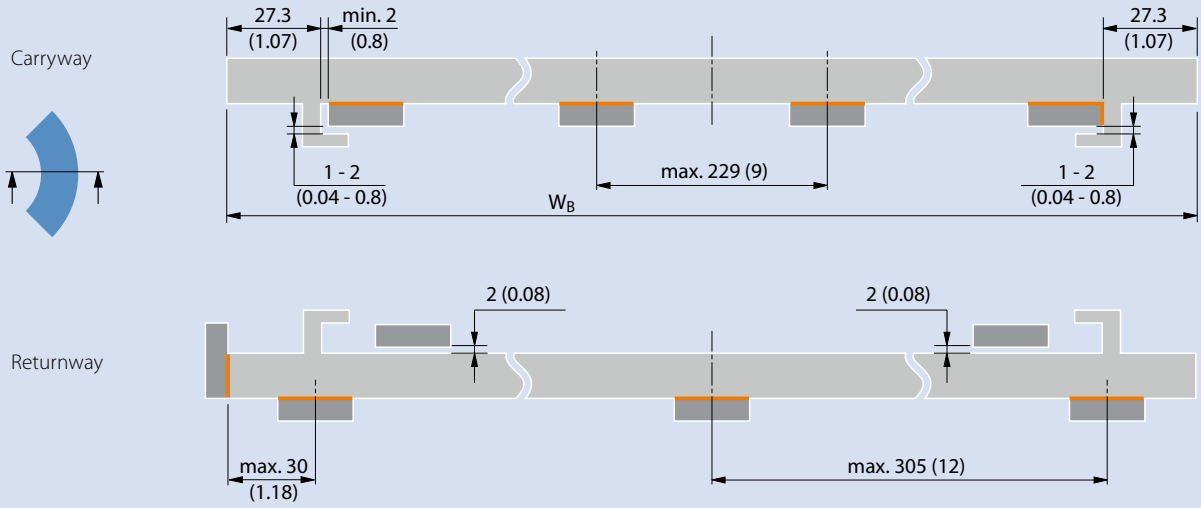

Dimensions in mm and inches (in). All imperial dimensions (inches) are rounded off.
Contact areas in orange.

Recommended wearstrip arrangement for Series 18 variant S18-44 HDK

Extruded wearstrips

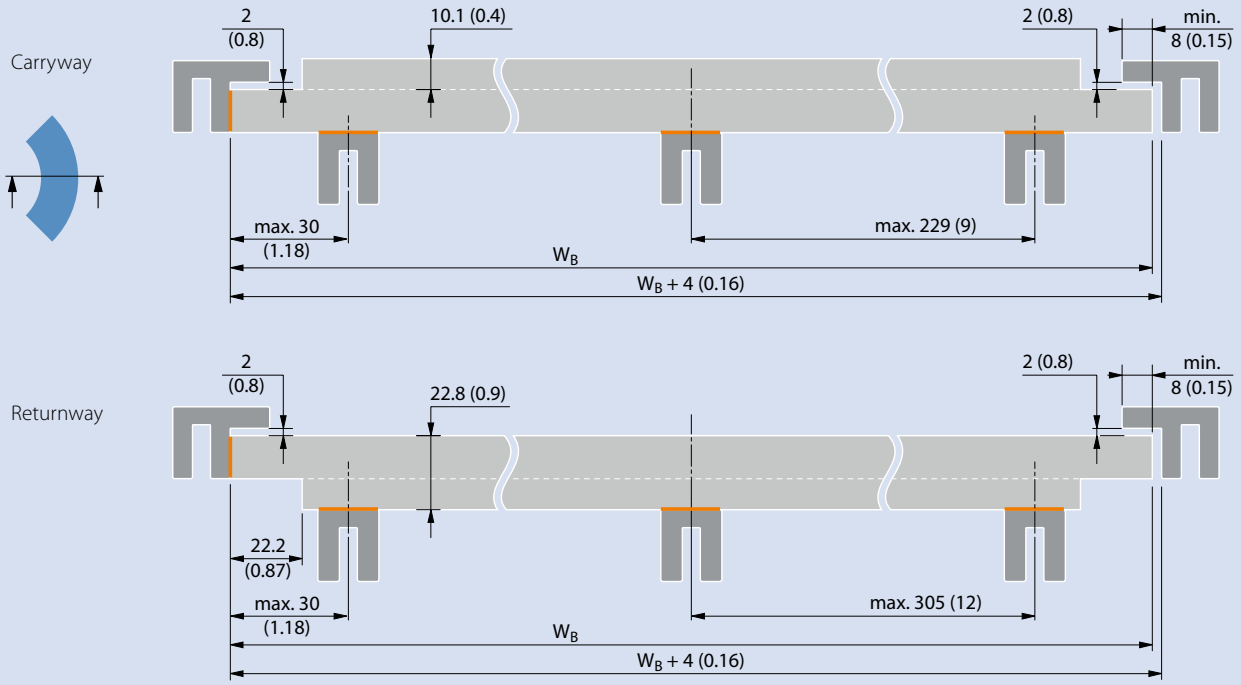

Machined wearstrips

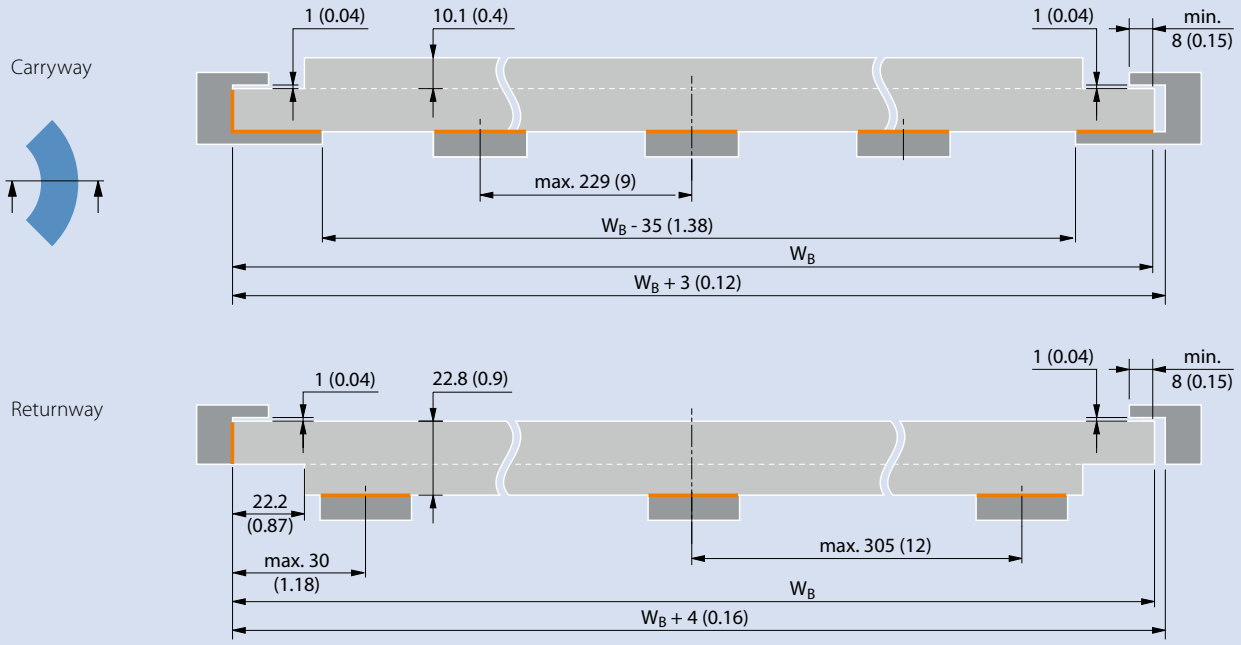

Dimensions in mm and inches (in). All imperial dimensions (inches) are rounded off.
Contact areas in orange.

5.4 JOINING BELT SECTIONS

Installing and removing hinge pins

Depending on the series, Siegling Prolink Modular Belts utilize hinge pins with heads and locking collars or with locking collars only. Series 5 and Series 9 belts in radius belt applications utilize stainless steel pins with machined grooves.

If the belt is wider than the longest molded pin, it is either assembled with two molded pins per row, or if the belt is more than twice the width of the longest pin, with three pins per row. In case of the latter, an extruded head-less and collar-less pin is floating between two pins with molded heads and/or locking collars.

For instructions on how to install and remove hinge pins, please refer to the specific belts series shown in the illustrations below.

Series 1, 2, 4.1, 8

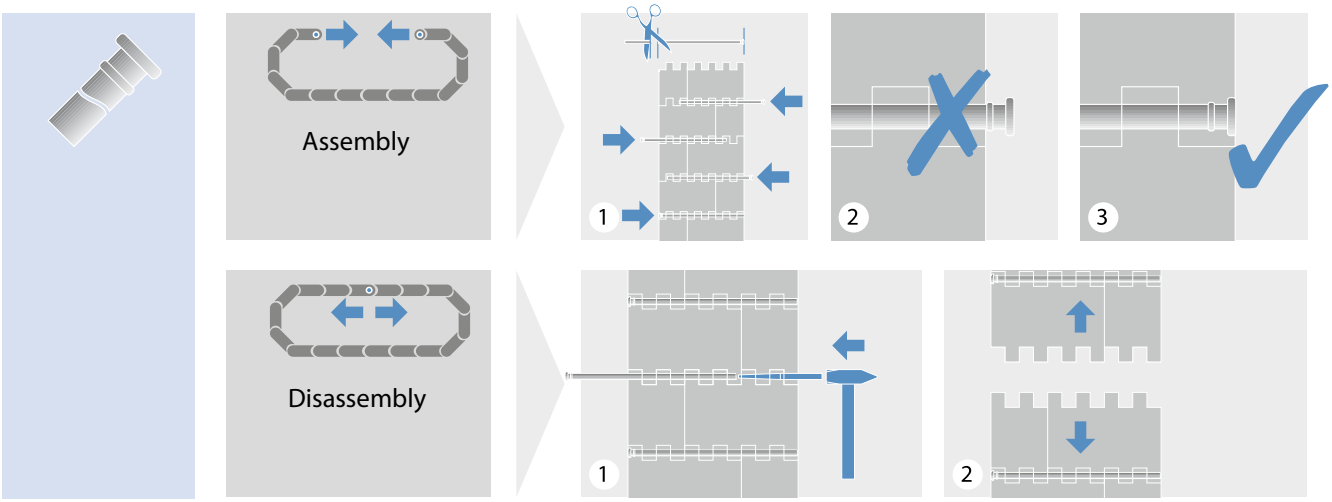

Series 5

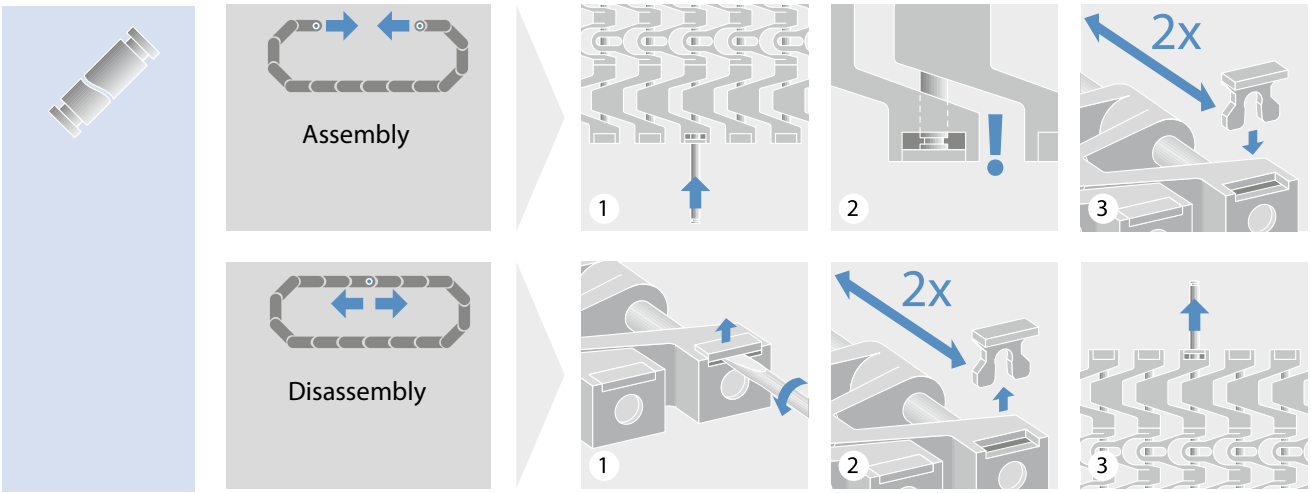

Series 5 ST



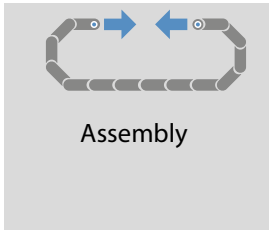

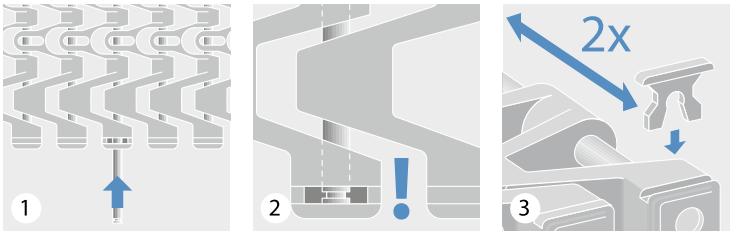

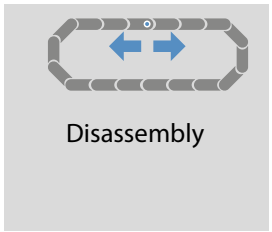

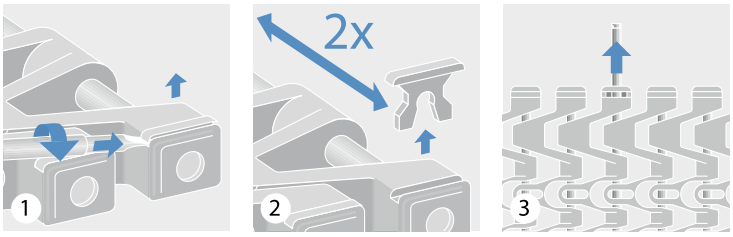

Combo belts (S5 ST and S11)



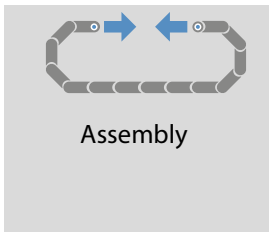

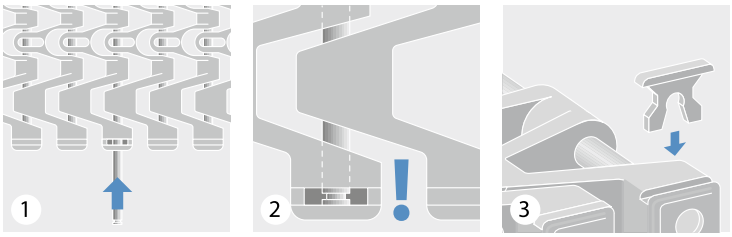

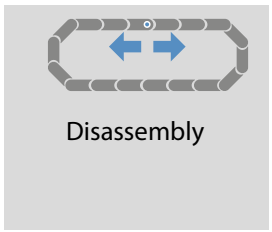

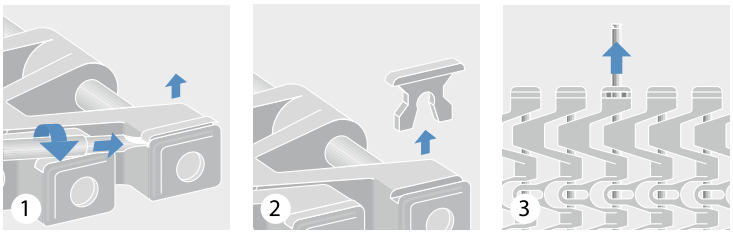

Series 6.1, 10



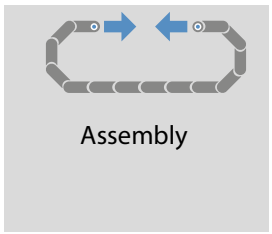

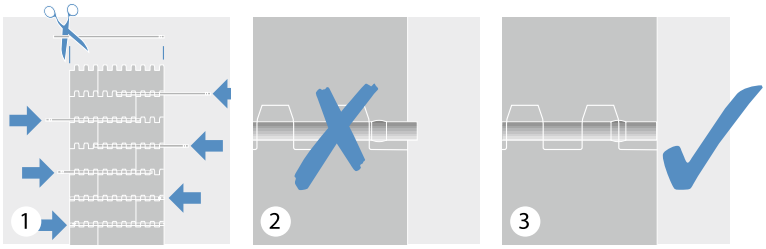

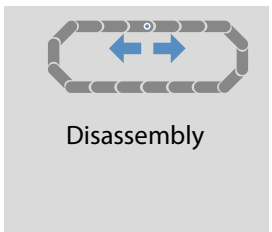

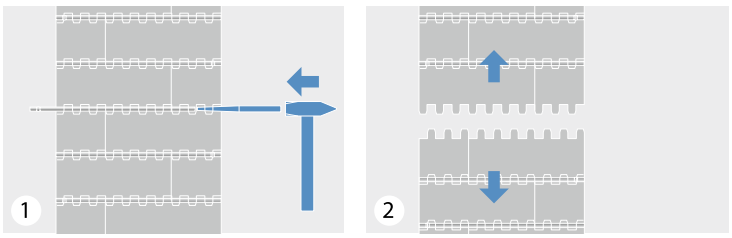

5.4 JOINING BELT SECTIONS

Series 7

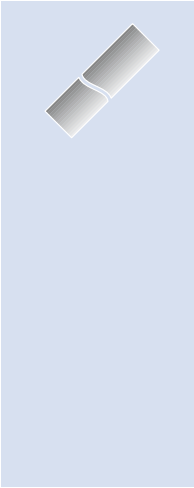

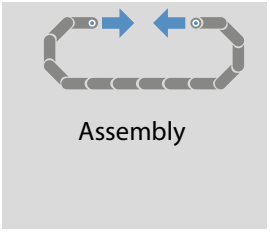

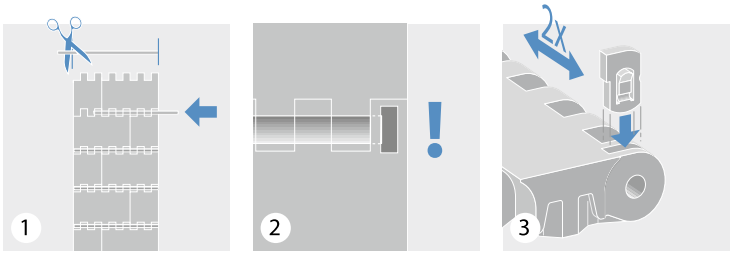

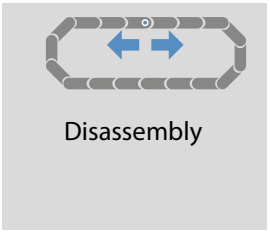

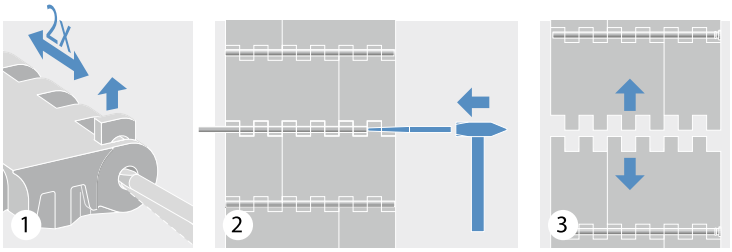

Series 9

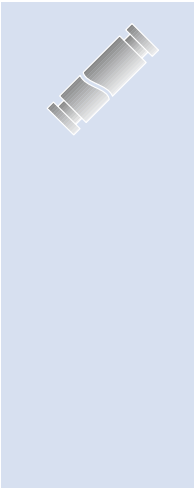

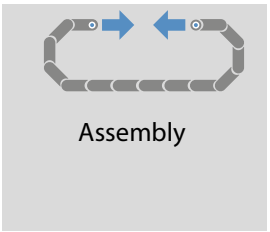

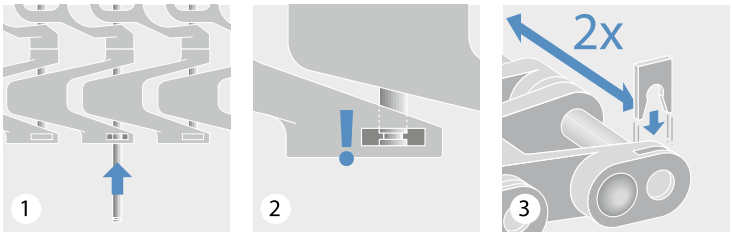

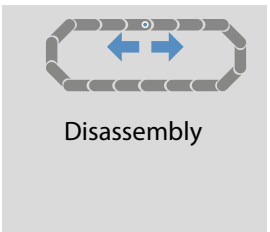

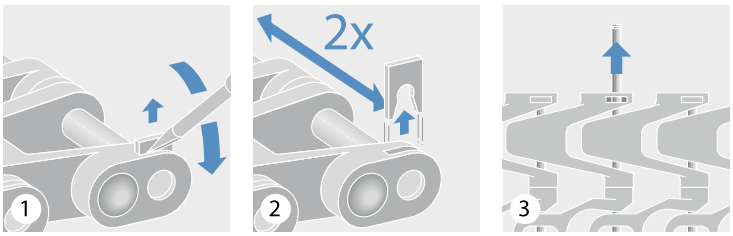

Series 9.1

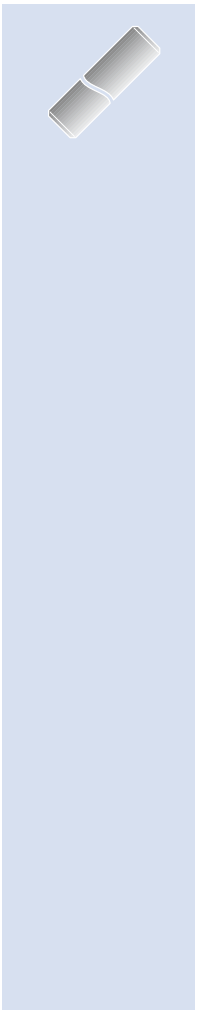

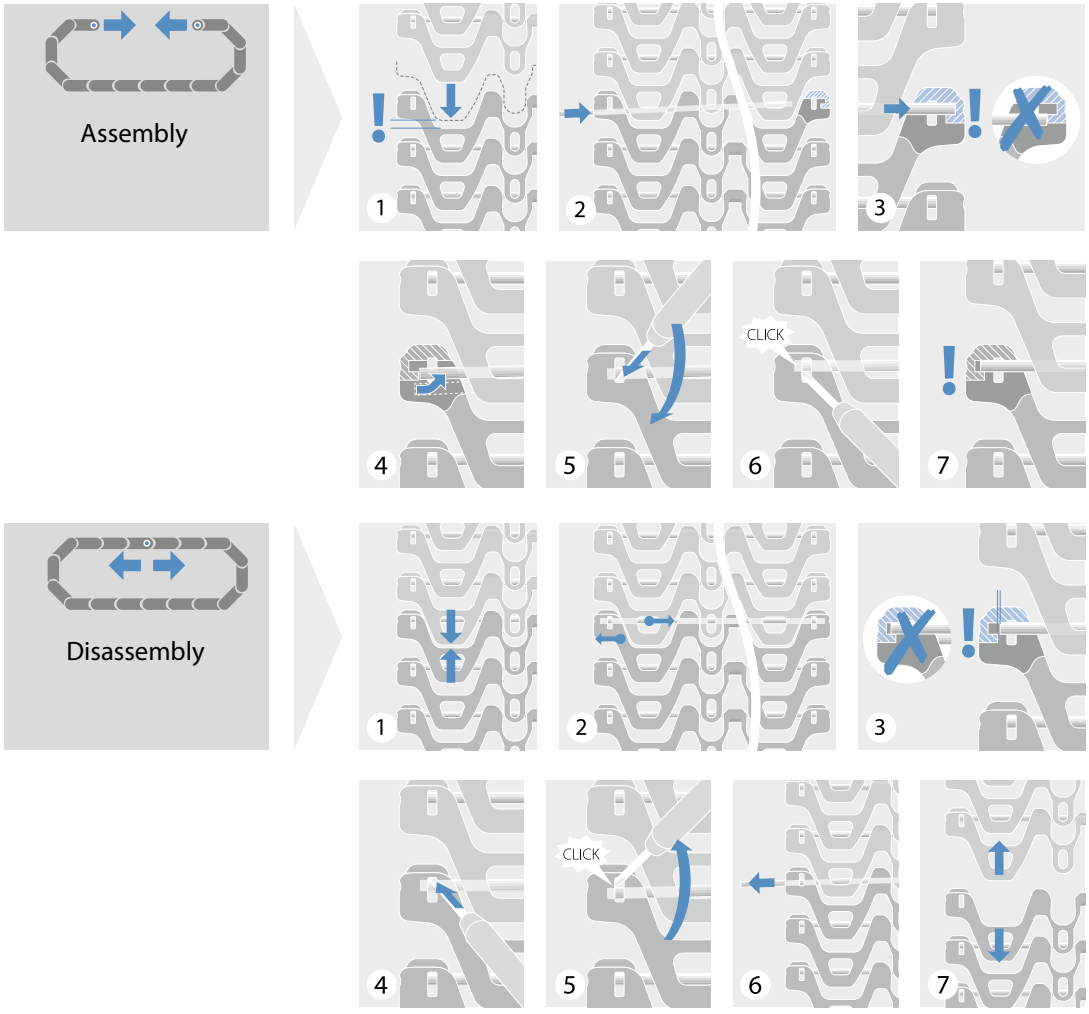

Series 11

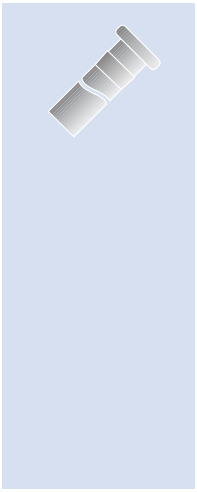

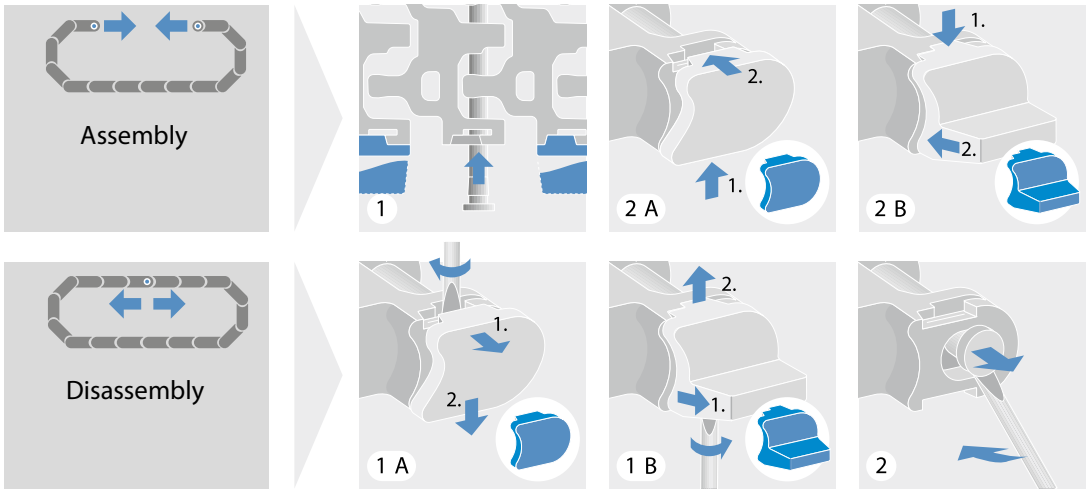

5.4 JOINING BELT SECTIONS

Series 13

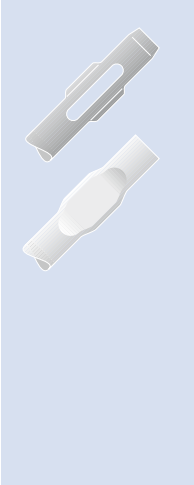

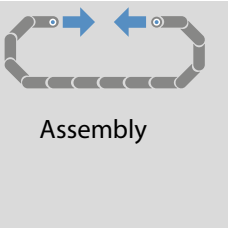

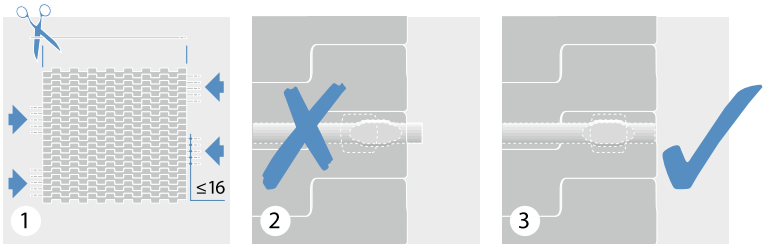

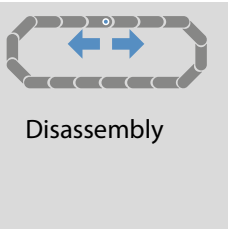

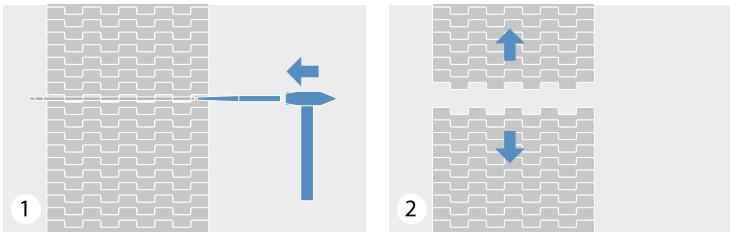

Series 14, 15

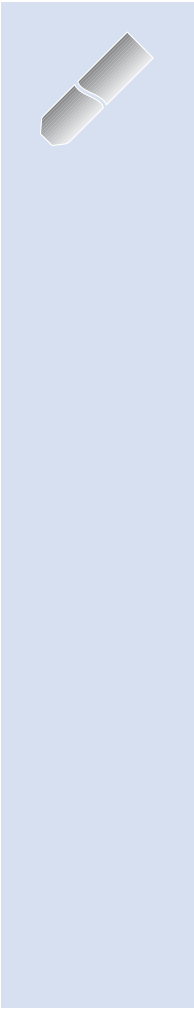

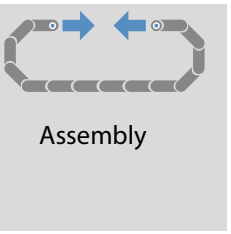

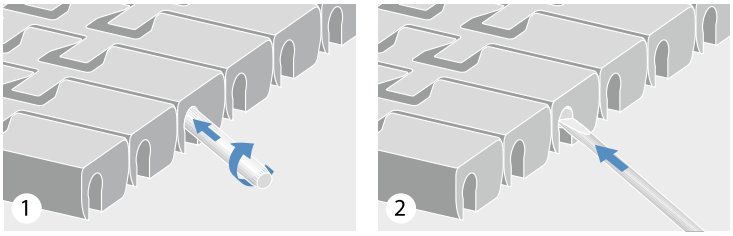

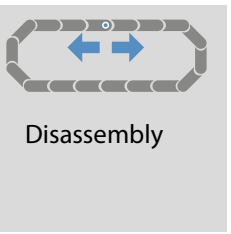

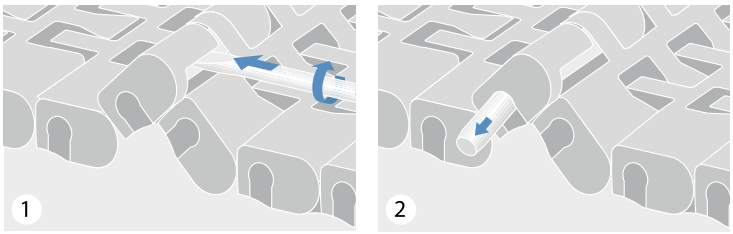

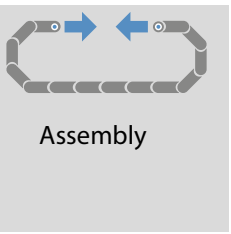

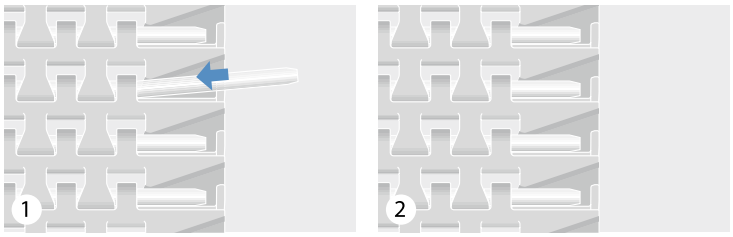

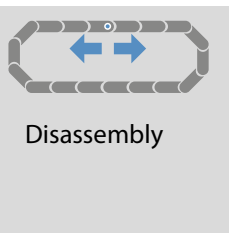

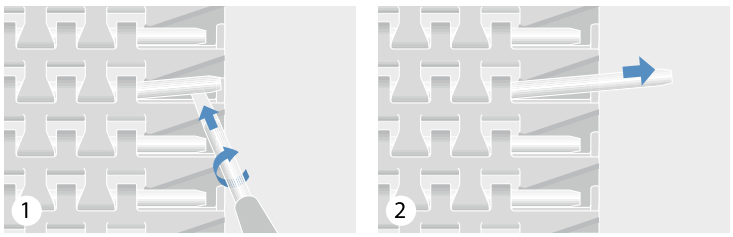

Series 17



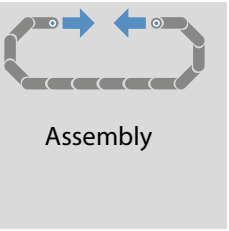

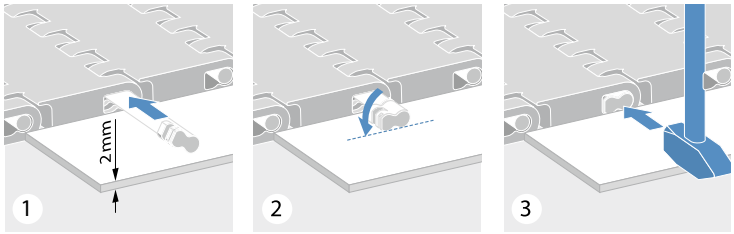

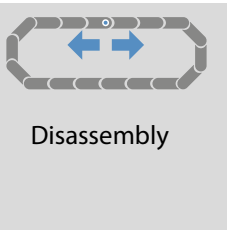

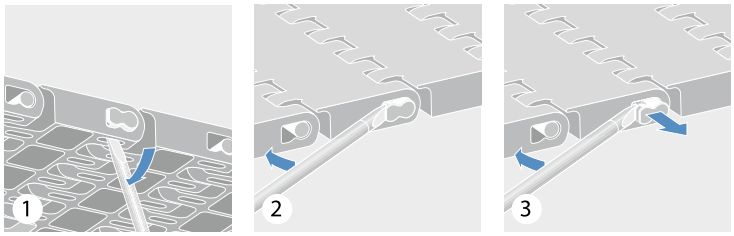

Series 18



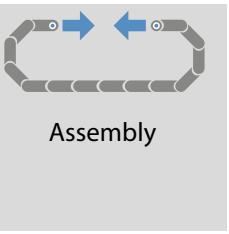

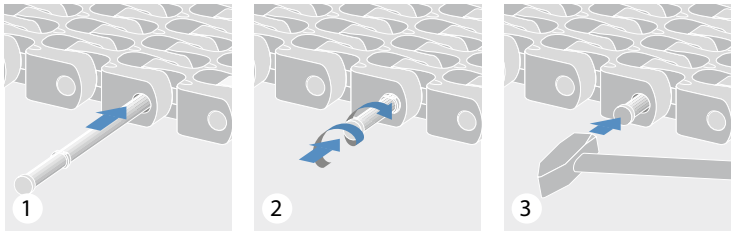

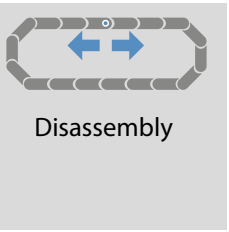

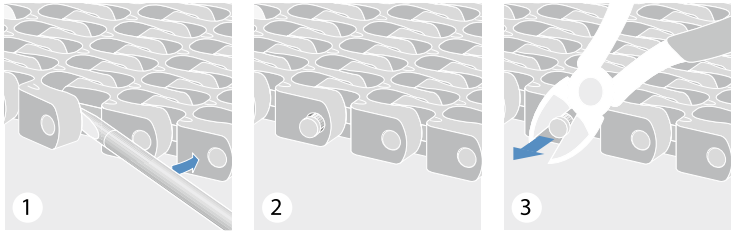

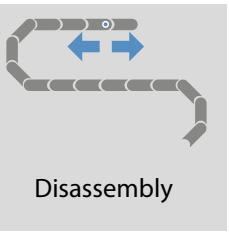

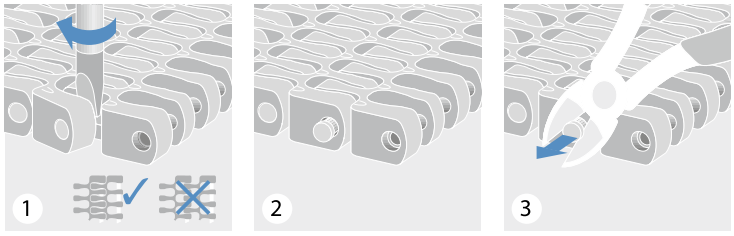

5.4 JOINING BELT SECTIONS

Series 19

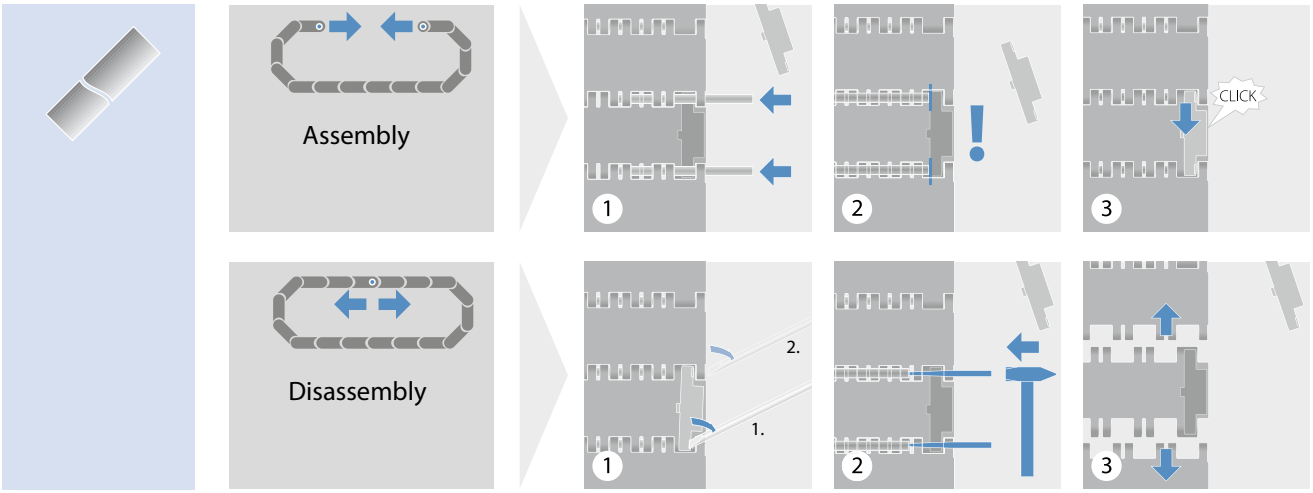

Series 4.1 ProSnap (PSP)

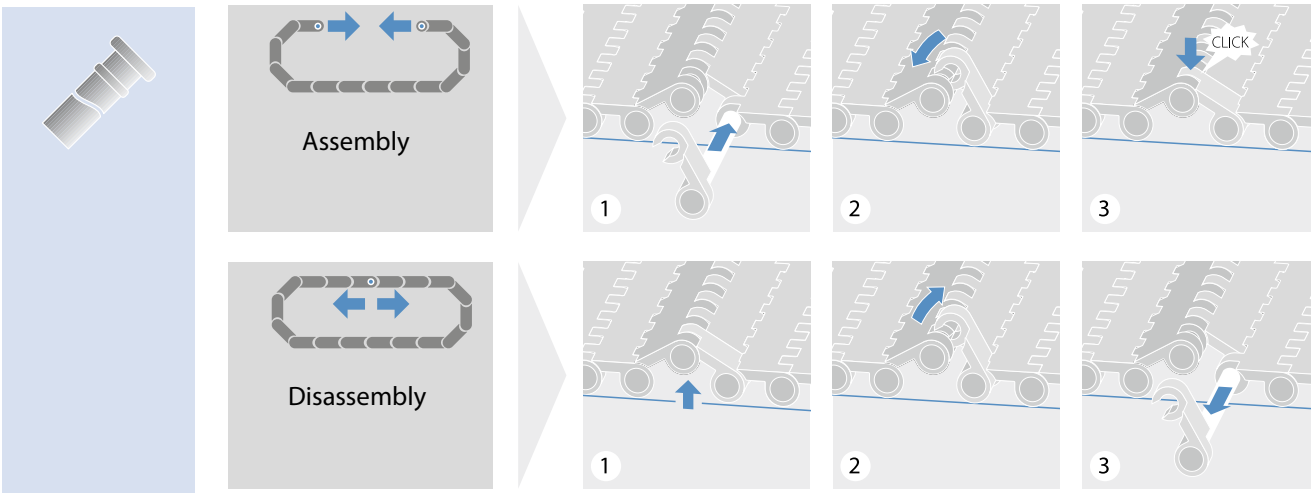

Series 6.1, 10 ProSnap (PSP)

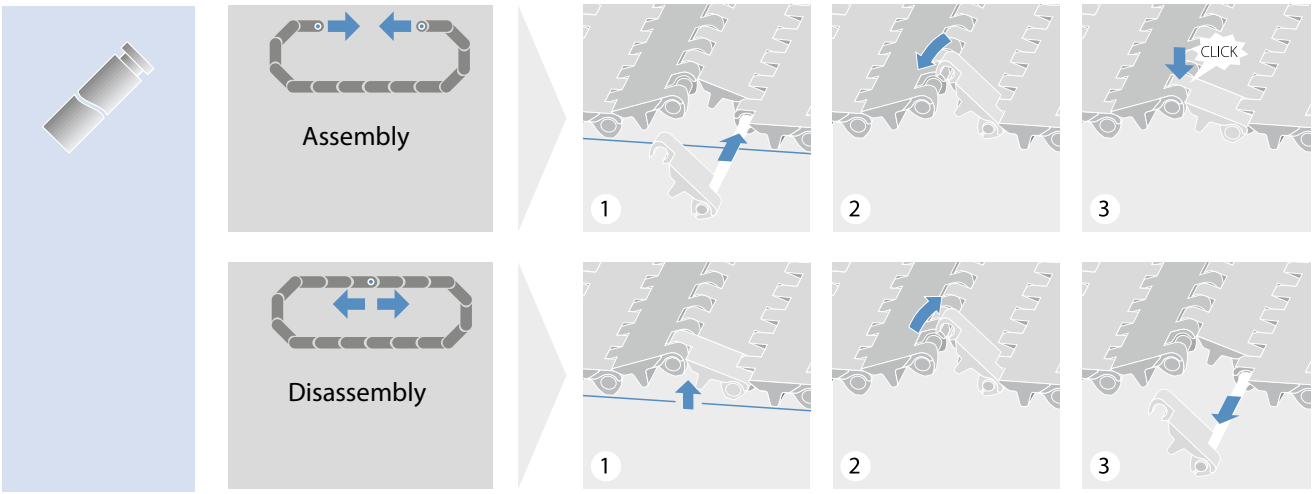

Series 13 ProSnap (PSP)

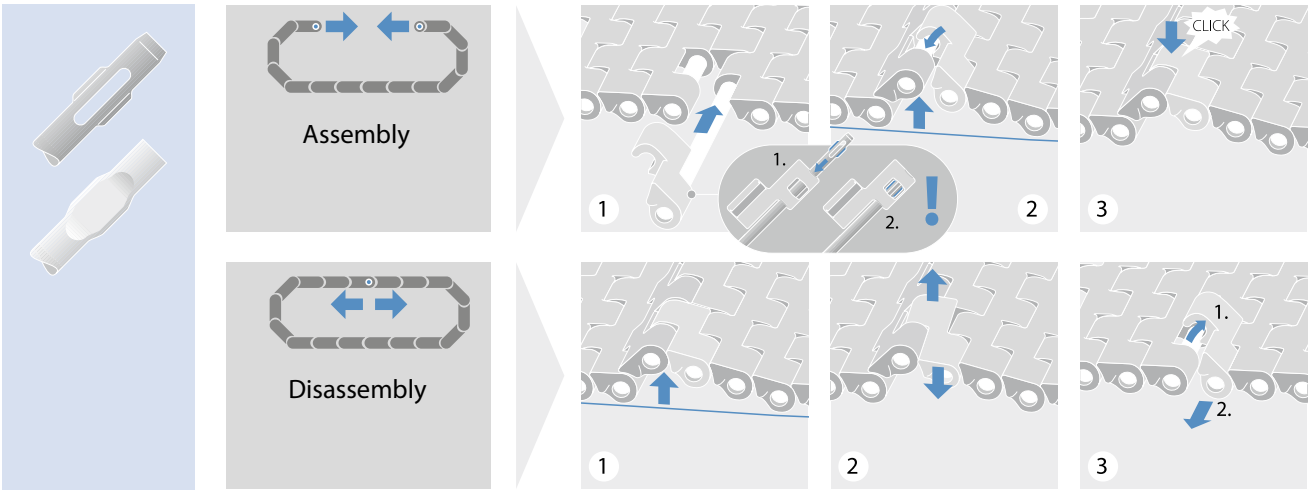

5.4 JOINING BELT SECTIONS

Small plugs (HR) for extruded or steel pins (Series 4.1 and 8)

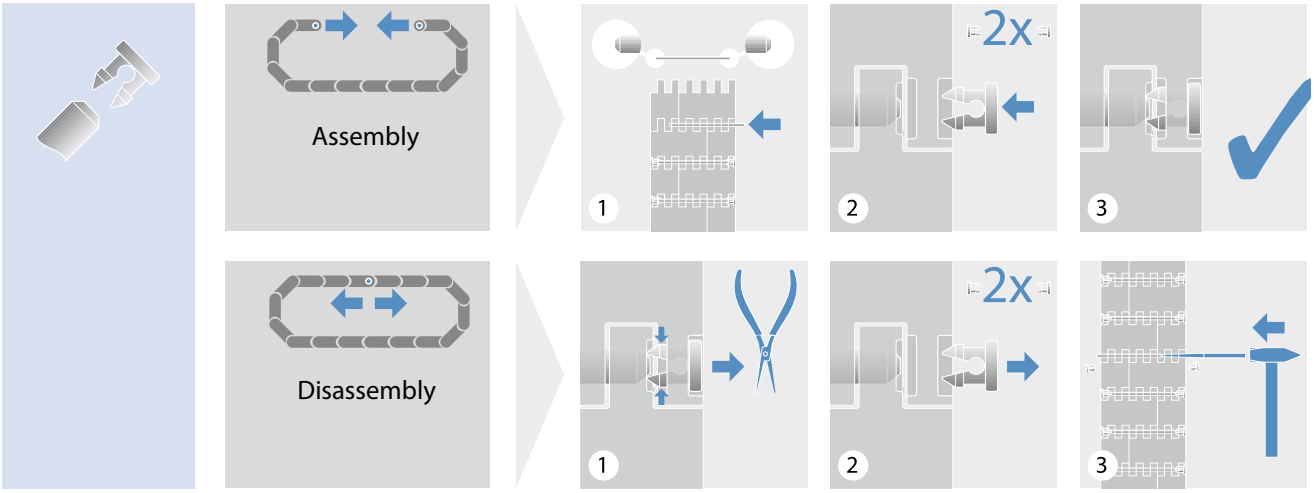

Small plugs (HR2) for extruded or steel pins (Series 6.1 and 10)

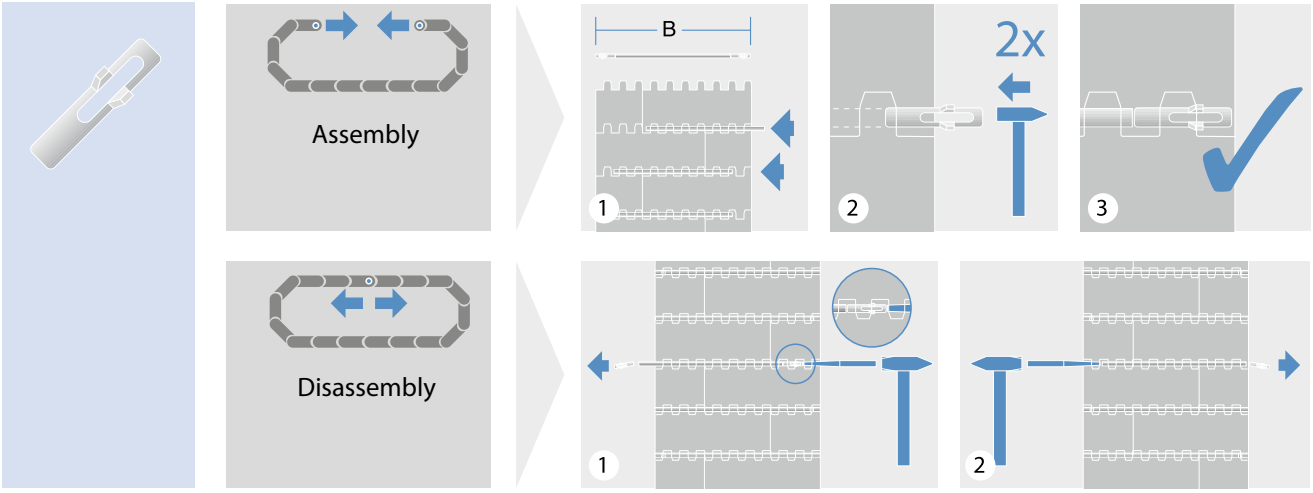

Belts with more than one pin

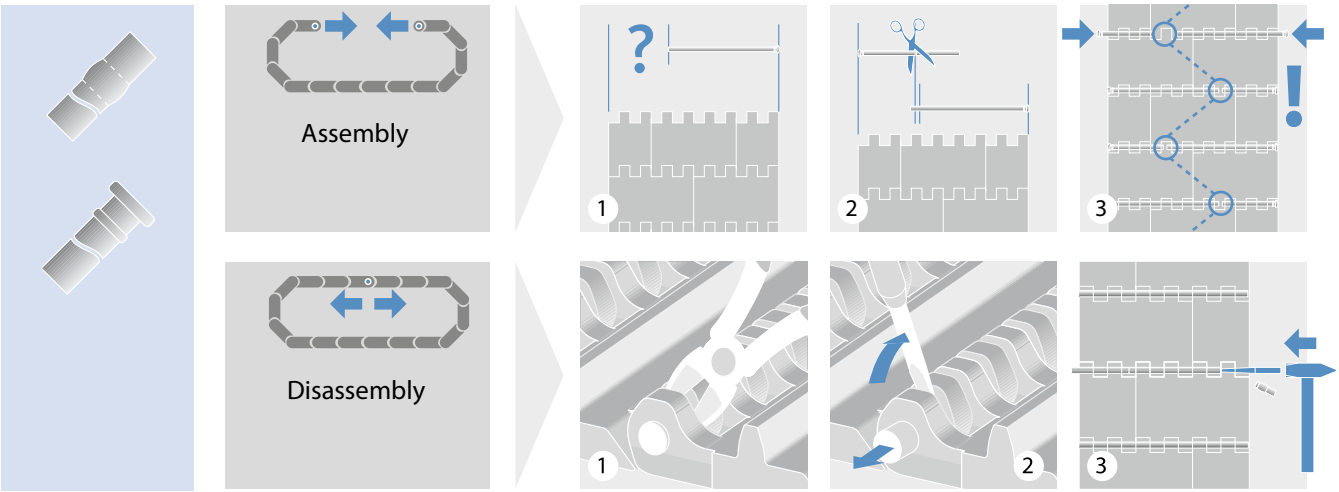

Alternativ options for belts with more than one pin per hinge
Series 4.1, 6.1, 8, 10, 13

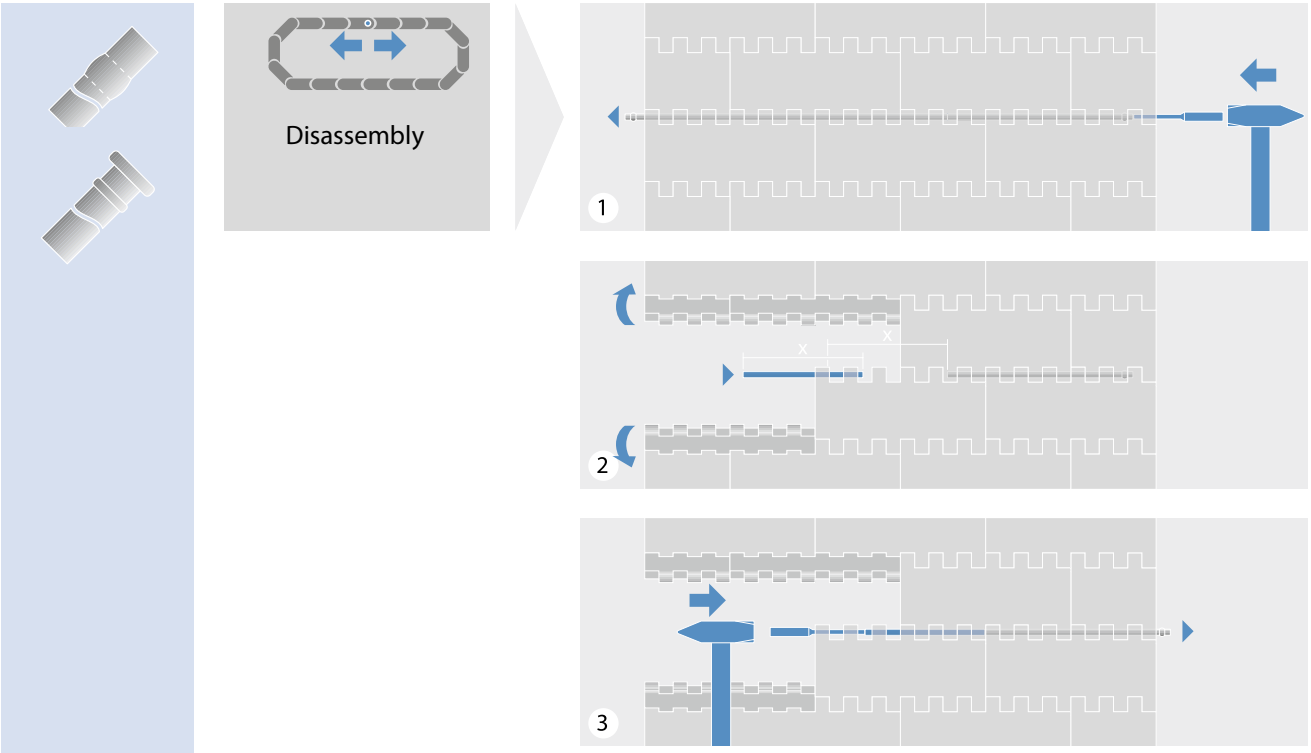

5.5 INSTALLING A MODULAR BELT

Installation

– Lay the belt/belt sections flat on the wearstrips on the conveyor frame. Join belt sections using the hinge pins included with the shipment (1–4). Avoid impact to belt and sprockets during installation.



1 Move both belt ends until they interlink correctly



2 Insert rod



3 Gently tap its head into retaining position



4 Cut protruding rod end slightly behind belt edge

– Make sure the belt is not under tension when joining belt sections and ensure correct sprocket engagement when pulling the belt around drive and idler sprockets (5).
– If applicable, ensure correct belt length by allowing an appropriate amount of catenary sag between snub rollers and support rollers (5).
– Ensure correct running direction when installing a belt with side guard or profiles (6).
– Always follow the conveyor manufacturers operating instructions when operating the conveyor and the belt.

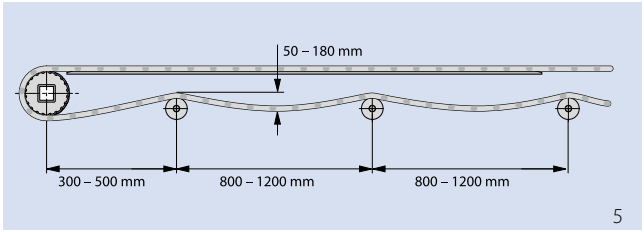

5

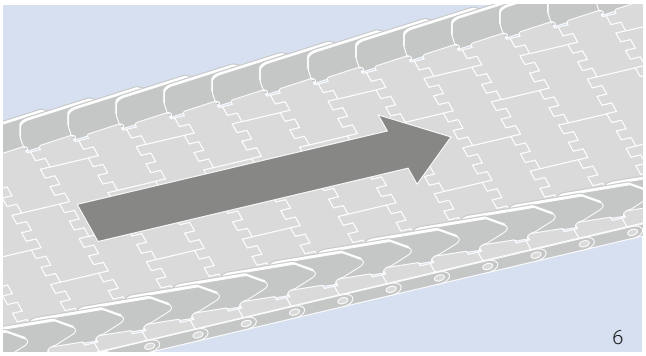

6

5.6 MAINTENANCE AND REPAIR

– All modular belts stretch as they break in during the first few weeks of operation. This is normal and should be expected. Depending on the belt load and operating environment, additional belt stretching is common.
– After the initial break-in period, the belt will probably have to be shortened. This can be accomplished by adjusting the take-up mechanism, if there is one, or by removing one or more row(s) of belting.
– If the belt has more than one module across the width, verify the integrity of the belt bricklaying pattern after removing the excess belt length. If the pattern is compromised, remove one additional row of belting or reinsert a row.
– Ensure an appropriate amount of catenary sag on the returnway after shortening the belt.
– Inspect the belt regularly to make sure it is operating properly. The frequency of the inspections depends on the general operating conditions, e.g. load, speed, abrasiveness of the application, cleaning intervals, operating temperature, etc.
  · Inspect sprockets for wear and alignment.
  · Check that the belt is tracking properly.
  · Inspect belt modules, profiles and side guards for damage and wear.
  · Inspect the belt for protruding hinge pins.
  · Inspect the conveyor for loose wearstrips/belt supports.

Broken or worn parts must be replaced immediately to ensure problem-free operation.

Do not mix new and used sprockets at the same shaft. To ensure the optimum performance and wear life, Forbo recommends changing the sprockets and the belts at the same time.

5.7 CLEANING

– Regular cleaning is highly recommended. Cleaning reduces the overall wear of the belt, sprockets and hinge pins and increases belt life. The specific cleaning intervals depend on the application and the operating environment.

– Optimal cleaning solutions and methods depend on the specific application and industry requirements. The food processing industry has exceedingly stringent hygiene and sanitation requirements, such as HACCP, and increasingly follows sanitation benchmarks set by the Global Food Safety Initiative. Adhering to the applicable sanitation standards is the responsibility of the user.

– Belt materials are often selected based on application requirements, e.g. abrasion resistance, load and operating temperature. However, different materials have different levels of chemical resistance (please see chapter 2.1 "Plastic materials (Properties)" for the relative chemical resistance of standard belt materials against commonly used chemicals).

– Verify that the cleaning agent is suitable for the specific belt material prior to cleaning.

  · If in doubt about the suitability of the cleaning solution, please consult the supplier of the cleaning solution.

  · When using hot water for cleaning, do not exceed the maximum temperature allowed for the belt material.

  · Never exceed the recommended chemical concentration or the exposure time of the cleaning solution. High chemical concentrations, and high chlorine concentrations in particular, will degrade plastic materials prematurely.

  · Always rinse the belt thoroughly with water after cleaning.

5.8 PREVENTIVE MAINTENANCE AND TROUBLESHOOTING

The belt is not tracking properly; the belt edges touch the frame

Sprockets are not aligned	If the total number of teeth of a sprocket with a square bore is not divisible by 4, the sprockets must be "timed" by aligning the teeth.
Sprockets on the drive and/or idler shafts are misaligned; the locked center sprocket on either shaft is incorrectly positioned or loose	The center sprocket on the drive and idler shafts must be aligned, positioned in the center of the shaft and engage the belt. Check the retaining devices to ensure the center sprockets are securely fastened on the shafts.
Conveyor frame is not level and square	Check and adjust if necessary.
Drive and idler shafts are not level and/or square with each other	Check and adjust if necessary.
Two or more belt sections are misaligned and joined incorrectly, i.e. the belt edges are not straight	Inspect belt for unevenly joined belt sections; realign the belt section(s).

Sprockets do not engage correctly or sufficiently

Incorrect "A" dimension and/or too large a gap between sprockets and end of wearstrips	Adjust the position of the shaft(s) to attain the recommended dimensions.
Sprockets are not aligned	If the total number of teeth of a sprocket with a square bore is not divisible by 4, the sprockets must be "timed" by aligning the teeth. Check if the axial position of the sprockets are aligned to the engagement points of the belt. Check if the sprockets can freely move sideways on the shaft.
Insufficient belt tension	Make sure there is sufficient catenary sag to provide back tension. This can be ensured by using a weighted roller (see chapter 3.3)
Not enough belt wraps around the sprockets	The recommended belt wrap around the sprocket is between 180° and a minimum of 150°. To ensure a 180° wrap, install a snub roller or move the existing snub roller.

5.8 PREVENTIVE MAINTENANCE AND TROUBLESHOOTING

Excessive sprocket wear

Abrasive conditions	Improve cleaning methods and frequency or add protective shields to reduce the amount of abrasive material coming into contact with the belt and sprockets. Use TPC1 sprockets or stainless steel sprockets.
Not enough sprockets	Verify that the recommended minimum number of sprockets is used. Too few sprockets will cause premature sprocket wear. Add sprockets if necessary.
Sprockets are not aligned	If the total number of teeth of a sprocket with a square bore is not divisible by 4, the sprockets must be "timed" by aligning the teeth.
Incorrect "A" dimension and/or too large a gap between sprocket and end of wearstrips	Adjust the position of the shaft(s) to attain the recommended dimensions.
Sprockets on the drive and/or idler shaft are misaligned; the locked center sprocket on either shaft is incorrectly positioned or is loose	The center sprocket on the drive and idler shafts must be aligned, positioned in the center of the shafts and engage the belt. Check the retaining devices to ensure the center sprockets are securely fastened on the shafts.
High belt speed	High belt speed will increase sprocket wear, especially on conveyors with a short center distance. Reduce speed if possible.
High belt tension	High belt tension will increase sprocket wear. Make sure there is an appropriate amount of catenary sag.

Excessive belt wear

Abrasive conditions	Improve cleaning methods and frequency or add protective shields to reduce the amount of abrasive material coming in contact with belt and sprockets. Use TPC1 sprockets or stainless steel sprockets.
Incorrect belt material	Check material specifications to ensure the optimal material is used (see also chapter 2.1, belt material orientation chart). Contact your Forbo Movement Systems sales representative for a recommendation.
Incorrect wearstrip material	Check material specifications to ensure the optimal material is used. Contact your Forbo Movement Systems sales representative for a recommendation.
Incorrect wearstrip arrangement	Check the wearstrips are placed according to design guidelines. Contact your Forbo Movement Systems sales representative for recommendations.
Product loading	If wear occur where product is loaded onto the belt, reduce the distance between the product and the belt if possible.
High belt speed	High belt speed will increase wear, especially on conveyors with a short center distance. Reduce belt speed if possible.

Belt stretching; excessive catenary sag

Abrasive conditions	Improve cleaning methods and frequency or add protective shields to reduce the amount of abrasive material coming in contact with belt and sprockets. Use TPC1 sprockets or stainless steel sprockets.
Incorrect belt tension	Adjust tension by adding or reducing catenary sag.
Incorrect belt or hinge pin material	Check belt and hinge pin material used. Contact your Forbo Movement Systems sales representative to confirm the correct material for the application.
Varying operating temperature	Varying operating temperatures can cause the belt to elongate and/or contract significantly. Verify that the catenary sag can accommodate the elongation/contraction. It may be necessary to install a gravity take-up or a pneumatic tensioning device.

Hinge pins are migrating out of the belt

Pins are not properly locked	Check if pin heads, locking collars, clips or belt edge modules are damaged. Replace if necessary.
Pins elongate due temperature	Select appropriate pin material with in consultation with Forbo Movement Systems. Shorten pins and reinstall/replace with new, shorter pins.
Pins elongate due to high load	High transverse forces on pin. Conveyor frame is not level and square. Check frame and adjust accordingly.
Pins do not lock correctly and are too loose or too tight.	Verify the pins are of the correct type.
Pins cannot be easily extracted	In abrasive applications “camshafting” can occur (uneven lateral wear of the hinge pins). This can make it difficult to extract the hinge pins, particularly in wide belts. Cut off the hinge pin locking collar and carefully knock out the hinge pin from one side, using a suitable steel pin and a hammer.



6 APPENDIX

6.1 Glossary

6.2 Glossary of symbols

6.3 Additional tables

6.4 Conversion table metric/imperial

6.5 Assembly information

6.6 Questionnaire

6.7 Notes

6.8 Legal notes

6.1 GLOSSARY

	Term	Explanation
A		
	Accumulation length	Length of product accumulation in running direction of the belt. Also known as “Back-up length”
	Adjusted belt pull	Effective pelt pull which is adjusted by taking into account the operational factor
	Admissible belt pull	Actual allowable belt pull after weakening effects like temperature are taken into account in the nominal belt strength
B		
	Back flex	Opposite of front flex. Negative bending of the belt.
	Backed up product load	The load (product weight) accumulating on top of the belt
	Back-up length	Length of product accumulation in running direction of the belt. Also referred to as “Accumulation length”
	Belt width	Shortest distance between belt edges
	Bi-directional drive	Drive system with a motor on each side allowing the conveyor to run in both directions
	Brick-laid pattern	Belt modules are staggered from row to row like bricks in a wall. This is to avoid cross joints.
C		
	Carryway	Transport side of the belt.
	Catenary sag	Unsupported part of belt which provides tensioning of the belt
	CCW	Abbreviation for counter-clockwise
	Center drive	Or Omega drive. A conveyor with the drive shaft located below the conveyor on the return path with the belt wrapping around the sprocket like an upside-down Ω.
	Chordal action	See “Polygon effect”
	Coefficient of friction	Ratio between the force required to move two sliding surfaces over each other, divided by the force pressing them together
	Coef. of friction Belt – Curve	Defines the resistance to sliding between the belt and the radius wearstrip exposed to the radial force in a curve. This is normally between the inner wearstrip and the belt edge
	Coef. of friction Belt – Product	Defines the resistance to products sliding on the belt surface. Mainly relevant for load calculation on accumulating conveyor
	Coef. of friction Belt – Slider	Defines the resistance to sliding between the conveyor bed (slider) and the bottom side of the belt
	Coefficient of thermal expansion	Coefficient used to calculate the change in dimensions due to a temperature change
	Collapse factor	Defines the minimum inside radius a side flexing PMB is capable of as a function of the belt width
	Conveyed load	Total weight of product conveyed on the belt
	Conveying length	Center to center distance (C – C), measured from conveyor head to tail at center of the drive/idler shaft

Term	Explanation
CW	Abbreviation for clockwise
D	
Decline conveyor	Lowerator. A (section of) conveyor lowering products from a higher level to a lower level
E	
Effective belt pull	Belt pull calculated by taking weight of belt, product and friction forces into consideration
Elevation	The vertical change in altitude for an incline conveyor
EU	Material complies with standards for food contact articles in at least one member state of the European Union
F	
FDA	Food and Drug Administration. Federal US agency which regulates materials that may come in contact with food
Finger plates	Special transferplate used only for raised rib belts. It ensures smooth product transfers.
Flat top belt	Standard belt with a flat smooth surface
G	
Gravity take-up	System which uses a weighted roller (->gravity) to tension the belt
Grid top	Mesh or web like surface structure with a very large open area (> 40 %)
H	
Hold Down Tab	Special modules which can be inserted into the middle of the belt to hold it down in back-flexing sections
I	
Idling shaft	The shaft of a conveyor that is not driven (most tail shafts)
Incline conveyor	A (section of) conveyor lifting products up an incline
Indent	Distance of width from the belt edge to beginning of a structure (e.g. side guard, profile, etc.)
L	
Lower head drive	Conveyor with lowered drive shaft to reduce the transfer gap
N	
Nominal belt pull	Maximum theoretical belt pull under ideal conditions
NSF International	NSF International is a product testing, inspection and certification organization based in Ann Arbor, Michigan
O	
Omega drive	See “Center drive”
Open hinge	Hinges that are easy to clean
Opening	Percent open area of a belt’s surface
Operational factor	Operational factor is used to calculate adjusted belt pull from effective belt pull
P	
Pitch	Distance between pins
Pitch diameter	Effective diameter of a sprocket

6.1 GLOSSARY

Term	Explanation
PMB	Plastic Modular Belt
Polygon effect	Also referred to as "chordal action". An impression of the variation in linear belt speed cause by the sprocket not forming a true arc but a polygon.
Profile	Profile modules have a molded vertical plate used to elevate products on incline conveyors.
Pusher drive	Tail driven conveyor
PV limit	A value defined for two mating materials which expresses the pressure (P) and velocity(V) limitations when materials side against each other
S	
Screw-operated take-up	Rigid pre-tensioning system using screws
Side flexing belt	Belt with the ability to side flex allowing it to run in curves. May also be referred to as radius conveyors/belts.
Side guards	Small plates that are assembled close to belt edge to prevent product falling from the belt edge
Slider bed	Fully closed plate supporting the belt (may have holes or gaps to allow dirt or debris to escape)
Slider support	See "wearstrip"
Spiral conveyor	Belt helically wrapped around a drum.
Sprocket	Wheel with teeth that engages with the modules of a belt to provide positive torque transmission
Structure	Parts of a module or belt which provide specific attributes.
T	
Take-up	Belt tensioning device
Temperature expansion coefficient	Coefficient of thermal expansion is used to calculate the change in dimensions due to temperature changes
Temperature factor, c_T	Polymers (plastic) get softer with increasing temperature. The temperature factor will reduce the belt pull capacity with increasing temperature depending on belt material.
Thermal expansion	Temperature dependent change in dimension (+ or –) caused by the material's temperature expansion coefficient
Total belt length	Actual belt length necessary to wrap around the conveyor
U	
USDA	United States Department of Agriculture. US federal agency which has defined requirements for equipment which may be in contact with meat and poultry or dairy. Compliance verification for PMB is managed by NSF International
V	
V-shape arrangement	Belt wearstrips arranged in V-shape or "chevron"
W	
Wearstrip	Plastic strips on which the belt runs or is guided.

6.2 GLOSSARY OF SYMBOLS

	Designation	Symbols	Metric	Imperial
Forces	Effective belt pull	F_U	N	lb
	Adjusted belt pull	F_{adj}	N	lb
	Adjusted belt pull per mm/ft belt width	F'_{adj}	$\frac{N}{mm}$	$\frac{lb}{ft}$
	Admissible belt pull	F_{adm}	N	lb
	Admissible belt pull per mm/ft belt width	F'_{adm}	$\frac{N}{mm}$	$\frac{lb}{ft}$
	Nominal belt pull per mm/ft belt width	F'_{nom}	$\frac{N}{mm}$	$\frac{lb}{ft}$
	Nominal belt pull in curve	$F_{nom,curve}$	N	lb
	Shaft load	F_S	N	lb
Factors & coefficients	Coefficient of friction belt to accumulated products	μ_{acc}	–	–
	Coefficient of friction belt to slider	μ_s	–	–
	Coefficient of friction belt to curve side support	μ_c	–	–
	Coefficient of thermal expansion	α	$\frac{mm}{m \cdot K}$	$\frac{in}{m \cdot °F}$
	Operational factor	C_{Op}	–	–
	Temperature factor	C_T	–	–
	Collapse factor	C_C	–	–
	Conversational factor	g	9.81 m/s^2	1
Conveyor dimensions	Conveyor length/Center to center distance	l_{c-c}	m	ft
	Elevation of conveyor	h_e	m	ft
	Angle of incline/decline	α_i	°	°
	Angle of curve	α_c	°	°
	Accumulation length	l_{acc}	mm	in
	Mass of conveyed product	m_P	kg	lb
	Mass of accumulated products	m_{acc}	kg	lb
	Mass of entire belt in conveyor	m_B	kg	lb

6.2 GLOSSARY OF SYMBOLS

	Designation	Symbols	Metric	Imperial
Belt dimensions	Mass of belt (see data sheet)	m'_B	$\frac{kg}{m^2}$	$\frac{lb}{ft^2}$
	Belt speed	v	$\frac{m}{min}$	$\frac{ft}{min}$
	Belt length	l_B	mm	in
	Belt width	W_B	mm	in
	Width deviation	W_{dev}	%	%
	Minimum belt width	W_{min}	mm	in
	Effective belt width	$W_{b,eff}$	mm	in
	Width increment	W_{inc}	mm	in
	Width tolerance	W_{tol}	%	%
	Belt pitch	p	mm	in
	Pin diameter	d_{pin}	mm	in
	Height of pin bore position	h_{pin}	mm	in
	Module thickness	h_m	mm	in
	Inner side flex radius	r1	mm	in
	Front flex radius on rollers	r2	mm	in
	Back flex radius on load bearing rollers	r3	mm	in
	Back flex radius on Hold Down shoes	r4	mm	in
	Back flex radius on rollers	r5	mm	in
Structure dimensions	Structure height (e.g. FRT, roller above surface, etc.)	h_s	mm	in
	Structure width	w	mm	in
	Indent of structures (profiles, FRT, roller tops, PRR cut-out)	a	mm	in
	Distance between structures across belt width (profiles, FRT, roller)	b	mm	in
	Structure (roller) distance increment	b_{inc}	mm	in
	Spacing between structures in travel direction (profiles, FRT, roller)	s	mm	in
	Roller diameter	d_{rol}	mm	in
	Number of rollers across belt width	n_{rol}	–	–

	Designation	Symbols	Metric	Imperial
Shaft & Drive dimensions	Calculated motor power	P_M	kW	hp
	Power requirement at drive shaft	P_S	kW	hp
	Torque	M	Nm	ft · lb
	Shaft revolutions	R_s	rpm	rpm
	Mass of shaft	m_s	kg	lb
	Shaft deflection	y_s	mm	in
	Shaft length	l_s	mm	in
	Shaft diameter	d_s	mm	in
	Shaft edge length (square and hexagon)	W_s	mm	in
	Shaft wall thickness of hollow shafts	t_s	mm	in
	Width of keyway	W_K	mm	in
	Diameter + keyway height	d_K	mm	in
	Height of keyway	h_K	mm	in
	Bearing center distance	l_b	mm	in
	Torsion angle	φ	°	°
	Modulus of elasticity	E	$\frac{N}{mm^2}$	$\frac{lb}{in^2}$
	Geometrical moment of inertia	I	mm^4	in^4
Sprocket dimensions	Axis to wearstrip top	A	mm	in
	Axis to belt top	B	mm	in
	Axis to conveyor frame	C_{min}	mm	in
	Sprocket pitch diameter	D_0	mm	in
	Sprocket width	W_{spr}	mm	in
	Number of sprockets	n_{spr}	–	–
	Temperature	T	°C	°F

6.3 ADDITIONAL TABLES

Speed Limit Curve Belts

Admissible belt speed

The belt speed always refers to the speed when running straight. Due to the nature of a side flexing belt this will also be the speed of the belt at the outer radius of the curve. The speed on the inside radius of the belt depends on the collapse factor. The smaller the collapse factor the higher the speed reduction on the inside radius. As a result there is a relationship between the collapse factor and the admissible belt speed.

The key criteria limiting the admissible belt speed is belt and wearstrip temperature. With increased speed and/or increased belt load, the temperature on the inner belt edge and the inner curve wearstrip will increase. This will lead to accelerated wear, potential dust and eventually the belt edge and/or wearstrip melting.

Thin wearstrips with good heat transmission to a steel support structure will increase the admissible belt pull. On the other hand a large solid machined wearstrip will have more problems transmitting the heat generated from the friction between the belt and wearstrip. This will lead to a temperature increase.

Lower friction between the belt and wearstrip will lead to a higher admissible belt speed and the material combination (belt edge and wearstrip) will also have a strong impact on the admissible belt speed. Soft materials like PP with relatively high friction coefficients will offer a relatively low admissible belt speed before significant wear and dust occurs.

The following chart shows the correlation between admissible belt pull and maximum belt speed for POM belts running on high quality wearstrips of medium thickness under clean conditions:

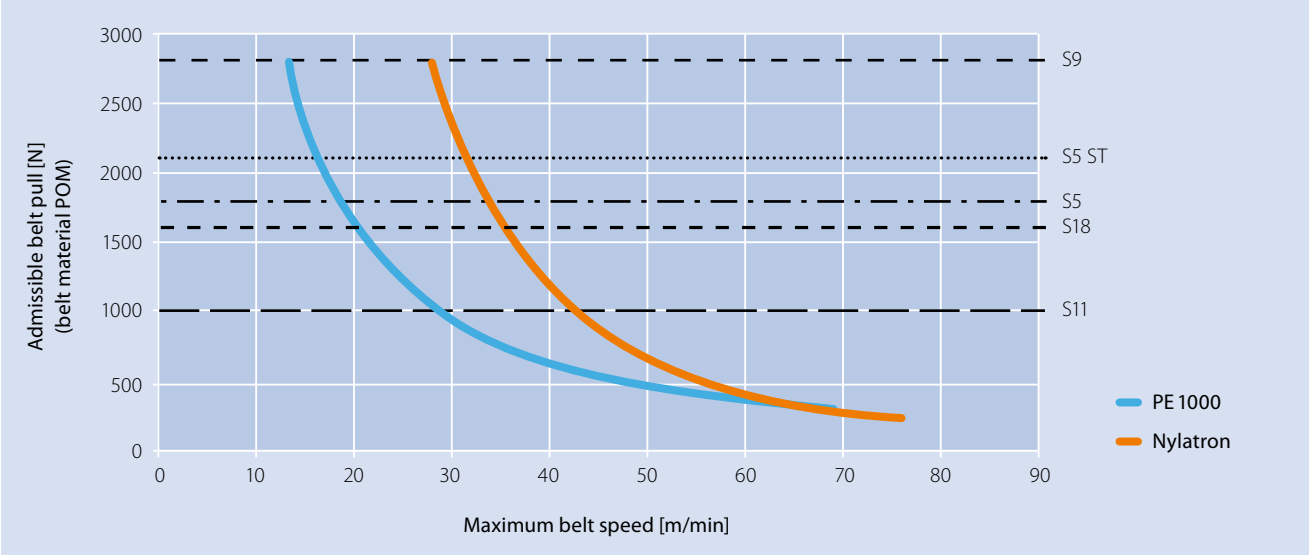

Attention:

In the case of Siegling Prolink Series 11 and Combo belts (a combination of Siegling Prolink Series 5 ST and Siegling Prolink Series 11) different dimensions and characteristics must be taken into account.

Admissible belt speed Series 11

Series 11 has been developed with special caps on the belt side, meaning that the material combination on this critical part of a side-flexing belt can be optimized.
For the standard Series 11 belts, the caps or HD on the belt edge are made of POM. For these we recommend using wearstrips in UHMW PE, also known as PEHD1000.

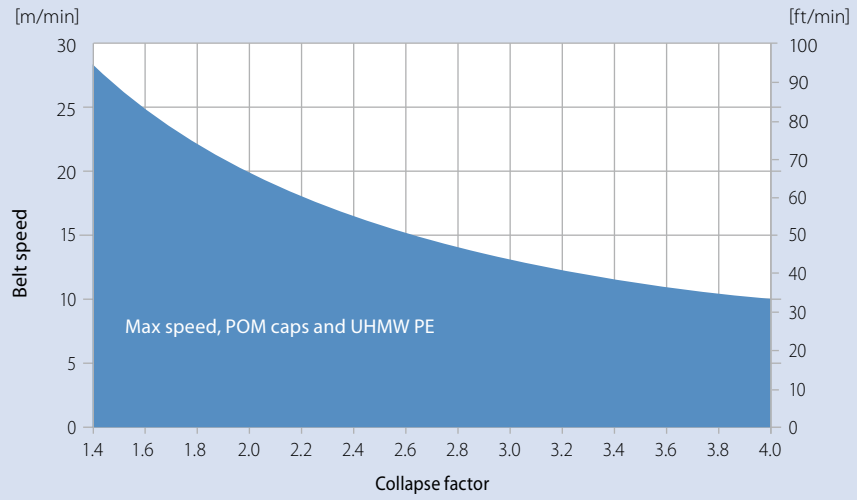

Speed limits caps in POM and wearstrip in UHMW PE (PEHD1000)

For radius conveyors running at higher speeds, Series 11 offers an alternative with caps or HD on the belt edge made of a special robust, resistant material identified by material code HW. For these we recommend using wearstrips in Nylatron NSM, a special PA material with solid lubricant additives. This material combination will in general offer an extended service life for conveyors with heavy loads or conveyors running in abrasive environments.

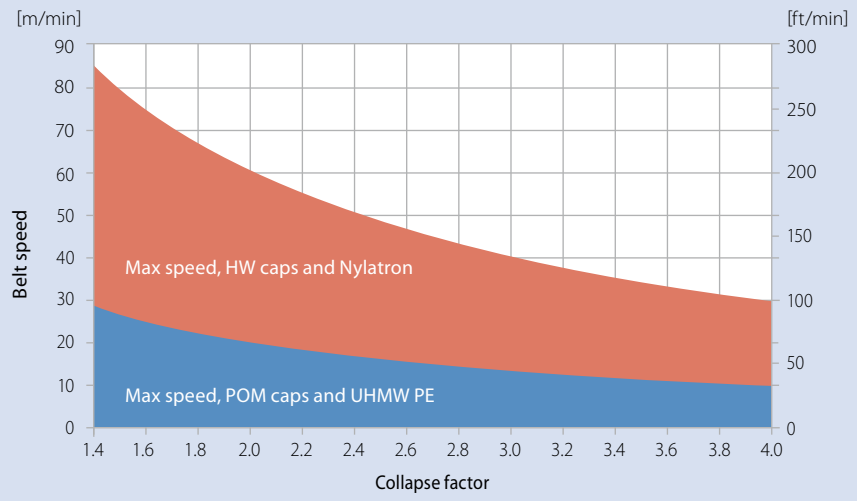

Speed limits caps HW and wearstrip in Nylatron

6.3 ADDITIONAL TABLES

Shaft dimensions for molded sprockets

Metric

Nominal shaft width Square shafts	W_s [mm]	
SQ 20 mm	20	± 0.15
SQ 25 mm	25	± 0.15
SQ 30 mm	30	± 0.15
SQ 40 mm	40	± 0.2
SQ 50 mm	50	± 0.2
SQ 60 mm	60	± 0.2
SQ 80 mm	80	± 0.2
SQ 90 mm	90	± 0.2

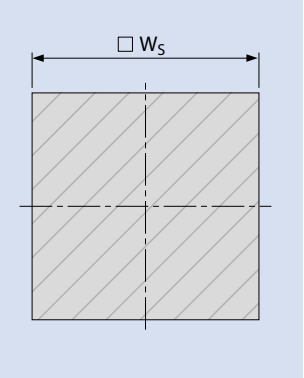

Nominal shaft diameter Round shafts	[mm]							
	d_s	Tol.	W_K	Tol.	h_K	Tol.	d_K	Tol.
RD 20 mm	20	−0.21	6	−0.3	2.8	−0.2	22.8	−0.41
RD 25 mm	25	−0.21	8	−0.4	3.3	−0.2	28.3	−0.41
RD 30 mm	30	−0.21	8	−0.4	3.3	−0.2	33.3	−0.41
RD 40 mm	40	−0.25	12	−0.4	3.3	−0.2	43.3	−0.45
RD 50 mm	50	−0.25	14	−0.4	3.8	−0.2	53.8	−0.45
RD 60 mm	60	−0.3	18	−0.4	4.4	−0.2	64.4	−0.5

Imperial

Nominal shaft width Square shafts		W_s [in]	
SQ 1 in	(1")	1	± 0.006
SQ 1.25 in	(1 ¼")	1.25	± 0.006
SQ 1.5 in	(1 ½")	1.5	± 0.006
SQ 2.0 in	(2")	2	± 0.008
SQ 2.5 in	(2 ½")	2.5	± 0.008
SQ 3.5 in	(3 ½")	3.5	± 0.008

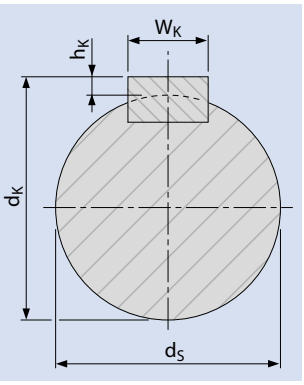

Nominal shaft diameter Round shafts		[in]							
		d_s	Tol.	W_K	Tol.	h_K	Tol.	d_K	Tol.
RD 0.75 in	(¾")	0.75	−0.008	0.188	−0.001	0.087	−0.015	0.837	−0.023
RD 1 in	(1")	1	−0.008	0.25	−0.001	0.114	−0.015	1.114	−0.023
RD 1.19 in	(1 3⁄16")	1.187	−0.010	0.25	−0.001	0.118	−0.015	1.306	−0.025
RD 1.25 in	(1 ¼")	1.25	−0.010	0.25	−0.001	0.118	−0.015	1.368	−0.025
RD 1.44 in	(1 7⁄16")	1.438	−0.010	0.375	−0.001	0.169	−0.015	1.607	−0.025
RD 1.5 in	(1 ½")	1.5	−0.010	0.375	−0.001	0.169	−0.015	1.669	−0.025
RD 1.94 in	(1 15⁄16")	1.938	−0.010	0.5	−0.002	0.224	−0.015	2.162	−0.025
RD 2 in	(2")	2	−0.012	0.5	−0.002	0.224	−0.015	2.224	−0.027
RD 2.5 in	(2 ½")	2.5	−0.012	0.625	−0.002	0.28	−0.015	2.78	−0.027

Shaft dimensions (round and square) according to ISO 286-2 h12 (or closer degree of tolerance e.g. h7) can be used.
Key material according to ISO 286-2 h9 can be used.

Bore size dimensions at Prolink sprockets

To fulfill the correct fitting to the shaft, the bore size dimension of our Siegling Prolink sprockets has to fulfill our quality requirements. To consider the shape and position tolerance of the bore size, our Siegling Prolink sprockets will be checked by plug gauges.

A check of the bore size by caliber is not possible (will not consider the shape and position tolerance).

The dimensions of the bore size (see table below).

Metric

Bore size	Bore diameter [mm]
Square hub	
SQ 20 mm	20.3 ± 0.15
SQ 25 mm	25.3 ± 0.15
SQ 30 mm	30.3 ± 0.15
SQ 40 mm	40.4 ± 0.2
SQ 50 mm	50.4 ± 0.2
SQ 60 mm	60.4 ± 0.2
SQ 80 mm	80.4 ± 0.2
SQ 90 mm	90.4 ± 0.2
Round hub	
RD 18 mm	18.1 ± 0.1
RD 20 mm	20.1 ± 0.1
RD 25 mm	25.1 ± 0.1
RD 30 mm	30.1 ± 0.1
RD 40 mm	40.1 ± 0.1
RD 50 mm	50.1 ± 0.1
RD 60 mm	60.1 ± 0.1

Imperial

Bore size		Bore diameter [mm]
Square hub		
SQ 1 in	(1")	25.7 ± 0.15
SQ 1.25 in	(1 ¼")	32.05 ± 0.15
SQ 1.5 in	(1 ½")	38.4 ± 0.15
SQ 2 in	(2")	51.2 ± 0.2
SQ 2.5 in	(2 ½")	63.9 ± 0.2
SQ 3.5 in	(3 ½")	89.3 ± 0.2
Round hub		
RD 0.75 in	(¾")	19.15 ± 0.1
RD 1 in	(1")	25.5 ± 0.1
RD 1.19 in	(1 3⁄16")	30.26 ± 0.1
RD 1.25 in	(1 ¼")	31.85 ± 0.1
RD 1.44 in	(1 7⁄16")	36.6 ± 0.1
RD 1.5 in	(1 ½")	38.2 ± 0.1
RD 1.94 in	(1 15⁄16")	49.3 ± 0.1
RD 2 in	(2")	50.9 ± 0.1
RD 2.5 in	(2 ½")	63.6 ± 0.1

6.3 ADDITIONAL TABLES

Groove dimensions for circlips

Metric

Shaft diameter	Circlip	Groove width – m tolerance H13 [mm]	Groove diameter – D_S tolerance h12 [mm]	Groove distance – W
Square shaft				
SQ 20 mm	DIN 471 – 28x1.5	1.6	26.6	Sprocket width (b) + 1 mm
SQ 25 mm	DIN 471 – 35x1.5	1.6	33.0	Sprocket width (b) + 1 mm
SQ 40 mm	DIN 471 – 56x2	2.2	53.0	Sprocket width (b) + 1 mm
SQ 60 mm	DIN 471 – 85x3	3.2	81.5	Sprocket width (b) + 1 mm
SQ 80 mm	DIN 471 – 115x4	4.2	111.0	Sprocket width (b) + 1 mm
SQ 90 mm	DIN 471 – 127x4	4.2	123.0	Sprocket width (b) + 1 mm
Round shaft				
RD 20 mm	DIN 471 – 20x1.2	1.3	19.0	Sprocket width (b) + 1 mm
RD 25 mm	DIN 471 – 25x1.2	1.3	23.9	Sprocket width (b) + 1 mm
RD 30 mm	DIN 471 – 30x1.5	1.6	28.6	Sprocket width (b) + 1 mm
RD 40 mm	DIN 471 – 40x1.75	1.9	37.5	Sprocket width (b) + 1 mm

Imperial

Shaft diameter	Circlip	Groove width – m tolerance H13 [in]	Groove diameter – D_S tolerance h12 [in]	Groove distance – W
Square shaft				
SQ 1.5 in (1 ½")	SH-212	0.086	2.003	Sprocket width (b) + 3/64 in
SQ 2.5 in (2 ½")	SH-354	0.12	3.357	Sprocket width (b) + 3/64 in
SQ 2.5 in (2 ½")	SH-350*	0.12	3.316	Sprocket width (b) + 3/64 in
SQ 3.5 in (3 ½")	SH-500	0.12	4.79	Sprocket width (b) + 3/64 in
Round shaft				
RD 0.75 in (¾")	SH-75	0.046	0.704	Sprocket width (b) + 3/64 in
RD 1 in (1")	SH-100	0.046	0.94	Sprocket width (b) + 3/64 in
RD 1.19 in (1 3⁄16")	SH-118	0.056	1.118	Sprocket width (b) + 3/64 in
RD 1.25 in (1 ¼")	SH-125	0.056	1.176	Sprocket width (b) + 3/64 in
RD 1.38 in (1 3⁄8")	SH-137	0.056	1.291	Sprocket width (b) + 3/64 in
RD 1.44 in (1 7⁄16")	SH-143	0.056	1.35	Sprocket width (b) + 3/64 in
RD 1.5 in (1 ½")	SH-150	0.056	1.406	Sprocket width (b) + 3/64 in

* alternativ to SH-354

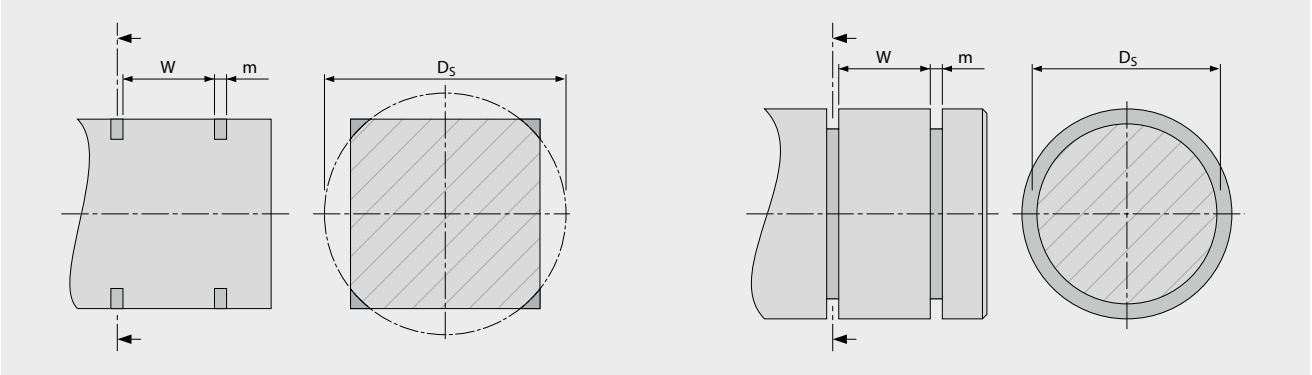

6.3 ADDITIONAL TABLES

Minimum design radii

Standard conveyors

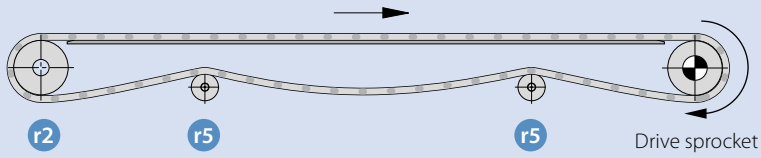

- r1 Side flex radius
- r2 Front flex radius
- r3 Load bearing roller
- r4 Hold Down shoe
- r5 Back flex roller

Centre drive conveyors

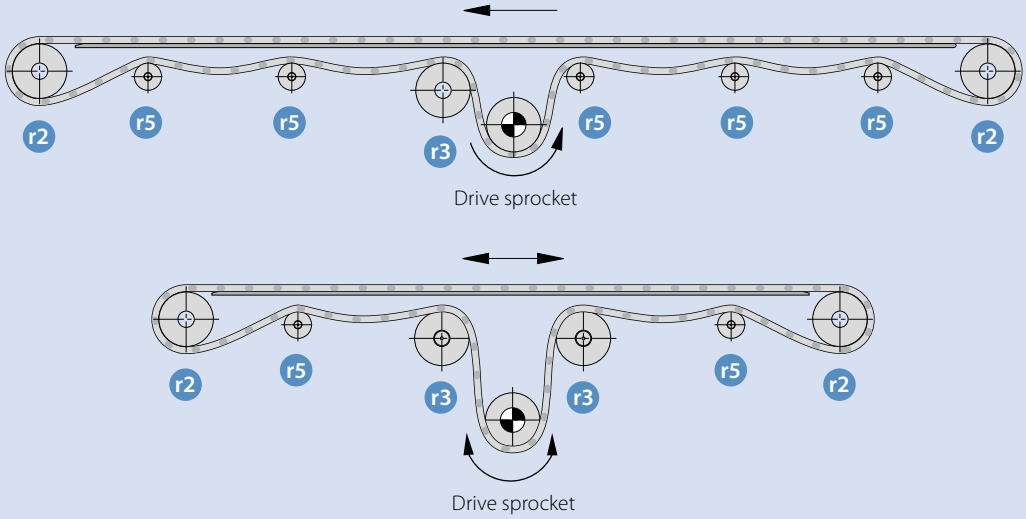

Inclined conveyors

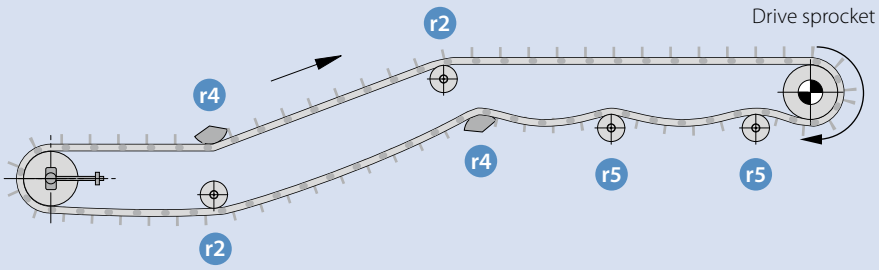

Nose bar conveyors

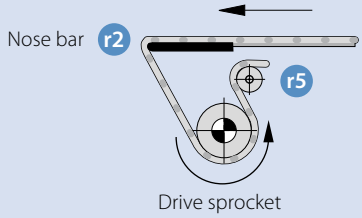

Curve conveyors

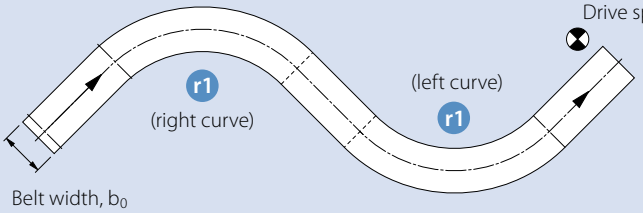

Belt types	Pitch	Front flex radius* on rollers r2	Back flex radius on load bearing rollers r3	Back flex radius on Hold Down shoes r4	Back flex radius on rollers r5
S1-x FLT / NSK / FRT / SRS / RRB	2 in 50 mm	2 in 50 mm	4 in/100 mm	6 in 150 mm	2 in/50 mm
S1-PMU with SG **			6 in/150 mm		6 in/150 mm
S2-x FLT / GRT	1 in 25 mm	1 in 25 mm	2 in 50 mm	3 in 75 mm	1 in/25 mm
S2-57 RRB					2 in/50 mm
S2-x PMU with SG **					2 in/50 mm
S4.1-x FLT / NPY / NTP	0.55 in 14 mm	0.45 in 11 mm	1 in 25 mm	1.5 in 38 mm	0.5 in/12.5 mm
S4.1-0 FRT1					0.7 in/16.5 mm
S5-45 GRT / NTP / FRT	1 in 25 mm	1 in/25mm	2 in/50 mm	3 in 75 mm	1 in/25 mm
S5-45 PMU with SG **		1 in/25mm	3 in/75 mm		3 in/75 mm
S5-45 G / RG		2 in/50 mm	2 in/50 mm		1 in/25 mm
S6.1-x FLT / CTP / NPT / PRR	2 in 50 mm	2 in 50 mm	4 in/100 mm	6 in 150 mm	2 in/50 mm
S6.1-x PMU with SG **			6 in/150 mm		6 in/150 mm
S7-x FLT / NSK / FRT / SRS / PRR	1.6 in 40 mm	1.6 in 40 mm	3.2 in 80 mm	4.8 in 120 mm	1.6 in 40 mm
S8-x FLT / NSK / RAT / FRT / SRS / PRR	1 in 25 mm	1 in 25 mm	2 in 50 mm	3 in 75 mm	1 in/25 mm
S8.1-30 FLT GT					1.25 in/30 mm
S8-0 RTP A90 S8-0 PMU with SG **			3 in/75 mm		3 in/75 mm
S9-57 GRT / NTP	2 in 50 mm	2 in 50 mm	4 in/100 mm	6 in 150 mm	2 in/50 mm
S9-57 PMU with SG **			6 in/150 mm		6 in/150 mm
S9.1-57 GRT	2 in 50 mm	2 in 50 mm	4 in 100 mm	6 in 150 mm	2 in 50 mm
S10-x FLT / NTP / LRB / FRT1	1 in 25 mm	1 in 25 mm	2 in/50 mm	3 in 75 mm	1 in/25 mm
S10-0 PMU with SG **			3 in/75 mm		3 in/75 mm
S11-45 GRT / NTP / FRT S11/S5 combo	1 in 25 mm	1 in 25 mm	2 in 50 mm	6 in/150 mm 3 in/75 mm	1 in 25 mm
S13-x FLT / NPY / CTP	0.315 in 8 mm	0.118 in*** 3 mm***	0.6 in 16 mm	0.9 in 24 mm	0.3 in 8 mm
S14-x FLT	0.5 in 12.7 mm	0.38 in 9.5 mm	1 in 25.4 mm	1.5 in 38.1 mm	0.5 in 12.7 mm
S15-47 GRT / RSA	0.5 in 12.7 mm	0.25 in 6.4 mm	1 in 25.4 mm	1.5 in 38.1 mm	0.5 in 12.7 mm
S17-0 FLT / SRS	1 in 25 mm	1 in 25 mm	2 in 50 mm	3 in 75 mm	1 in 25 mm
S18-44 GRT (G) / FRT1 / HDK 2.2 / GRT 1.7	1 in 25 mm	1 in 25 mm	2 in 50 mm	3 in 75 mm	1 in 25 mm
S19-0 SRS	2.5 in 63.5 mm	2.5 in 63.5 mm	5 in 127 mm	7.5 in 190.5 mm	2.5 in 63.5 mm

Using larger radii than listed will reduce wear on belt, rollers and/or shoes.
Larger radii will also likely reduce noise levels and make the belt run more smoothly.

* Depending on the application (e.g. knife edge) smaller radii are possible -> speed, noise, conveying goods (jiggle)
** Back flex radius depends on profile height and distance
*** Knife edge/nose bar

6.3 ADDITIONAL TABLES

Load index

The following table shows the changes in load capacity between different materials and over all available series.

Straight running belts

Series	PA	PE	POM	PP
S1	–	60 %	133 %	100 %
S2	17 %	10 %	23 %	17 %
S4.1	33 %	10 %	33 %	17 %
S5	–	33 %	83 %	60 %
S6.1	100 %	43 %	100 %	60 %
S7	–	60 %	200 %	100 %
S8, S8.1	100 %	–	133 %	67 %
S8-0 RTP	–	–	67 %	–
S9, S9.1	80 %	40 %	100 %	73 %
S10-0 FLT, S10-0 NTP, S10-0 FRT1	–	20 %	67 %	27 %
S10-22 FLT	–	10 %	37 %	17 %
S10-36 FLT, S10-36 LRB	43 %	13 %	43 %	20 %
S11	50 %	–	50 %	30 %
S13	–	–	13 %	–
S14	–	22 %	80 %	30 %
S15	15 %	–	17 %	8 %
S17	–	–	107 %	60 %
S19	266 %	–	300 %	–
S19 (100)	566 %	–	600 %	–

Side flexing belts

Series	PA	PE	POM	PP
S5	–	–	100 %	56 %
S5 RG, S5 ST	–	–	117 %	67 %
S9, S9.1	124 %	–	156 %	89 %
S11	56 %	–	56 %	33 %
S18	–	–	89 %	56 %

General material data

Material	Coefficient of thermal expansion		Density ISO 1183	E-modulus ISO 527	Melting point ISO 11357		Electrical surface resistivity IEC60093
	$\left[\frac{mm}{m \cdot °C}\right]$	$\left[\frac{10^{-6}\ in}{in \cdot °F}\right]$	$\left[\frac{kg}{m^3}\right]$	[MPa]	[°C]	[°F]	[Ω]
PA/PA-FR	0.12	66.6	1120	3400	221	429.8	10^{14}
PA-HT	0.10	55.5	1360	10000	262	500	10^{13}
PBT	0.16	88.8	1300	2500	223	433.4	10^{13}
PE	0.21	116.7	964	1150	135	275	–
PE-I	0.21	116.7	960	1100	–	–	–
PE-MD	0.21	116.7	984	1100	–	–	–
PK (PLX)	0.11	174.6	1240	1650	220	428	10^{14}
POM	0.12	66.6	1410	2850	166	330.8	10^{14}
POM-HC	0.12	66.6	1410	2580	166	330.8	$< 10^{6}$
POM-CR	0.11	66.6	1410	2500	162	323.6	–
POM-MD	0.12	66.7	1476	2800	166	330.8	10^{12}
PP	0.15	83.3	905	1550	165	329	–
PP-MD	0.15	83.3	990	1500	–	–	–
PP-SW	0.10	83.3	910	1500	167	333	–
PXX-HC	0.15	83.3	1150	2000	165	329	$< 10^{3}$
TPC1	0.185	102.8	1240	310	212	413.6	10^{12}

Dimension deviation

Belt type	Belt material					
	PA	PA-HT	PE	POM	PP	PXX-HC
S1 - 0 FLT	–	1.10 %	– 0.35 %	– 0.75 %	0.00 %	0.00 %
S1 - 0 FRT1, NSK, SRS	–	–	–	– 0.75 %	–	–
S1 - 18 FLT	–	1.10 %	0.15 %	– 0.70 %	0.00 %	–
S2 - 0 FLT	–	–	– 0.20 %	– 0.30 %	0.25 %	–
S2 - 12 FLT	–	–	0.00 %	– 0.10 %	0.20 %	–
S2 - 0 FRT1	–	–	–	– 0.30 %	–	–
S2 - 57 GRT	–	1.30 %	– 0.20 %	– 0.20 %	0.20 %	0.20 %
S2 - 57 RRB	–	–	– 0.20 %	– 0.20 %	0.20 %	–
S4.1 - 0 FLT, FRT1	–	–	– 0.10 %	0.00 %	0.25 %	0.25 %
S4.1 - 0 NPY	–	–	– 0.10 %	0.00 %	0.25 %	–
S4.1 - 21 FLT	–	1.20 %	– 0.10 %	0.00 %	0.25 %	–
S4.1 - 21 NTP	–	–	– 0.10 %	0.00 %	0.25 %	–
S5 - 45 GRT	0.00 %	–	0.00 %	0.00 %	0.00 %	–
S6.1 - 0 CTP, NTP	–	–	– 0.65 %	– 0.65 %	0.00 %	–
S6.1 - 0 FLT	0.00 %	–	– 0.65 %	– 0.65 %	0.00 %	–
S6.1 - 21 FLT	–	–	– 0.50 %	– 0.50 %	0.00 %	–
S6.1 - 23 FLT	0.83 %	–	– 0.50 %	– 0.50 %	0.00 %	–
S6.1 - 36 FLT	–	–	– 0.50 %	– 0.50 %	0.00 %	–
S7 - 0 FLT	–	–	– 0.35 %	– 0.75 %	0.00 %	– 0.13 %
S7 - 0 FRT1	–	–	– 0.35 %	– 0.75 %	0.00 %	–
S7 - 0 NSK, SRS	–	–	–	– 0.75 %	–	– 0.13 %
S7 - 6 FLT	–	–	0.00 %	– 0.70 %	0.00 %	–
S7 - 6 NSK	–	–	–	– 0.70 %	–	–
S8 - 0 FLT	–	1.49 %	– 0.31 %	– 0.31 %	0.00 %	0.00 %
S8 - 0 FRT1	–	–	–	– 0.31 %	0.00 %	–
S8 - 0 NSK, SRS	–	–	–	– 0.31 %	0.00 %	0.00 %
S8 - 25 RAT	–	1.53 %	– 0.31 %	– 0.61 %	0.00 %	–
S8.1 - 30 FLT	–	–	– 0.31 %	– 0.58 %	0.00 %	–
S8 - 0 RTP A90	–	–	–	– 0.31 %	–	–
S9 - 57 GRT	0.00 %	–	0.00 %	0.00 %	0.00 %	–
S9.1 - 57 GRT	–	–	–	0.00 %	–	–
S10 - 0 FLT	0.74 %	–	0.00 %	0.00 %	0.26 %	–
S10 - 0 NTP, FRT1	–	–	0.00 %	0.00 %	0.26 %	–
S10 - 22 FLT	–	–	0.00 %	0.00 %	0.26 %	–
S10 - 36 FLT	0.74 %	–	0.00 %	0.00 %	0.26 %	–
S10 - 36 LRB	–	–	0.00 %	0.00 %	0.26 %	–
S11 - 45 GRT	0.60 %		–	0.00 %	0.20 %	–
S13 - 0 FLT, NPY, CTP	1.38 %	–	–	0.23 %	–	0.89 %
S13 - 34 FLT	1.38 %	–	–	0.23 %	–	–
S14 - 0 FLT	–	–	– 0.13 %	0.00 %	0.43 %	–
S14 - 25 FLT	0.92 %	–	– 0.13 %	0.00 %	0.43 %	–
S14 - 25 CUT	–	–	–	0.00 %	0.43 %	–
S14 - 25 FRT1	–	–	–	–	0.00 %	–
S15 - 47 GRT, RSA	0.40 %	–	–	– 0.40 %	– 1.00 %	–
S17 - 0 FLT	–	–	–	– 0.09 %	0.35 %	–
S17 - 0 SRS	–	–	–	–	–	0.35 %
S18 - 44 GRT 2.2	0.85 %	–	–	– 0.10 %	0.50 %	–
S18 - 44 HDK	0.85 %	–	–	– 0.10 %	0.50 %	–
S18 - 44 GRT 1.7	–	–	–	– 0.10 %	0.50 %	–
S18 - 44 FRT1 2.2	–	–	–	–	0.50 %	–
S19 - 0 SRS	0.28 %	–	–	– 0.10 %	–	–

6.3 ADDITIONAL TABLES

Dimension tolerance

Belt Series	Tolerance
S1, S2, S4.1, S6.1, S7, S8, S10, S13, S14, S15, S17, S18, S19	±0.2 %
S5, S9, S9.1, S11	±0.3 %

Example:

S6.1-23 in POM with nominal width of 600 mm	S6.1-23 in POM with nominal width of 23.62 in
Deviation:	
– 0.5 %: 600 · (1 – 0.005) = 597 mm	23.62 · (1 – 0.005) = 23.50 in
Tolerance:	
± 0.2 %: 600 · 0.002 = 1.2 mm	23.62 · 0.002 = 0.05 in
Actual belt width:	
597 ± 1.2 mm	23.50 ± 0.05 in

Drainage capacity/flow rate of Prolink belts

The percentage of open area for Siegling Prolink belts and modules is shown in the nomenclature e.g. S6.1-36 FLT or S8-25 RAT. Also, chapter 1.2 ("Detailed series information") of the PEM shows the percentage of open area for each available surface pattern. More detailed information on the belt opening is shown in the surface pattern dimensions.

The percentage of open area refers to how much light passes through. It is calculated by the relation of the open to the closed surface area, using a representative belt section of the CAD model. This theoretical value gives the possibility to compare the different Siegling Prolink series according the open area.

The real permeability or drainage capacity of a belt is related to the "FLOW RATE" of the medium through the belt. This "drainage capacity" will be influenced by the percentage of open area, but also by the flow of the fluid, and the modules roundings and gaps.

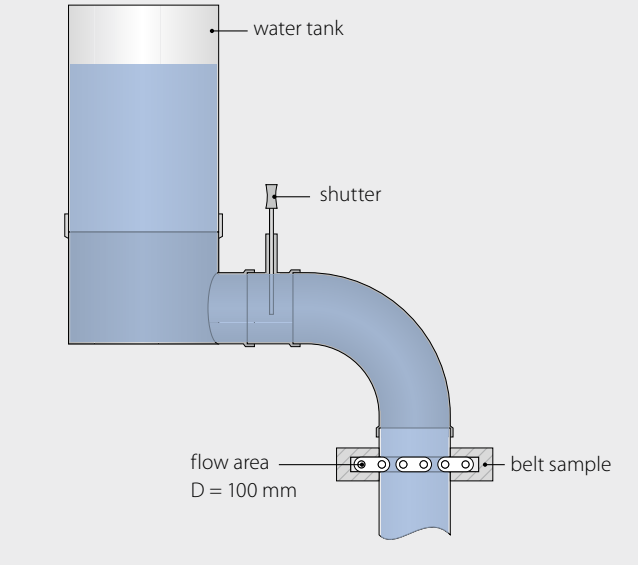

For this reason, Forbo Siegling has developed a drainage test for modular belts. The published "FLOW RATE" is defined in liters per second (l/s) and will support our customer when choosing the right belt for a water drainage application. (Custom testing with other fluids is possible.)

Test setup:

- Representative belt area (real sample, stretched)
- Large volume of water (> 50 l)
- Defined flow area (D = 100 mm -> 78.5 cm^2 [D = 3.94 in -> 12.2 in^2])
- Time measurement by video analysis (when the fluid flow is constant, the time for 50 l water volume to flow will be measured)
- Comparison tests (same settings for all tests)

Test results:

- Diagram 1 shows the average flow rate for different Siegling Prolink belt types.
- The maximum flow rate of the test set-up is 18.3 l/s -> without a belt.
- "Closed series" have the lowest flow rate, but they are water permeable.
- A food series with smooth rounded surfaces like S6.1-36 and S10-36 shows a high flow rate (12.4 – 12.8 l/s).
- The curve belts S5-45 GRT and S9-57 GRT are tested as straight running samples. The flow rate of S5-45 GRT is not in line with the percentage of open area, which may be due to turbulent water flow caused by the elongated holes.

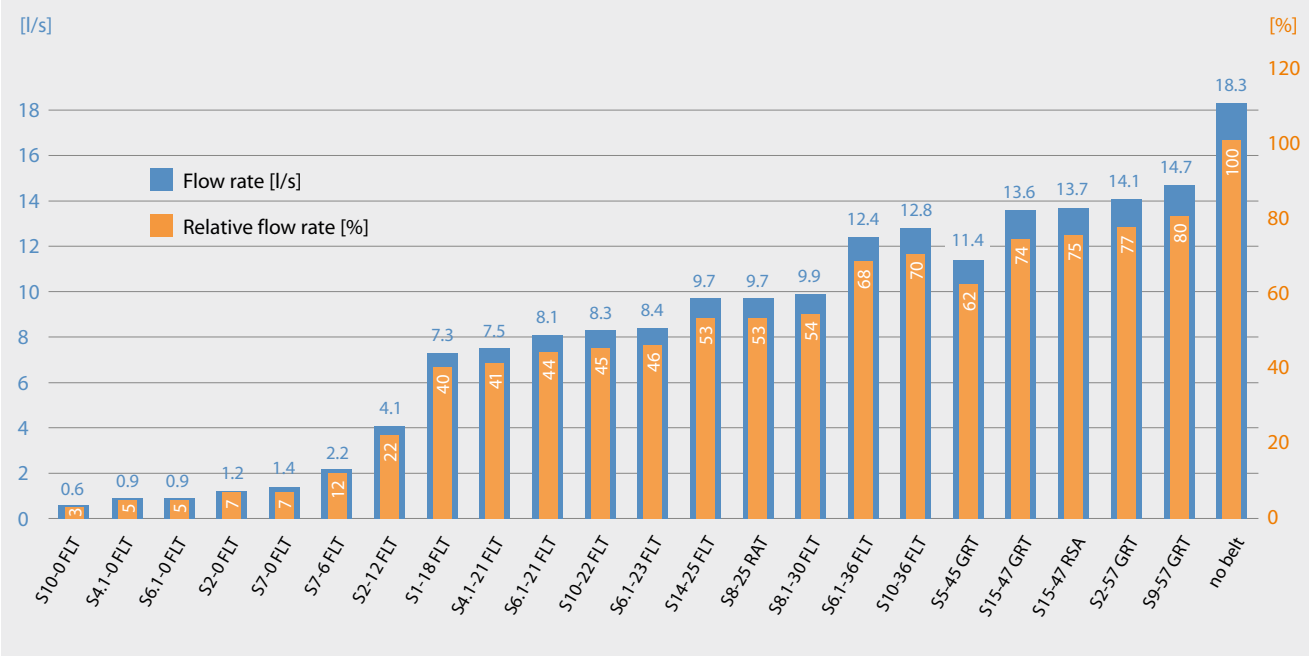

6.4 CONVERSION TABLE METRIC/IMPERIAL

Metric	Multiply	Imperial	Multiply	Metric
Length				
millimeter	0.03937	inch	25.4	millimeter
meter	39.37	inch	0.0254	meter
millimeter	0.0033	foot	304.8	millimeter
meter	3.281	foot	0.3048	meter
Area				
square millimeter	0.00155	square inch	645.2	square millimeter
square meter	1550	square inch	0.000645	square meter
square millimeter	0.00001	square foot	92.903	square millimeter
square meter	10.764	square foot	0.0929	square meter
Volume				
cubic meter	35.31	cubic foot	0.0283	cubic meter
liter	0.0353	cubic foot	28.32	liter
Speed				
meter/min	0.0547	foot/second	18.29	meter/min
meter/min	3.281	foot/minute	0.3048	meter/min
Mass and Density				
kilogram	2.205	pound	0.4536	kilogram
kilogram/cubic meter	0.0624	pound/cubic foot	16.02	kilogram/cubic meter
Force				
kilogram-force	2.204	pound-force	0.4537	kilogram-force
newton	0.225	pound-force	4.448	newton
Torque				
Newton meter	88.512	inch pound	0.113	Newton meter
Power				
watt	0.00134	horsepower	745.7	watt
Pressure				
kilogram/square meter	0.00142	pound/square inch	703.072	kilogram/square meter
Temperature				
°C	$9 \cdot \left(\frac{°C}{5}\right) + 32°$	°F	$\frac{5}{9} \cdot (°F - 32°)$	°C

6.5 ASSEMBLY INFORMATION

Assembly Retainer Rings



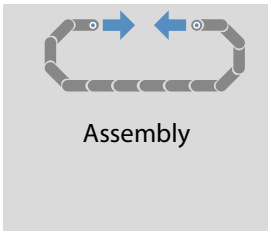

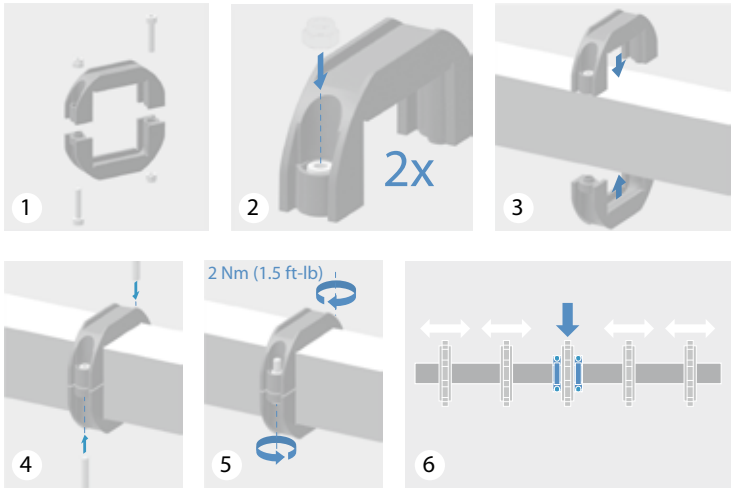

Assembly Split Sprockets

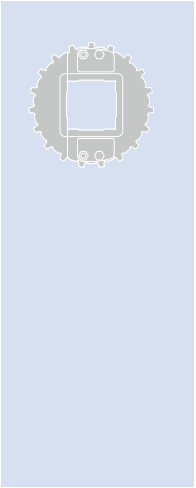

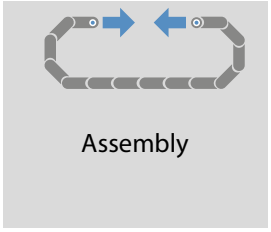

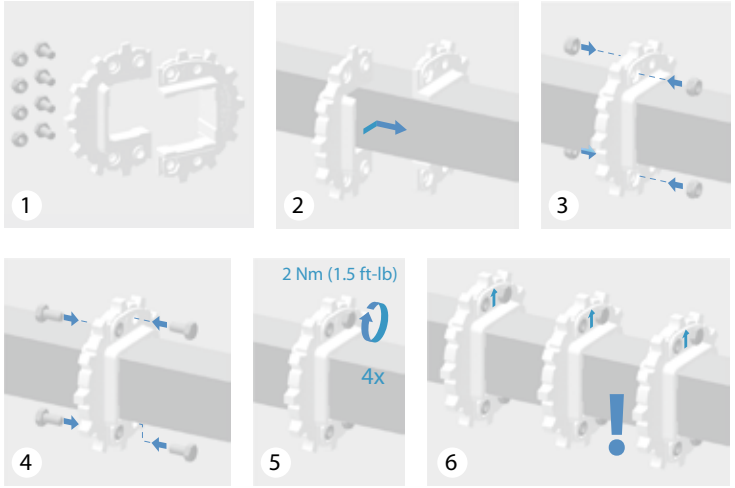

6.6 QUESTIONNAIRE

See following pages

Bent profiles – Specification sheet

siegling prolink
modular belts

Please fill in the orange colored fields and add this document to your order in SAP

Company

Base profile used

Art. #	Description

SAP Nomenclature (only relevant in case inventory is needed)

Art. #	Description
98xxxx99	"base profile #" @xxx h_s/h1/h2 MM

Bending details

Designation	Description	Dimensions	Constrains
@	Bending angle from vertical		0° to 90°
h_s	Final total height above base		
h1	Height of bending point		> 54 – h_m
h2	Length of the bent section		> 19 mm

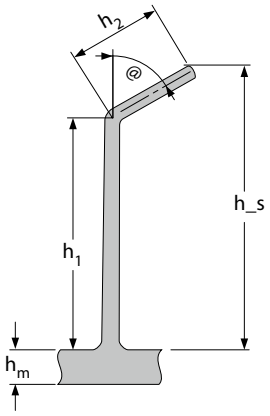

Example

Base profile used

Art. #	Description
98088499	S6.1-0 FLT PMU PP-HA WT H100 W200

SAP Nomenclature (only relevant in case inventory is needed)

Art. #	Description
98xxxx99	98088499 @55 75/40/60 MM

Bending details

Designation	Description	Dimensions	
@	Bending angle from vertical	55°	
h_s	Final total height above base	75 mm	
h1	Height of bending point	40 mm	
h2	Length of the bent section	60 mm	

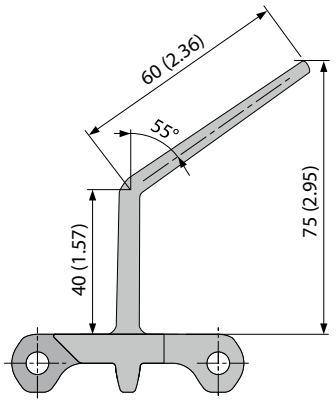

Forbo
MOVEMENT SYSTEMS

Application check list

siegling prolink
modular belts

Name: _____ Date: _____

Customer data

Company/Customer name: _____ Contact person: _____
Customer type (x): ☐ OEM ☐ Dealer/Distributor ☐ End user
End user name: _____

Application data

Industry: _____

Application: _____

Conveyed product: _____

Wrapping/Container (x):
☐ Non ☐ Cardboard ☐ Plastic container
☐ Shrink wrapped ☐ Flow pack ☐ Wood
☐ Glass ☐ Steel cans ☐ Alu cans
☐ Steel trays ☐ Plastic trays ☐ Strapped
☐ Other _____

Item size: ☐ mm ☐ Inch

LxWxH: _____ Ø x H: _____

Load (delete incorrect units): _____ kg/item or lb/item
_____ kg/m or lb/ft _____ kg/m² or lb/ft²

Throughput (delete incorrect units):
_____ item/min _____ kg/min or lb/min

Belt speed: _____ m/min or ft/min

Conveyor layout

Distance between shafts: C-C: _____ mm/In

Top view: ☐ Straight ☐ Side flexing/curved conveyor

Side view: ☐ Straight ☐ Incline ☐ Decline
Angle to horizontal: _____ °

Start/stop operation:
☐ No (continuous drive) ☐ Yes nos. of stop/hour: _____
☐ Product indexing _____

Accumulation:
☐ No ☐ Full ☐ Partly, length: _____

Operating temperature:
Minimum: _____ C°/F° Normal: _____ C°/F°
Maximum: _____ C°/F°

Is the belt lubricated?
☐ No ☐ Yes, type _____

Is the belt exposed to chemicals during operation?
☐ No ☐ Yes, type _____

Is the belt exposed to chemicals during cleaning?
☐ No ☐ Yes, type _____

Belt data

☐ New belt ☐ Retrofit Original belt from: _____
Belt type: _____ Belt pitch: _____ mm/In
Belt color: _____

Belt material:
☐ POM ☐ PP ☐ PE ☐ PA
☐ Other: _____

Pin material:
☐ POM ☐ PP ☐ PE ☐ PA
☐ Stainless steel ☐ Steel ☐ Other: _____

Pin retention system:
☐ Clips ☐ Integrated in pin ☐ Other: _____

Belt configuration:
Belt length: _____ mm/In Belt width: _____ mm/In

Top accessories (like Profiles):
Type & height: _____ Side indent: _____ Pitch: _____

Side accessories (like SG):
Type & height: _____ Side indent: _____

Sprocket data

Drive shaft:
Size: z = _____ per shaft: _____ pcs
Pitch diameter: _____ mm/In "A" dimension: _____ mm/In
Bore type: ☐ ● ☐ ● + keyway ☐ ■
Bore size: _____

Idler shaft:
Size: z = _____ per shaft: _____ pcs
Pitch diameter: _____ mm/In "A" dimension: _____ mm/In
Bore type: ☐ ● ☐ ● + keyway ☐ ■
Bore size: _____

Wearstrip/Wearbed data

Material:
☐ PE HD 1000/UHMW PE ☐ PE HD 500/HMW PE
☐ Stainless steel ☐ Other: _____

Configuration:
☐ Wear strips size (WxT): _____ Spacing: _____
☐ Herringbone size (WxT): _____ Spacing: _____
☐ Solid sheet/full belt support ☐ Other: _____

Forbo MOVEMENT SYSTEMS

Name: _____ Date: _____

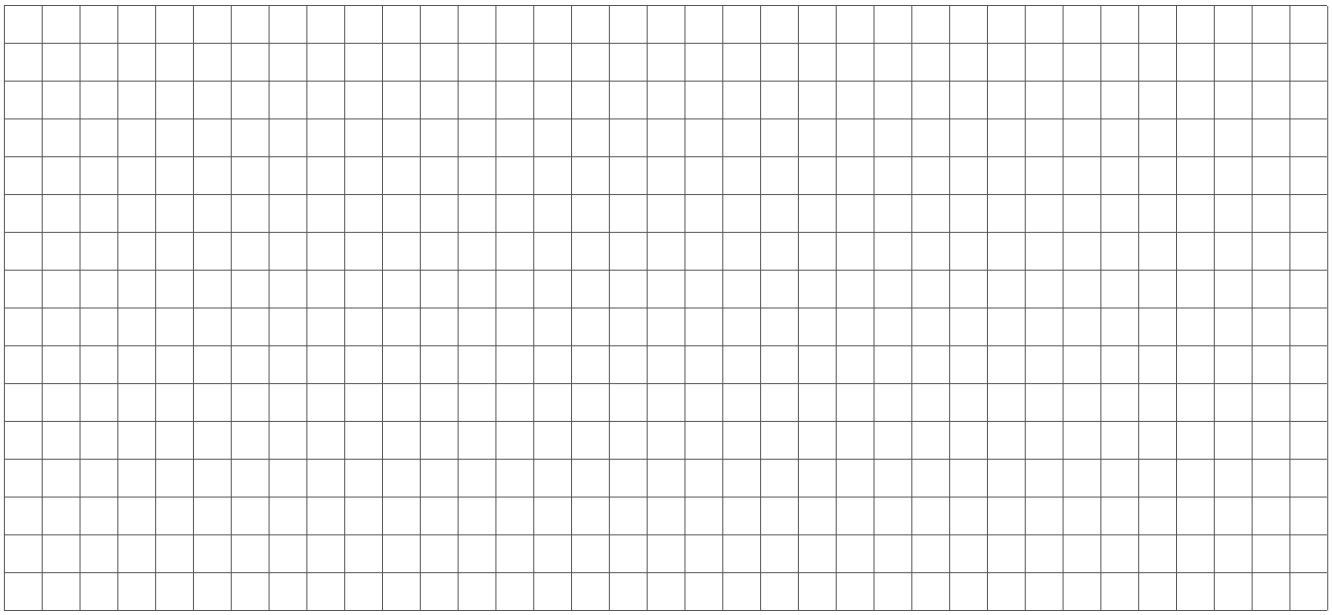

Sketch of conveyor, stating travel direction and location of drive motor.

Are there currently reports of any problems with this application? ☐ No ☐ Yes, please describe:

_____

_____

_____

_____

_____

What is the main reason for the customers interest in a new belt?

☐ New application/New conveyor

☐ New demands on existing conveyor, please describe: _____

Current belt is showing:

☐ Significant wear, age of existing belt: _____ year(s)

☐ Significant breakages, cause of breakages: _____

☐ Brittleness/aging/chemical degradation

Additional data or information:

_____

_____

_____

_____

_____

_____

Forbo Siegling GmbH
Lilienthalstraße 6/8, D-30179 Hannover
Phone +49 511 6704 0
www.forbo-siegling.com, siegling@forbo.com

MOVEMENT SYSTEMS

Spiral data form

siegling prolink
modular belts

Name: _____ Date: _____

Customer data

Company/Customer name: _____ Contact person: _____

Customer type: ☐ OEM ☐ Dealer/Distributor ☐ End user

End user name: _____

Spiral belt: ☐ New ☐ Retrofit

Application data

Product

Specify: _____

Product size: Max overall dimensions product or packing

Length l_p: _____ mm _____ in

Width b_p: _____ mm _____ in

Height h_p: _____ mm _____ in

Weight m_p per unit: _____ g _____ lbs

Packing ☐ None ☐ On tray, pan ☐ In box

Packing material (e.g. in poly bags): _____

Weight $_{Packing}$ per unit: _____ g _____ lbs

Product properties

☐ Soft, delicate ☐ Wet ☐ Fatty, sticky

☐ Crumbly ☐ Other: _____

Product arrangement on belt at in feed:

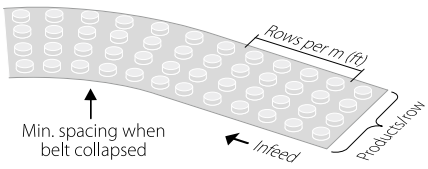

Number of products per row n_r: _____ prod./row

Number of rows of belt n_l: _____ rows/m _____ rows/ft

Max product load on belt: _____ kg/m _____ lbs/ft

Or define on collapsed belt: _____

Min gap between products: _____ mm _____ in

☐ Products not ordered (weight reasonably distributed)

☐ Products in heaps (weight concentrations)

Required Accessories:

☐ Side guards ☐ Lane dividers

Process

☐ Freezer ☐ Cooler ☐ Proofer

☐ Other: _____

Process conditions

Temperature: _____ °C _____ °F

Rel Humidity: _____ %

Air circulation

☐ No circulation ☐ No directional air flow

☐ Forced circulation ☐ High air velocity

Product parameters

Temperature infeed: _____ °C _____ °F

Temperature outfeed: _____ °C _____ °F

Operating parameters

Dwell time: _____ min

Max belt speed v: _____ m/min _____ ft/min

Production output

Production rate: _____ units/h

Throughput (capacity): _____ kg/h _____ lbs/h

Operating conditions

Electrical control of belt & drum drive:

☐ Direct start of belt & drum drive

☐ Soft start (over frequency converters)

Production:

☐ Continuous, few changes

☐ Frequent product & speed changes

Cleaning

☐ No periodical cleaning ☐ Not specified

Cleaning process

☐ Only dry with brush, aspirator ☐ Wet cleaning

☐ Cleaning system installed ☐ High pressure

Cleaning conditions

☐ Water cold (< 32 °C/90 °F) ☐ Water hot (> 33 °C/91 °F)

☐ Water – Steam (100 °C/212 °F) ☐ Other: _____

Use of chemicals

☐ No chemicals used ☐ Usual household cleaners

☐ Use of cleaning agents/disinfectants (brand, type, name):

_____

Cleaning cycle

☐ Daily ☐ Weekly ☐ Other: _____

Cleaning duration

☐ Up to 1h ☐ 1 to 3h ☐ Other: _____

Forbo
MOVEMENT SYSTEMS

Spiral layout

Type and configuration

☐ Single unit
☐ Upgoing ☐ Downgoing

Direction of rotation:
☐ Clockwise ☐ Counter-clockwise

Angle between In- and Outrun:
☐ 0° (Straight) ☐ 90°

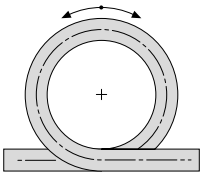

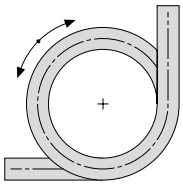

☐ 180° ☐ 270°

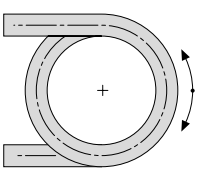

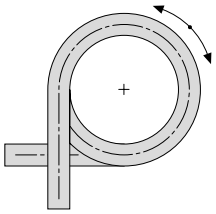

☐ Double unit
☐ Up-downgoing ☐ Down-upgoing

Disposition crossover (transfer-conveyor)
☐ Straight ☐ Diagonal

Indicate running direction (fix In-& Outrun-side)
☐ From A (= Inrun) to B ☐ From B (= Inrun) to A

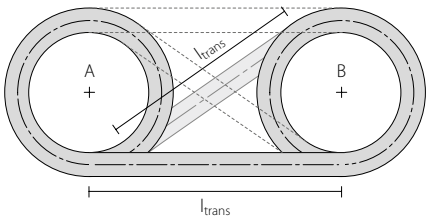

Indicate position of In- and Outrun with 1 to 8

Inrun: Position _____ Outrun: Position _____

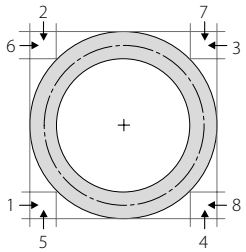

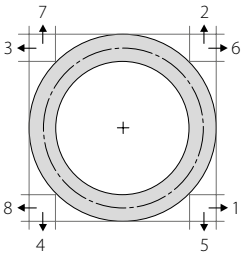

Remark: If configuration not given above sketch on separate sheet!

Main dimensions of spiral

Double Spirals have generally same dimensions; if Spiral A not identical B -> Indicate both dimensions first A/second B

Drum/Cage-Diameter D_i: _____ mm _____ in
Belt width b_o: _____ mm _____ in
Tier height h: _____ mm _____ in
Number of tiers n: _____
Inrun length l_{in}: _____ mm _____ in
Outrun length l_{out}: _____ mm _____ in

Take-up roller:
Free travel height h_c: _____ mm _____ in

Only for dual spirals:
Crossover length between spirals L_{trans}: _____ mm _____ in

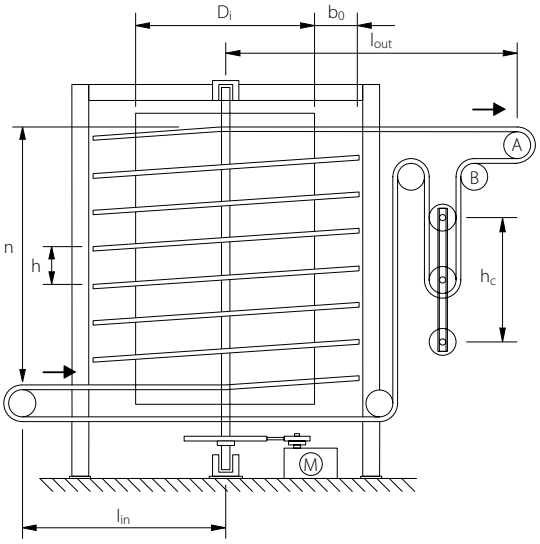

Drum design

☐ Drum cylinder made with metal sheet-jacket
☐ With closed sheets ☐ With perforated sheets
☐ Cage = Drum made of vertical bars
Spacing of vertical bars: _____ mm _____ in
Dimensions of bar profile: _____ mm _____ in
(Round -> d, square, rectangular s_1 x s_2)

Cage bars
☐ Without caps ☐ With caps; material: _____

Room dimensions (indicate if limited)

Available room max.
Length: _____ m _____ ft
Width: _____ m _____ ft
Height: _____ m _____ ft

MOVEMENT SYSTEMS

Retrofit data

Customer requirements/problem description

Indicate the reasons why the customer wants a refit.

Product problems

☐ Product marked ☐ Product sticks

Driving problems

☐ Belt jumps, jerky movement ☐ Outer belt edge lifts up

Sanitation problems

☐ Blackening, black spots ☐ Belt soiled with debris

Cleaning problems

☐ Frequent cleaning required ☐ Cleaning cycle too long

Lifetime too short

☐ Belt life time too short ☐ Excessive wear

Problem description:

Please describe current problems and also what the customer expects!

_____

_____

_____

Tentative time schedule

Realization planned for: _____

Spiral belt

Belt-type to be replaced

☐ Steel mesh belt ☐ Plastic modular belt

☐ Hybrid belt (SS & plastic)

Manufacturer

Company name: _____

Belt specification

Product name/code/type: _____

Pitch: _____ mm _____ in

Belt material: _____

Current condition of belt

☐ In good condition ☐ Belt worn, old

☐ Stretched, partly deformed ☐ Belt fractured, partly broken

Required accessories

☐ Friction modules ☐ Flights/Profiles

☐ Nub top ☐ Radius expansion tabs S9

Additional details: _____

Spiral conveyor

Current condition of spiral general impression

Manufacturer: _____

Year of construction: _____

☐ In good condition, clean ☐ weak, deformed

☐ Poor maintenance, dirty ☐ worn, damaged

Belt drive position

☐ A: Sprocket on belt backside ☐ B: Sprocket on belt topside

Carry way: Belt support

Number of belt supports x: _____

Spacing between supports b_1: _____ mm _____ in

Distance belt edge – outside support b_a: _____ mm _____ in

Support-rail thickness s_r: _____ mm _____ in

Support-rail height h_r: _____ mm _____ in

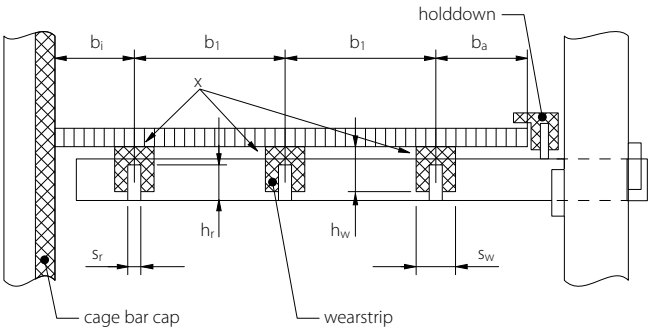

Wear strips (carry way)

Profile:

Height h_w: _____ mm _____ in

Width s_w: _____ mm _____ in

Material:

☐ HDPE or UHMW (min PE 500) ☐ Other: _____

Condition:

☐ In good condition, usable

☐ Needs immediate replacement

Remark cage bars: Please fill in position "drum design" on previous page.

Cage bar caps

Profile: _____

Material:

☐ HDPE or UHMW (min PE 500) ☐ Other: _____

Condition:

☐ In good condition, usable ☐ Worn, scratched

☐ With defects (gaps, gauges, etc)

Hold downs

☐ No hold downs installed ☐ Safety belt flip up present

Location:

☐ Outside belt edge ☐ Inside belt edge

Type:

☐ Continuous guide ☐ Several shoes

Take-up roller: Please see spiral sketch on previous page.

Compensation for belt elongation

Number of take-up rollers: _____

If design differs from "Main dimensions of spiral" on previous page:

Estimate compensation way: _____ m _____ ft

Forbo Siegling GmbH
Lilienthalstraße 6/8, D-30179 Hannover
Phone +49 511 6704 0
www.forbo-siegling.com, siegling@forbo.com

MOVEMENT SYSTEMS

6.7 NOTES

6.8 LEGAL NOTES

Forbo Siegling GmbH ("Forbo") provides this Engineering Manual for information purposes only. While Forbo endeavors that its recommendations, operating instructions, details and information on suitability and use of our products are as accurate and complete as possible, Forbo does not make any representation or warranty of any kind whatsoever, neither expressed nor implied, with respect to any information contained in this Engineering Manual unless otherwise expressly set forth in writing by duly authorized representatives of Forbo. It is your sole responsibility to perform appropriate testing of our products and their merchantability and fitness for a particular purpose, and Forbo does not accept any liability for any damages, including but not limited to property damages and personal injury, in connection with your reliance on any information contained in this Engineering Manual or any technical and/or other support which Forbo may have provided to you.

This Engineering Manual is Forbo property. Any reproduction, transmission or other use of this Engineering Manual or part(s) thereof is only permissible with Forbo's written consent.

Forbo reserves the right to modify the content of this Engineering Manual at any time and without prior notice to you. The latest version of this Engineering Manual can be downloaded from our website at www.forbo.com/movement/en-gl/.

Siegling – total belting solutions

Committed staff, quality oriented organization and production processes ensure the constantly high standards of our products and services.

Forbo Movement Systems complies with total quality management principles. Our quality management system has ISO 9001 certification at all production and fabrication sites. What's more, many sites have ISO 14001 environmental management certification.





Our service – anytime, anywhere

Forbo Movement Systems employs around 2,300 people in its group of companies. Our products are manufactured in ten production facilities across the world.
You can find companies and agencies with warehouses and workshops in over 80 countries.
Service points are located in more than 300 places worldwide.

Forbo Siegling GmbH
Lilienthalstrasse 6/8, D-30179 Hannover
Phone +49 511 6704 0
www.forbo-siegling.com, siegling@forbo.com

MOVEMENT SYSTEMS

Ref. no. 888-2
05/26 · GB · Reproduction of text or parts thereof only with our approval. Subject to change.